公司简介 COMPANY PROFILE

天津市百利纽泰克电气科技有限公司坐落于天津市北辰科技园区，公司占地 32000 平方米，建筑面积 20000 平方米,是上市公司-天津百利特精电气股份有限公司（股票简称：百利电气；股票代码：600468）的控股子公司。公司是天津市市级技术中心，拥有 40 多人的研发和技术队伍，占员工总数的 15%，多年以来被认定为天津市高新技术企业，拥有国内领先的干式、油浸式变压器，干式、浇注、油浸式互感器，数字式多功能电力仪表等产品的研制、生产能力。

公司引进先进的高精度自动纠偏低压箔绕机、高压自动排线机、线圈整形机、折边机、自带 90° 翻转功能的装配台、环氧树脂真空浇注设备、器身干燥系统、真空滤油机等多台变压器的生产制造设备和变压器综合测试仪等检测设备。生产 S9、S11、S13、SBH15、SCB10、SCB11、SCB13、SCBH15 系列油浸式变压器、干式变压器、非晶合金油浸式变压器、非晶合金干式变压器、有载调压变压器、低压无功补偿专用电抗器、干式铁心并联/串联电抗器等。公司致力于生产高品质、低损耗、低噪音、节能、环保、安全的变压器，产品广泛适用于农村乡镇用电、城市居民生活用电、工矿企业等环境中。如：机场、地铁、发电厂、高层建筑、居民密集区等各种场所，也可和开关柜组成箱式变电站。

公司引进德国 MWB 公司 6-35kV 环氧树脂绝缘浇注电压、电流互感器技术及生产试验设备，引进瑞士具有世界先进水平的高压试验检测设备；先进的多功能电表全自动误差试验系统、高温老化系统等。生产 0.5kV 至 220kV 各种型号干式、浇注和油浸户内、户外互感器，数字式多功能电力仪表等。公司产品是天津市名牌产品，注册商标被认定为天津市著名商标。产品精度等级高，性能稳定，安全可靠，外型美观。产品符合 IEC 标准及国家标准，其中部分产品荣获国家级新产品称号，企业通过了 ISO9001:2015 质量管理体系认证和 ISO14001:2015 环境管理体系认证。

公司将以“高速、高效、创新、求实”的企业精神，以卓越的产品性能，可靠的品质保证，周到的售前、售后服务，不断创新的产品，回报社会、回报股东及广大客户的厚爱。

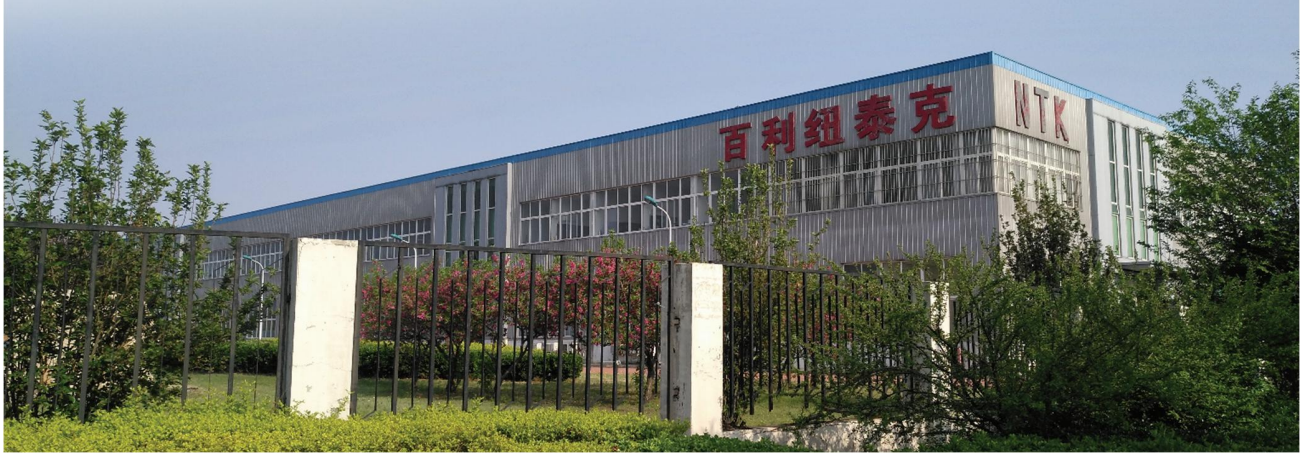

此页为正本扫描

KNOW-HOW CONTRACT
FOR
6-35 KV EPOXY CAST-RESIN INSULATED INDUCTIVE INSTRUMENT TRANSFORMERS FOR INDOOR USE
CONTRACT NO:85 BMD 200/025 CD

户内 6–35KV 树脂浇注绝缘感应式互感器专有技术合同

合同号：85BMD200／025CD

THE BUYERS
CHINA NATIONAL MACHINERY & EQUIPMENT
IMPORT AND EXPORT CORPORATION
TIANJIN BRANCH

Continued overleaf

THE SELLERS
MWB MESSWANDLER-BAU AG
Nürnberger Straße 198 · D-8600 Bamberg/West Germany
Telefon 0951/9623-0 · Telex: 17 951 108 · Telefax: 851 108

引进德国MWB技术协议

中华人民共和国
制造计量器具许可证

MC

津制 00000318 号

生产地址：天津市北辰区科技园区环外拓展区高新大道 68 号

天津市百利纽泰克电气科技有限公司

根据《中华人民共和国计量法》的规定，对你单位制造下列计量器具的生产条件、产品质量和计量法制管理考核合格，特发此证。

序号	计量器具名称	型号	规格	准确度
1	电流互感器	(0.5-220) KV (10-5000) / (5,1) A		0.2S、0.2、0.5S、0.5级
2	精密电流互感器	(5-10000) /(5, 1)A		0.02、0.05级
3	电压互感器	(0.5-220) KV		0.2、0.5级
4	精密电压互感器	(3-35) KV		0.05级

（以下空白）

发证单位（盖章）：

发证日期：2016 年 08 月 21 日

有效日期：2019 年 08 月 20 日止

DNV·GL

MANAGEMENT SYSTEM CERTIFICATE

Certificate No:
6426-1998-AQ-RGC-RvA

Initial certification date:
02 December, 1998

Valid:
02 December, 2017 - 02 December, 2020

This is to certify that the management system of

Tianjin Benefo New Technic Electric Technology Co., Ltd.

No. 68 Gaoxin Avenue, the Extended Area Beyond the External Circle, Science and Technology Park, Beichen District, Tianjin, China (Unicode: 91120116103467164F)

has been found to conform to the Quality Management System standard:
ISO 9001:2015/GB/T 19001-2016

This certificate is valid for the following scope:

Design and Manufacture of 0.5-220KV Voltage Transformers and Current Transformers, Dry Type Transformers and Oil-immersed Type Transformers Ranged 35KV and Below.

Place and date:
Shanghai, 29 November, 2017

MEMBER OF MULTILATERAL RECOGNITION ARRANGEMENT IAF
MGMT. SYS.
RvA C 024
The RvA is a signatory to the IAF MLA

For the issuing office:
DNV GL – Business Assurance
Suite A, Building 9, No.1591 Hongqiao Road, Changning District, Shanghai 200336, P.R. China
TEL: +86 21 32799000

Chen Yi
Management Representative

Lack of fulfilment of conditions as set out in the Certification Agreement may render this Certificate invalid. This certificate shall remain valid only after the certified organization has passed surveillance audit.
ACCREDITED UNIT: DNV GL BUSINESS ASSURANCE B.V., ZWOLSEWEG 1, 2994 LB, BARENDRECHT, THE NETHERLANDS. TEL: +31102922689.
www.dnvgl.com
THE VALIDITY OF THE CERTIFICATE CAN BE CHECKED THROUGH THE CNCA WEBSITE IN CHINA: HTTP://WWW.CNCA.GOV.CN

DNV·GL

MANAGEMENT SYSTEM CERTIFICATE

Certificate No:
73495-2010-AE-RGC-RvA

Initial certification date:
10 March, 2010

Valid:
28 November, 2017 - 10 March, 2019

This is to certify that the management system of

Tianjin Benefo New Technic Electric Technology Co., Ltd.

No. 68 Gaoxin Avenue, the Extended Area Beyond the External Circle, Science and Technology Park, Beichen District, Tianjin, China

has been found to conform to the Environmental Management System standard:
ISO 14001:2015

This certificate is valid for the following scope:

Design and Manufacture of 0.5-220KV Voltage Transformers and Current Transformers.

Place and date:
Shanghai, 29 November, 2017

MEMBER OF MULTILATERAL RECOGNITION ARRANGEMENT
IAF
MGMT. SYS.
RvA C 024
The RvA is a signatory to the IAF MLA

For the issuing office:
DNV GL – Business Assurance
Suite A, Building 9, No.1591 Hongqiao Road, Changning District, Shanghai
200336, P.R. China
TEL: +86 21 32799000

Chen Yi
Management Representative

Lack of fulfilment of conditions as set out in the Certification Agreement may render this Certificate invalid.
ACCREDITED UNIT: DNV GL BUSINESS ASSURANCE B.V., ZWOLSEWEG 1, 2994 LB, BARENDRECHT, THE NETHERLANDS. TEL: +31102922689
www.dnvgl.com

高新技术企业

证书

企业名称：天津市百利纽泰克电气科技有限公司

证书编号：GR201712000540

发证时间：2017年10月10日

有 效 期：三年

批准机关：

天津市名牌产品证书

天津市百利纽泰克电气科技有限公司

经天津市人民政府批准，授予你单位生

产的 图形 牌 互感器 “天津市名牌产

品”称号。

天津市质量工作领导小组

（有效期2014年至2017年）


天津市认定
企业技术中心
天津市经济委员会 天津市科学技术委员会
天津市财政局 天津市地方税务局

目录

一、户内浇注电流互感器

10kv 电流互感器

CMZ-10Q/210 套管

技术参数
Technical data

1. 产品性能符合标准 GB 20840.1-2010、GB 20840.2-2014 和 IEC 61869-1：2007、IEC 61869-2：2012 及顾客特殊要求
   The products accord with the standards of GB 20840.1-2010、GB 20840.2-2014 and IEC 61869-1：2007、IEC 61869-2：2012 and some special demands.
2. 额定绝缘水平 12/42/75kV
   Rated insulation level 12/42/75kV
3. 额定频率 50Hz 或 60Hz
   Rated frequency 50Hz or 60Hz
4. 环境温度 -5℃~+40℃
   Ambient temperature -5℃~+40℃
5. 污秽等级 Ⅱ
   Pollution class Ⅱ

型号 Type	规格 Size（mm）
CMZ-10Q/210	Φ150×235/80×10

外形尺寸图
Overall dimensions

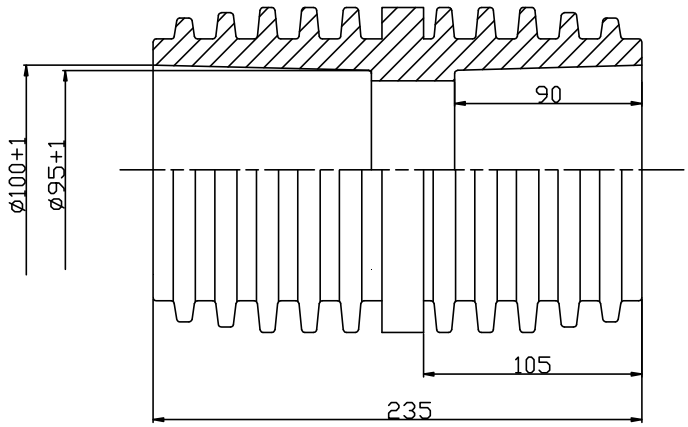

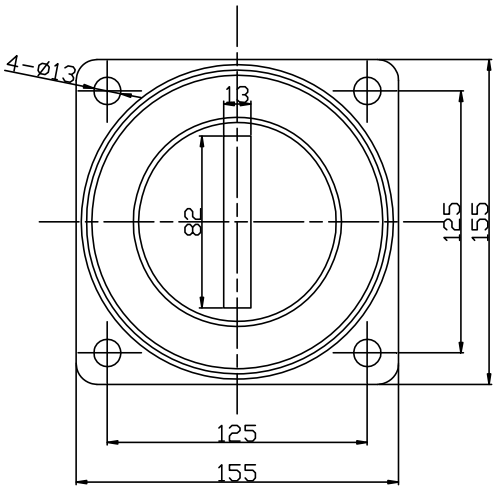

净重（Weight）：3.5kg

LAJ1-10, LAJ1-10Q 电流互感器

型号 Type	额定一次电流 Rated primary current (A)	准确级组合 Accuracy classes combination	额定输出 Rated output (VA)	额定短时热电流 Rated short-time thermal current (kA/1s)	额定动稳定电流 Rated dynamic current (kA)
LAJ1-10 LAJ1-10Q	400	0.2/0.2	20/20	30	75
		0.2/0.5	20/25		
		0.5/10P15	25/15		
	500	0.2/0.2	20/20	30	75
		0.2/0.5	20/25		
		0.5/10P15	25/15		
	600～800	0.2/0.2	20/20	50I1n	125I1n
		0.2/0.5	20/25		
		0.5/10P15	25/20		

外形尺寸图
Overall dimensions

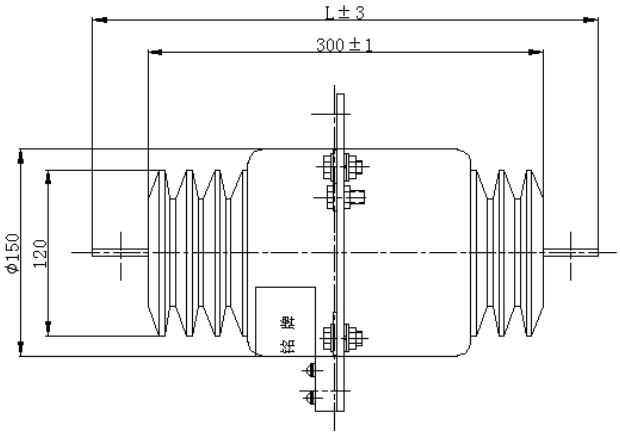

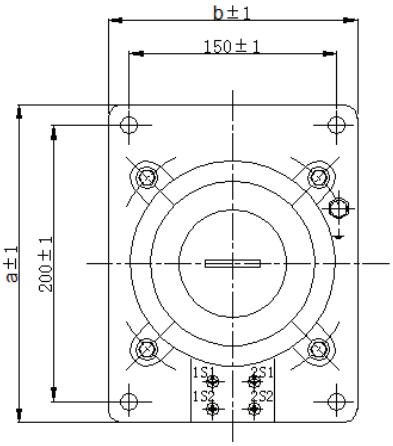

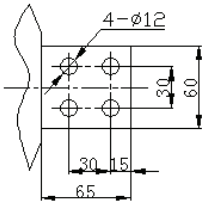

800/5 A

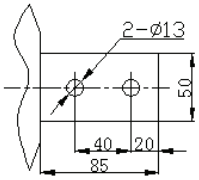

500-600/5 A

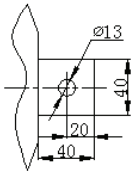

400/5 A

800	240	190	430
600 500	230	180	470
400			380
额定一次电流（A）	a（mm）	b（mm）	L（mm）

净重（Weight）：8-14kg

LAJ2-10Q 电流互感器

型号 Type	额定一次电流 Rated primary current (A)	准确级组合 Accuracy classes combination	额定输出 Rated output (VA)	额定短时热电流 Rated short-time thermal current (kA/1s)	额定动稳定电流 Rated dynamic current (kA)
LAJ2-10Q	20～200	0.2/10P15 0.5/10P15	10/20 20/20	120In	300In
	300			30	75
	400			30	75
	500			32	80
	600～800			40	100

外形尺寸图
Overall dimensions

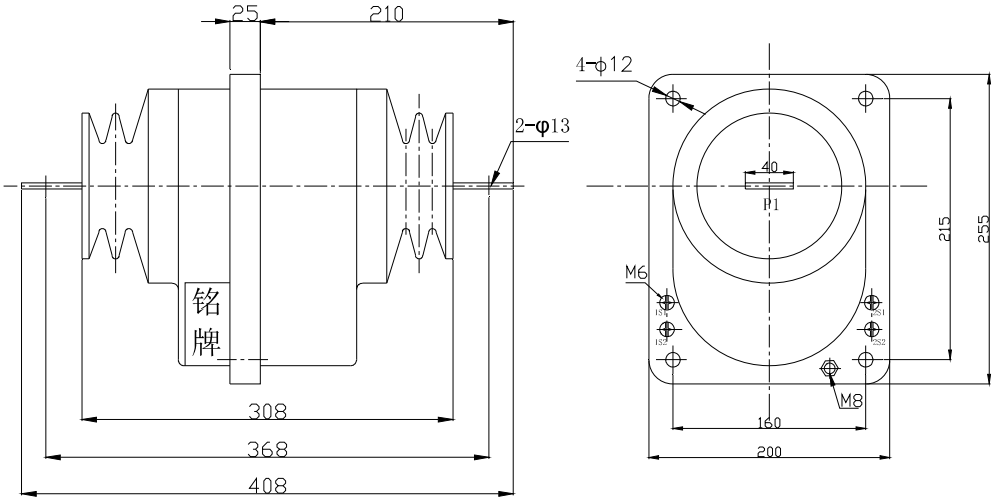

20-300A

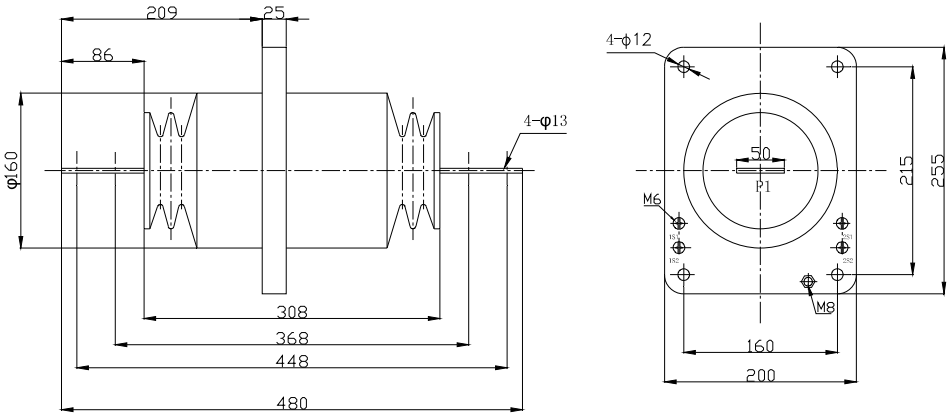

400-800A　　净重（Weight）：17.5-21kg

LDZB9-10 电流互感器

额定一次电流 Rated primary current (A)	额定短时热电流 Ith(kA/1s)	额定动稳定电流 Idyn(kA peak)	准确级组合 Accuracy classes	额定输出 Rated secondary output(VA)			
				0.2S, 0.5S	0.2	0.5	5P
300-600	63	160	0.2/0.5 0.5/5P10 0.5/5P20	15	15	30	15
750-1250	80	200	0.2/0.5/5P10 0.5/5P20/5P20	15	30	30	20
1500-3000	100	250	0.2/0.5/5P10 0.5/5P20/5P20	30	30	30	30

外形尺寸图
Overall dimensions

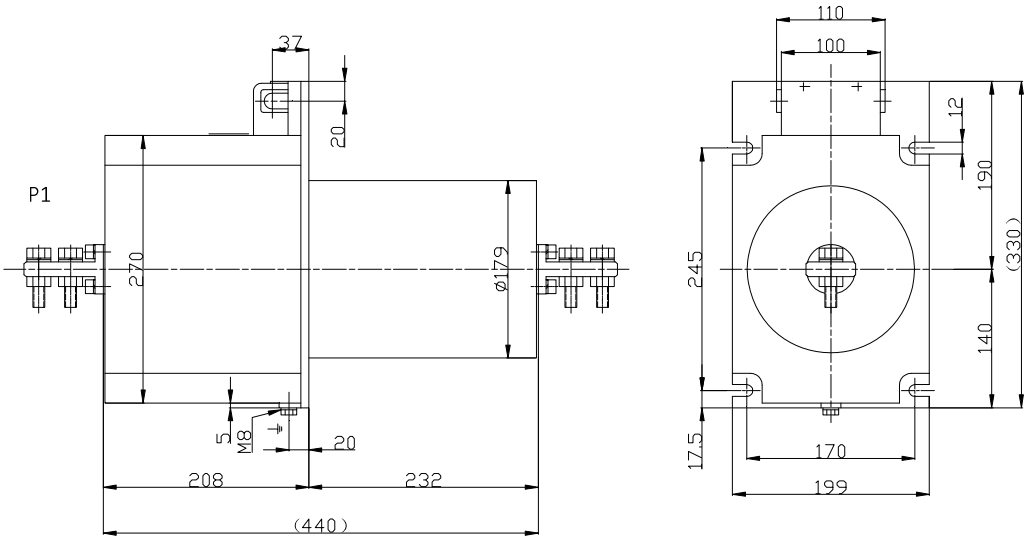

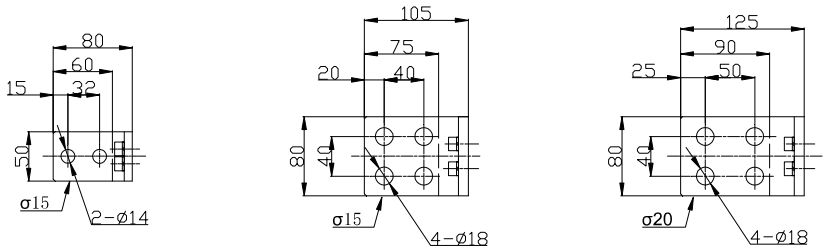

I1n≤1250A
螺栓 M12×50

I1n≤2000A
螺栓 M16×55

I1n≤3000A
螺栓 M16×65

净重（Weight）：17.5-21kg

LFS-10 电流互感器

额定一次电流 Rated primary current (A)	准确级组合 Accuracy classes combination	额定输出 Rated output (VA)	额定短时热电流 Rated short-time thermal current (kA/1s)	额定动稳定电流 Rated dynamic current (kA)
5～200	0.2/0.2, 0.2/0.5	10/15	80I1n	200I1n
	0.5/10P10	10/10		
	0.2/10P10	10/10		
300	0.2/0.2, 0.2/0.5	10/15	21	52.5
	0.5/10P10	15/10		
	0.2/10P10	15/10		
400～500	0.2/0.2, 0.2/0.5	10/15	32	80
	0.5/10P10	15/10		
	0.2/10P10	15/10		
600	0.2/0.2, 0.2/0.5	10/15	45	112.5
	0.5/10P10	15/10		
	0.2/10P10	15/10		

外形尺寸图
Overall dimensions

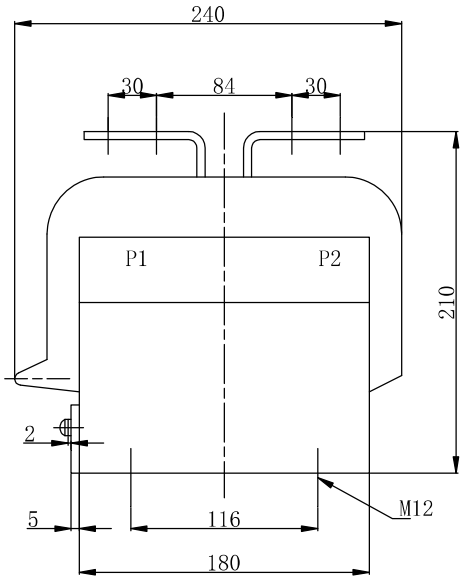

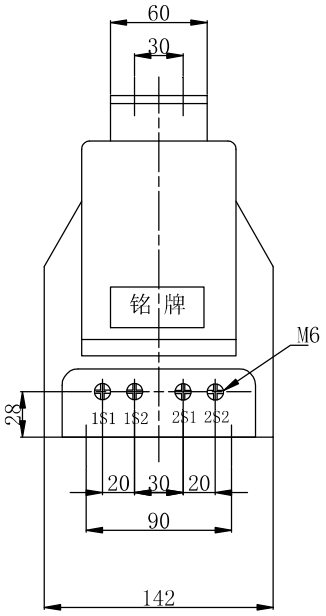

净重(Weight)：11-14kg

LFSQ-10Q, LFSQ1-10Q 电流互感器

型号 Type	额定一次电流 Rated primary current (A)	准确级组合 Accuracy classes combination	额定输出 Rated output (VA)	额定短时热电流 Rated short-time thermal current (kA/1s)	额定动稳定电流 Rated dynamic current (kA)
LFSQ-10Q LFSQ1-10Q	10, 20, 30, 40, 50, 75, 100, 150, 200, 300	0.2/0.2	10/10	150I1n	375I1n
		0.2/0.5	10/15		
		0.2/10P10	10/15		
		0.5/10P10	10/15		
		0.2/10P15	10/15		
		0.5/10P15	15/15		
	400	0.2/0.2	15/15, 20/20	32	80
		0.2/0.5	15/15, 20/20		
		0.2/10P10	15/20, 20/20		
		0.5/10P10	15/20, 20/20		
		0.2/10P15	15/15, 10/25		
		0.5/10P15	15/15, 15/25		
	500, 600	0.2/0.2	20/20. 30/30	45	112.5
		0.2/0.5	20/20, 30/30		
		0.2/10P10	20/25, 25/20		
		0.5/10P10	20/25, 25/20		
		0.2/10P15	20/20, 25/15		
		0.5/10P15	20/20, 25/15		
	800	0.2/0.2	25/25, 30/30	50	125
		0.2/0.5	25/25, 30/30		
		0.2/10P10	25/30, 30/25		
		0.5/10P10	25/30, 25/25		
		0.2/10P15	20/30, 25/25		
		0.5/10P15	20/30, 25/25		
	1000, 1200, 1500	0.2/0.2	30/30, 40/40	63	157.5
		0.2/0.5	30/30, 40/40		
		0.2/10P10	30/30, 30/25		
		0.5/10P10	30/30, 30/25		
		0.2/10P15	20/40, 30/30		
		0.5/10P15	30/40, 40/30		

外形尺寸图

Overall dimensions

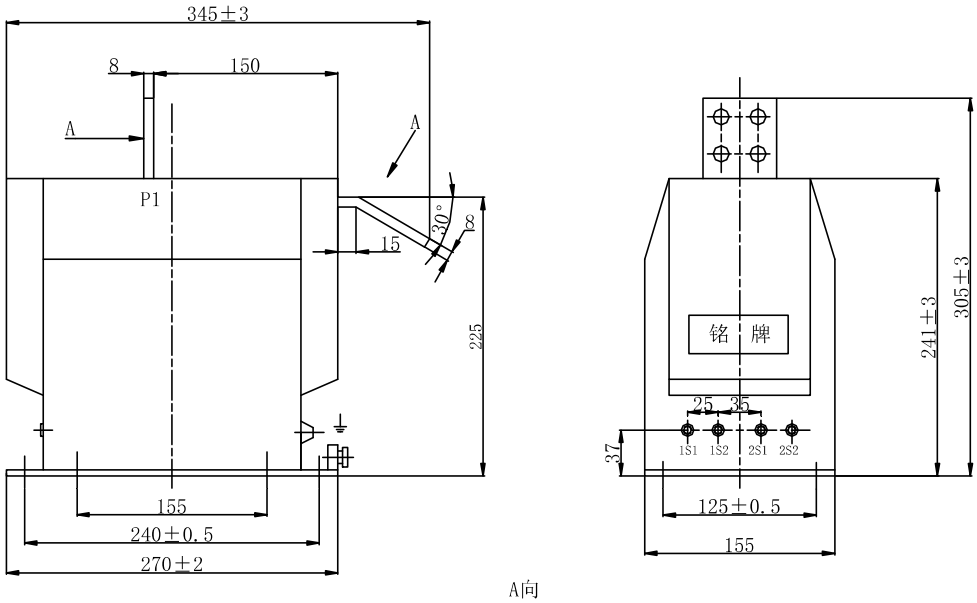

A向

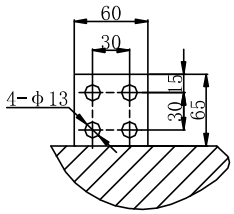

净重(Weight)：20kg

LFSQ-10Q

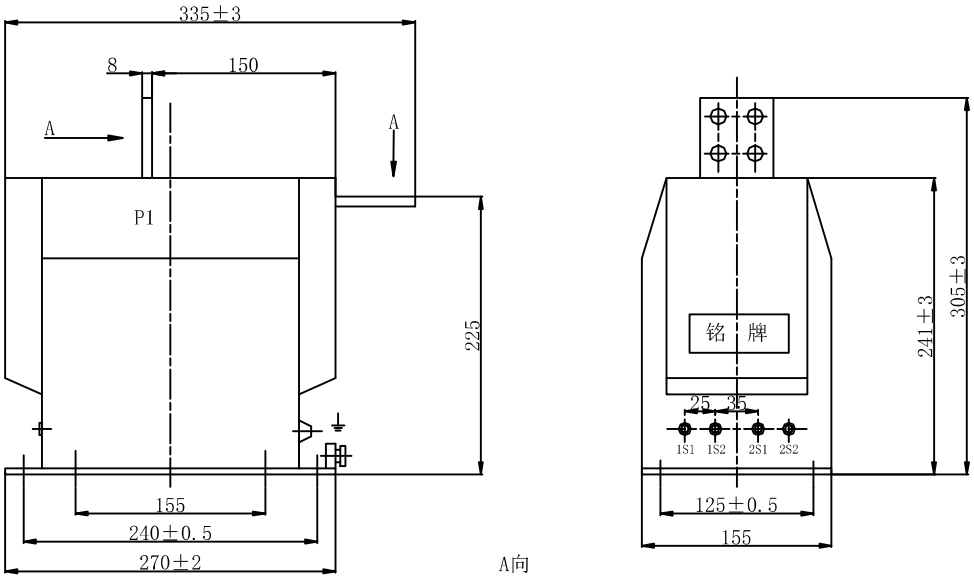

A向

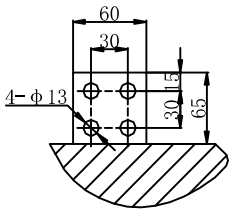

净重(Weight)20kg

LFSQ1-10Q

LFZB8-10 电流互感器

型号 Type	额定一次电流 Rated primary current (A)	准确级组合 Accuracy classes combination	额定输出 Rated output (VA)	额定短时热电流 Rated short-time thermal current (kA/1s)	额定动稳定电流 Rated dynamic current (kA)
LFZB8-10	15	10P15/10P15	15/15	2	5
		0.2/0.5/10P10	15/20/15		
		0.2/0.5/10P15	10/20/15		
		0.2/10P10/10P15	15/15/15		
		0.5/10P15/10P15	20/15/15		
		10P10/10P10/10P10	15/15/15		
	20	10P15/10P15	15/15	3	7.5
		0.2/0.5/10P10	15/20/15		
		0.2/0.5/10P15	15/20/15		
		0.2/10P10/10P15	15/15/15		
		0.5/10P15/10P15	20/15/15		
		10P10/10P10/10P10	15/15/15		
	30、40	10P15/10P15	15/15	5	12.5
		0.2/0.5/10P10	15/20/15		
		0.2/0.5/10P15	15/20/15		
		0.2/10P10/10P15	15/15/15		
		0.5/10P15/10P15	20/15/15		
		10P10/10P10/10P10	15/15/15		
	50、60	10P15/10P15	15/15	10	25
		0.2/0.5/10P10	15/20/15		
		0.2/0.5/10P15	15/20/15		
		0.2/10P10/10P15	15/15/15		
		0.5/10P15/10P15	20/15/15		
		10P10/10P10/10P10	15/15/15		

型号 Type	额定一次电流 Rated primary current (A)	准确级组合 Accuracy classes combination	额定输出 Rated output (VA)	额定短时热电流 Rated short-time thermal current (kA/1s)	额定动稳定电流 Rated dynamic current (kA)
LFZB8-10	75	10P15/10P15	15/15	16	40
		0.2/0.5/10P10	15/20/15		
		0.2/0.5/10P15	15/20/15		
		0.2/10P10/10P15	15/15/15		
		0.5/10P15/10P15	20/15/15		
		10P10/10P10/10P10	15/15/15		
	100	10P15/10P15	15/15	20	50
		0.2/0.5/10P10	15/20/15		
		0.2/0.5/10P15	15/20/15		
		0.2/10P10/10P15	15/15/15		
		0.5/10P15/10P15	20/15/15		
		10P10/10P10/10P10	15/15/15		
	150, 200	10P15/10P15	15/15	31.5	78.75
		0.2/0.5/10P10	15/20/15		
		0.2/0.5/10P15	15/20/15		
		0.2/10P10/10P15	15/15/15		
		0.5/10P15/10P15	20/15/15		
		10P10/10P10/10P10	15/15/15		
	300、400	10P15/10P15	15/15	40	100
		0.2/0.5/10P10	15/20/15		
		0.2/0.5/10P15	15/20/15		
		0.2/10P10/10P15	15/15/15		
		0.5/10P15/10P15	20/15/15		
		10P10/10P10/10P10	15/15/15		
	500、600	10P15/10P15	15/15	63	157.5
		0.2/0.5/10P10	15/20/15		
		0.2/0.5/10P15	15/20/15		

型号 Type	额定一次电流 Rated primary current (A)	准确级组合 Accuracy classes combination	额定输出 Rated output (VA)	额定短时热电流 Rated short-time thermal current (kA/1s)	额定动稳定电流 Rated dynamic current (kA)
LFZB8-10	500、600	0.2/10P10/10P15	15/15/15	63	157.5
		0.5/10P15/10P15	20/15/15		
		10P10/10P10/10P10	15/15/15		
	800	10P15/10P15	15/15	80	200
		0.2/0.5/10P10	15/20/15		
		0.2/0.5/10P15	15/20/15		
		0.2/10P10/10P15	15/15/15		
		0.5/10P15/10P15	20/15/15		
		10P10/10P10/10P10	15/15/15		

外形尺寸图

Overall dimensions

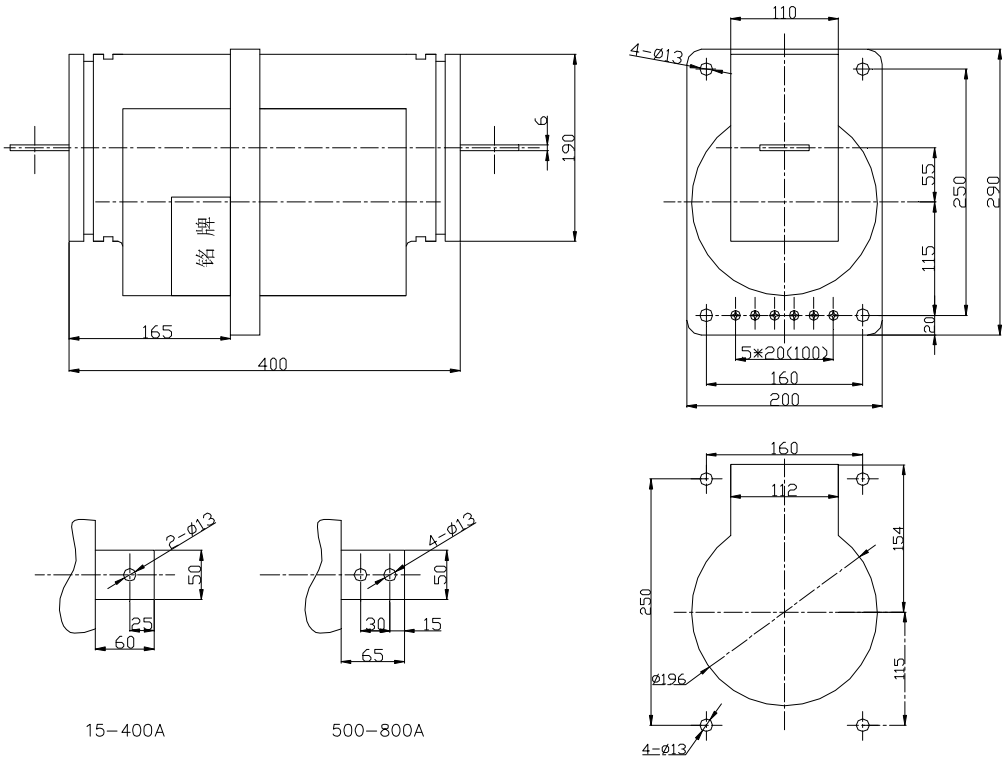

15-400A　　500-800A

净重(Weight)：30kg　　开孔尺寸图

LFZJ9-10, LFZJ9-10L 电流互感器

型号 Type	额定一次电流 Rated primary current (A)	准确级组合 Accuracy classes combination	额定输出 Rated output (VA)	额定短时热电流 Rated short-time thermal current (kA/1s)	额定动稳定电流 Rated dynamic current (kA)
LFZJ9-10 LFZJ9-10L	10	0.2S	25	1	2.5
		0.2	25	1	2.5
		0.5S	25	1	2.5
		0.5	25	1	2.5
		0.2/10P10	10/15	1	2.5
		0.5/10P10	10/15	1	2.5
	15	0.2S	25	1.5	3.75
		0.2	25	1.5	3.75
		0.5S	25	1.5	3.75
		0.5	25	1.5	3.75
		0.2/10P10	10/15	1.5	3.75
		0.5/10P10	10/15	1.5	3.75
	20	0.2S	25	2	5
		0.2	25	2	5
		0.5S	25	2	5
		0.5	25	2	5
		0.2/10P10	10/15	2	5
		0.5/10P10	10/15	2	5
	25	0.2S	25	2.5	6.25
		0.2	25	2.5	6.25
		0.5S	25	2.5	6.25
		0.5	25	2.5	6.25
		0.2/10P10	10/15	2.5	6.25
		0.5/10P10	10/15	2.5	6.25
	30	0.2S	25	3	7.5
		0.2	25	3	7.5
		0.5S	25	3	7.5
		0.5	25	3	7.5
		0.2/10P10	10/15	3	7.5
		0.5/10P10	10/15	3	7.5
	40	0.2S	25	4	10
		0.2	25	4	10
		0.5S	25	4	10
		0.5	25	4	10
		0.2/10P10	10/15	4	10
		0.5/10P10	10/15	4	10
	50	0.2S	25	7.5	18.75
		0.2	25	7.5	18.75
		0.5S	25	7.5	18.75
		0.5	25	7.5	18.75
		0.2/10P10	10/15	7.5	18.75
		0.5/10P10	10/15	7.5	18.75
	75	0.2S	25	10	25
		0.2	25	10	25
		0.5S	25	10	25
		0.5	25	10	25
		0.2/10P10	10/15	10	25
		0.5/10P10	10/15	10	25
	100	0.2S	25	15	37.5
		0.2	25	15	37.5
		0.5S	25	15	37.5
		0.5	25	15	37.5

型号 Type	额定一次电流 Rated primary current (A)	准确级组合 Accuracy classes combination	额定输出 Rated output (VA)	额定短时热电流 Rated short-time thermal current (kA/1s)	额定动稳定电流 Rated dynamic current (kA)
LFZJ9-10 LFZJ9-10L	100	0.2/10P10	10/15	15	37.5
		0.5/10P10	10/15	15	37.5
	150	0.2S	25	22.5	56.25
		0.2	25	22.5	56.25
		0.5S	25	22.5	56.25
		0.5	25	22.5	56.25
		0.2/10P10	10/15	22.5	56.25
		0.5/10P10	10/15	22.5	56.25
	200	0.2S	25	31.5	78.75
		0.2	25	31.5	78.75
		0.5S	25	31.5	78.75
		0.5	25	31.5	78.75
		0.2/10P10	10/15	31.5	78.75
		0.5/10P10	10/15	31.5	78.75
	250	0.2S	25	31.5	78.75
		0.2	25	31.5	78.75
		0.5S	25	31.5	78.75
		0.5	25	31.5	78.75
		0.2/10P10	10/15	31.5	78.75
		0.5/10P10	10/15	31.5	78.75
	300	0.2S	25	45	112.5
		0.2	25	45	112.5
		0.5S	25	45	112.5
		0.5	25	45	112.5
		0.2/10P10	10/15	45	112.5
		0.5/10P10	10/15	45	112.5
	400	0.2S	25	63	157.5
		0.2	25	63	157.5
		0.5S	25	63	157.5
		0.5	25	63	157.5
		0.2/10P10	10/15	63	157.5
		0.5/10P10	10/15	63	157.5
	500, 600	0.2S	25	63	157.5
		0.2	25	63	157.5
		0.5S	25	63	157.5
		0.5	25	63	157.5
		0.2/10P10	10/15	63	157.5
		0.5/10P10	10/15	63	157.5

外形尺寸图
Overall dimensions

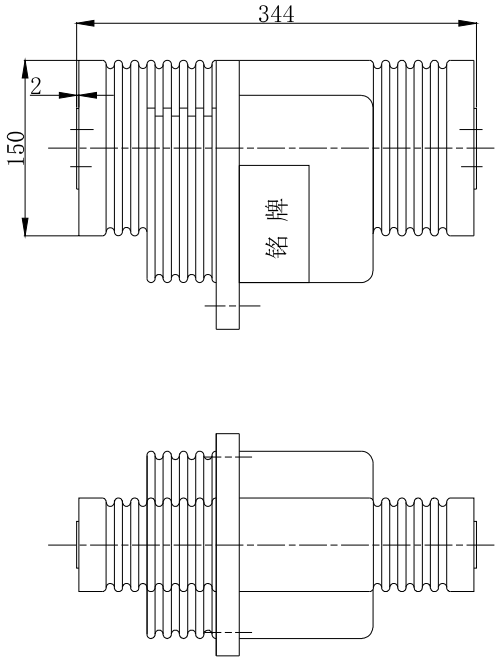

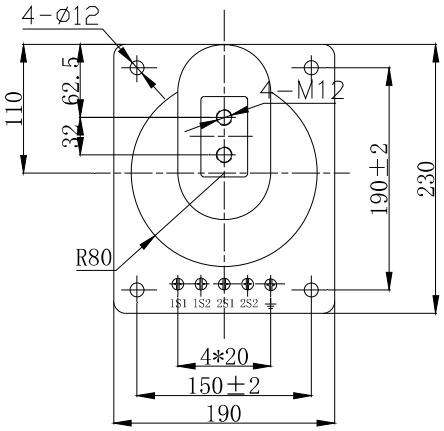

LFZJ9-10
净重(Weight)：14-17kg

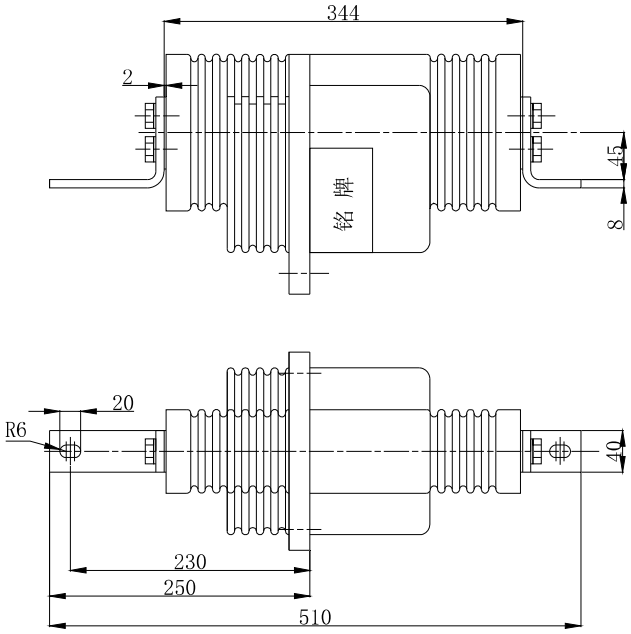

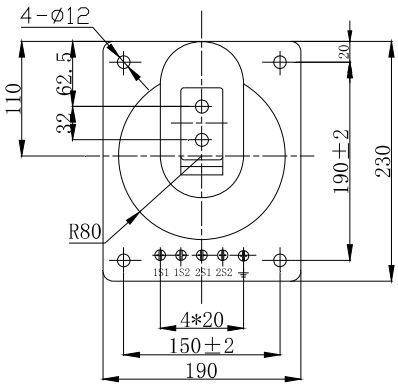

LFZJ9-10L
净重(Weight)：17-21kg

LMZB1-10 电流互感器

额定一次电流 Rated primary current (A)	额定短时热电流 Rated short-time thermal current (kA/1s)	额定动稳定电流 Rated dynamic current (kA)	准确级组合 Accuracy classes combination	额定输出 Rated output (VA)		
				0.2	0.5	5P
2500-5000	100	250	0.2S/5P10/5P20 0.2/5P10/5P20 0.5/5P10/5P20 0.2/0.5/5P10/5P20 0.2/0.5/5P10/5P20	30	30	30

外形尺寸图 Overall dimensions

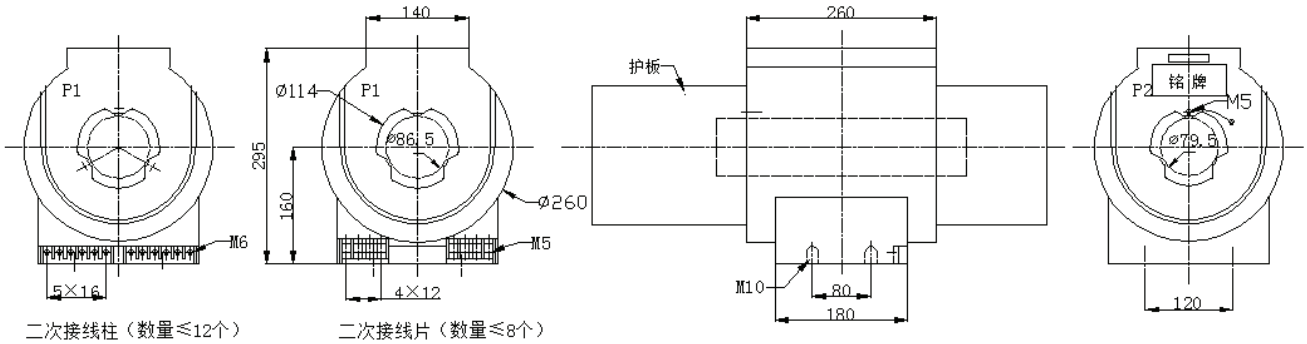

注：
产品本身无护板，左、右两侧可装配150mm短板或210mm长板。客户可根据需求提出要求。
产品本身无铜棒，客户可根据需求提出要求。

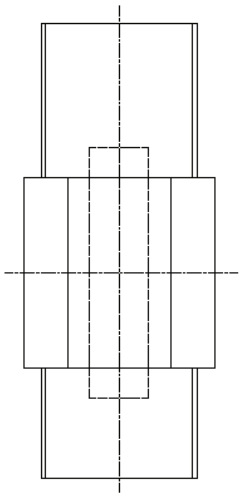

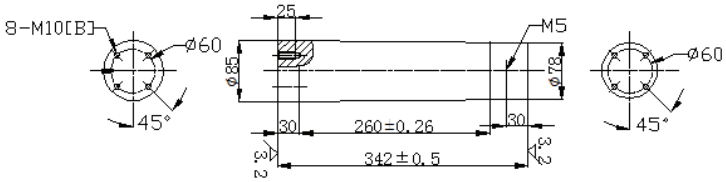

净重（Weight）：60kg

LMZB1-15 电流互感器

额定一次电流 Rated primary current (A)	准确级组合 Accuracy classes combination	额定输出 Rated output (VA)
1000-3000	0.2/0.5/5P15/5P15	30/30/40/40
	0.2/0.5/10P15/10P15	30/30/40/40
	0.2S/0.5/5P20/5P20	30/30/30/30
	0.2/0.5S/10P20/10P20	30/30/30/30
4000-5000	0.2/0.5/5P15/5P15	30/30/30/30
	0.2/0.5/10P15/10P15	30/30/30/30
	0.2S/0.5/5P20/5P20	30/30/20/20
	0.2/0.5S/10P20/10P20	30/30/20/20

外形尺寸图 Overall dimensions

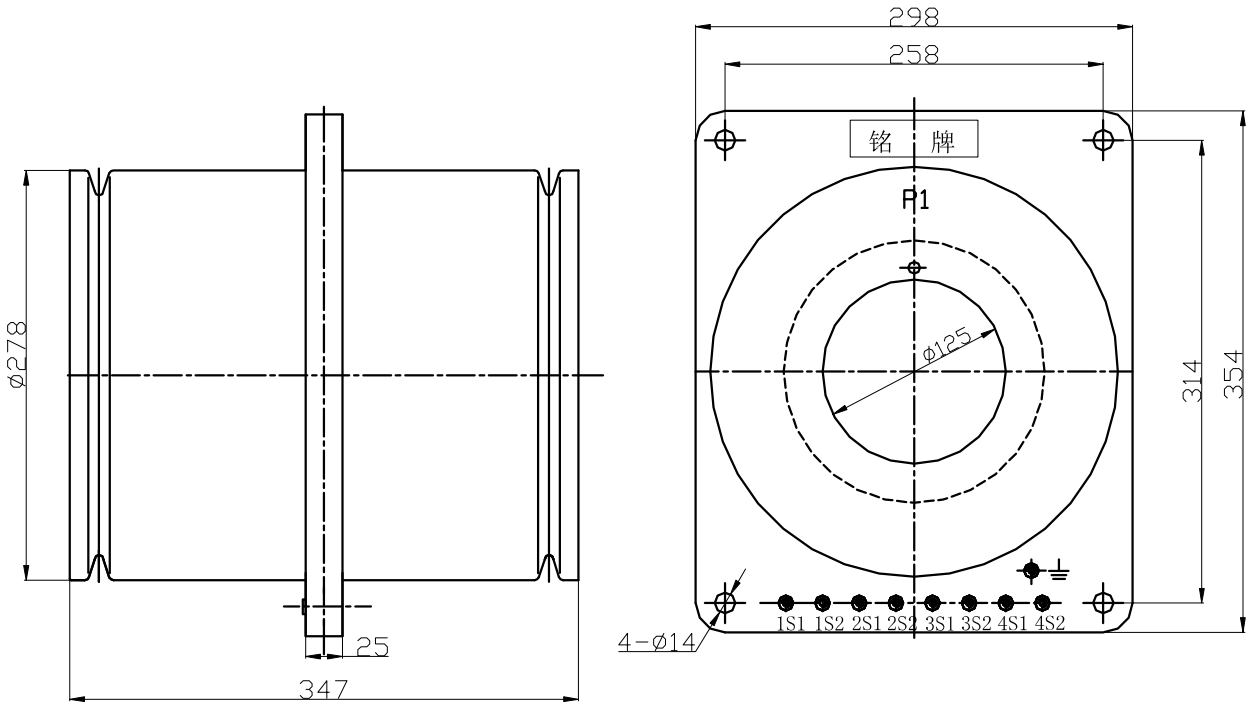

净重（Weight）：42kg

LMZB2-10 电流互感器

额定一次电流 Rated primary current (A)	准确级组合 Accuracy classes combination	额定输出 Rated output (VA)
1000	0.2/10P10/10P10	20/30/30
	0.2/10P10/10P20	20/30/20
	0.5/10P20/10P20	20/20/20
	0.2/0.5/10P10/10P10	15/20/30/30
	0.2/0.5/10P20/10P20	15/20/15/15
2000	0.2/10P10/10P10	30/40/40
	0.2/10P10/10P20	20/30/25
	0.5/10P20/10P20	20/25/25
	0.2/0.5/10P10/10P10	20/20/40/40
	0.2/0.5/10P20/10P20	20/20/20/20
3000	0.2/10P10/10P10	30/40/40
	0.2/10P10/10P20	20/30/25
	0.5/10P20/10P20	20/25/25
	0.2/0.5/10P10/10P10	20/20/40/40
	0.2/0.5/10P20/10P20	20/20/20/20
4000	0.2/10P10/10P10	30/40/40
	0.2/10P10/10P20	20/30/25
	0.5/10P20/10P20	20/25/25
	0.2/0.5/10P10/10P10	20/20/40/40
	0.2/0.5/10P20/10P20	20/20/25/25
5000 （二次电流为 5A）	0.2/10P10/10P10	30/40/40
	0.2/10P10/10P20	20/30/25
	0.5/10P20/10P20	20/25/25
	0.2/0.5/10P10/10P10	20/20/30/30
	0.2/0.5/10P20/10P20	15/15/20/20

外形尺寸图 Overall dimensions

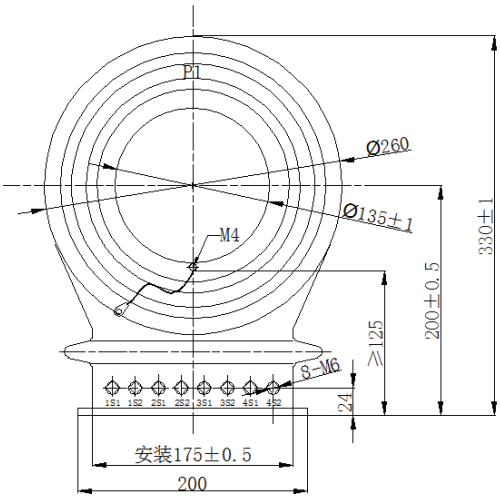

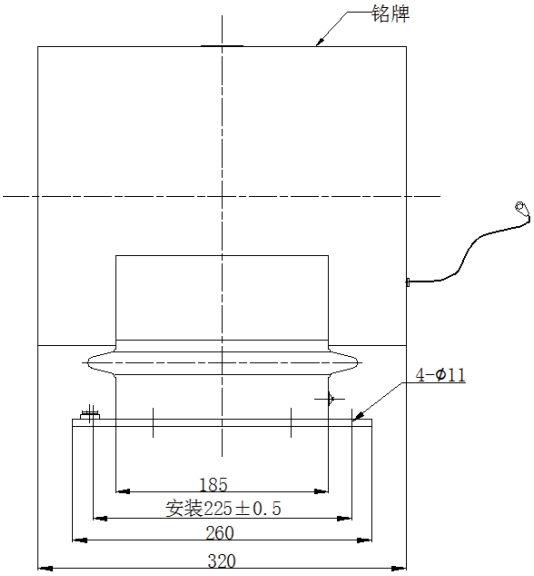

净重（Weight）：65kg

LMZB3-10G 电流互感器

型号 Type	额定一次电流 Rated primary current (A)	额定二次电流 Rated secondary current (A)	准确级组合 Accuracy classes combination	额定输出 Rated output (VA)
LMZB3-10G	1000-4000	5 或 1	0.2/0.5/5P15/5P15 0.2/0.5/10P15/10P15 0.2S/0.5/5P20/5P20 0.2/0.5S/10P20/10P20	30/30/30/30
				30/30/30/30
				30/30/20/20
				30/30/20/20
	5000	5	0.2/0.5/5P15/5P15 0.2/0.5/10P15/10P15 0.2S/0.5/5P20/5P20 0.2/0.5S/10P20/10P20	30/30/30/30
				30/30/30/30
				30/30/20/20
				30/30/20/20

外形尺寸图

Overall dimensions

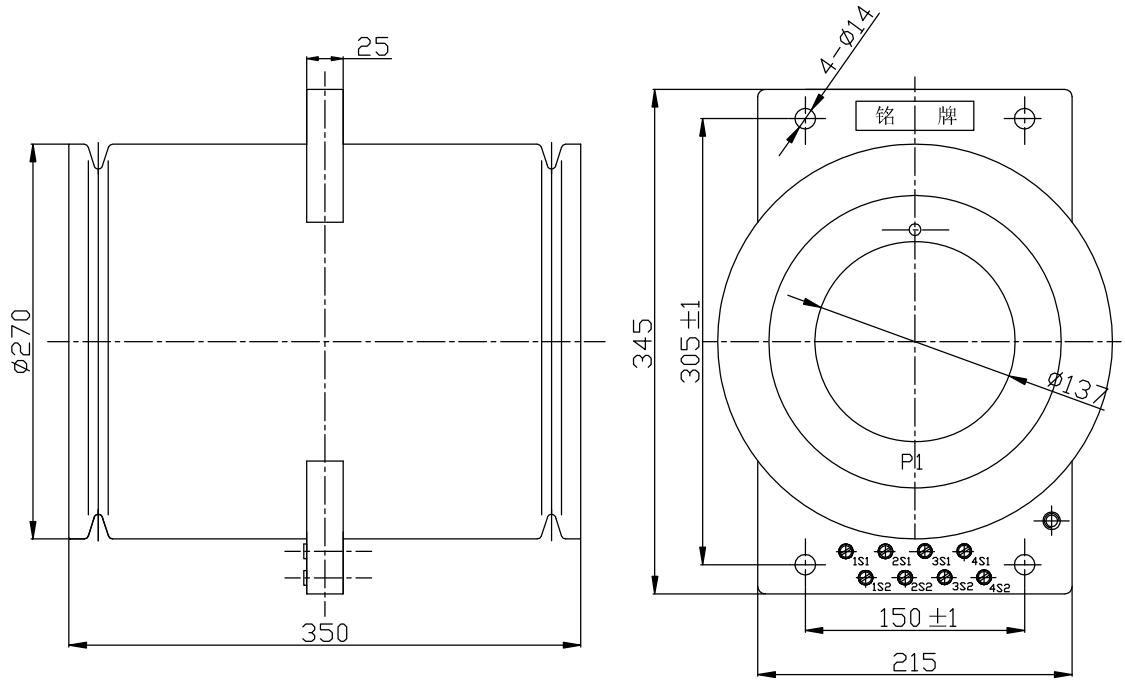

净重(Weight)：37kg

LMZB3-10Q 电流互感器

型号 Type	额定一次电流 Rated primary current (A)	准确级组合 Accuracy classes combination	额定输出 Rated output (VA)
LMZB3-10Q	1000-1200	0.2/0.2/10P15 0.2/0.5/10P15 0.2/0.2/10P20 0.2/0.5/10P20 0.2/10P10/10P20 0.5/10P10/10P20	15/15/20
			15/15/20
			15/15/20
			15/15/20
			15/15/15
			15/15/15
	1500		15/15/20，20/20/15
			15/15/20，20/20/15
			15/15/20，20/20/15
			15/15/20，20/20/15
			15/15/15，20/15/15
			15/15/15，25/20/15
	2000-5000		20/20/25，15/15/30
			20/20/25，15/15/30
			20/20/25，20/20/20
			20/20/25，30/30/20
			15/20/25，20/20/20
			15/20/25，20/20/20

外形尺寸图

Overall dimensions

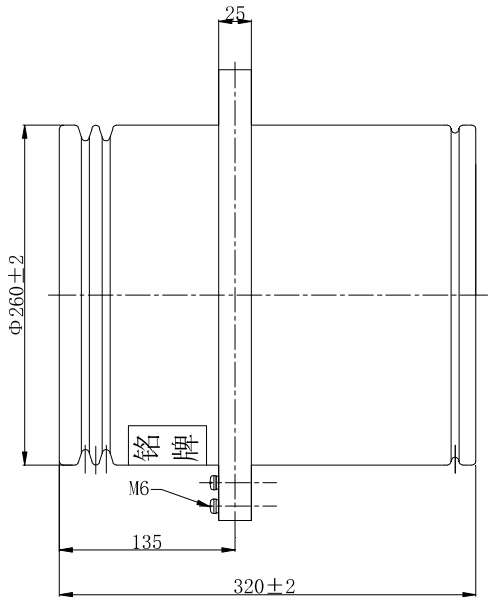

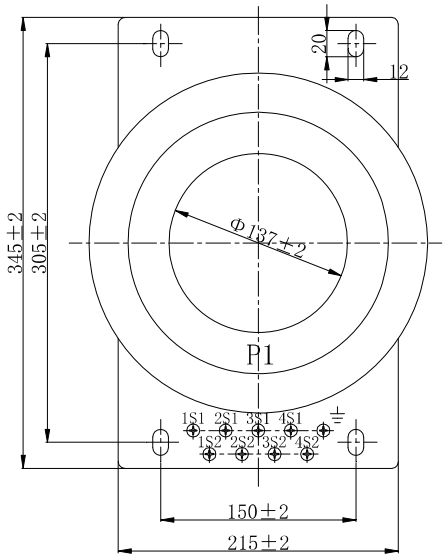

净重(Weight)：20-25kg

LMZB3-10QG 电流互感器

型号 Type	额定一次电流 Rated primary current (A)	额定二次电流 Rated secondary current (A)	准确级组合 Accuracy classes combination	额定输出 Rated output (VA)
LMZB3-10QG	600-5000	5 或 1	5.0/5.0	150/150

技术说明：

1. 此电流互感器作为功率电源使用，容量能满足 150VA；
2. 一次绕组通过一次电流，二次绕组 1（1S1-1S2）感应出 5A 电流，二次绕组 2 需开路，1S2、2S2 接地；
3. 一次绕组通过一次电流，二次绕组 2（2S1-2S2）感应出 5A 电流，二次绕组 1 需开路，1S2、2S2 接地；
4. 1S1-1S2 输入 3A 电流时，1S2 不能接地，一次绕组不能输入电流，2S1-2S2 能感应出电流。此时，1S1 与 2S1 同极性，2S2 需接地。

外形尺寸图

Overall dimensions

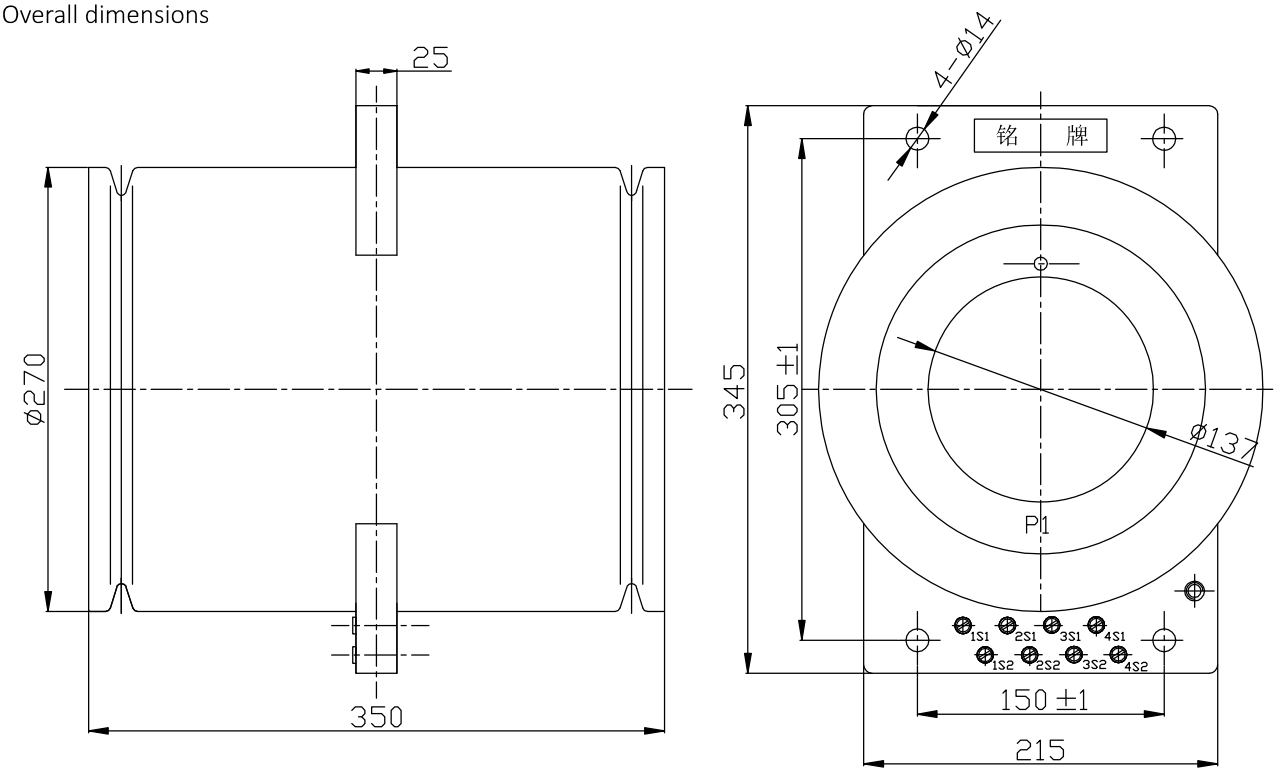

净重（Weight）：20-25kg

LMZBJ4-10 电流互感器

型号 Type	额定一次电流 Rated primary current (A)	额定二次电流 Rated secondary current (A)	准确级组合 Accuracy classes combination	额定输出 Rated output (VA)
LMZBJ4-10	1000-4000	5 或 1	0.2S/0.5/5P20 0.2S/0.5/10P20 0.2S/0.5/5P30 0.2S/0.5/10P30	30/30/30/30
				30/30/30/30
				30/30/20/20
				30/30/20/20
	5000	5 或 1	0.2S/0.5/5P20 0.2S/0.5/10P20 0.2S/0.5/5P30 0.2S/0.5/10P30	30/30/30/30
				30/30/30/30
				30/30/20/20
				30/30/20/20

外形尺寸图

Overall dimensions

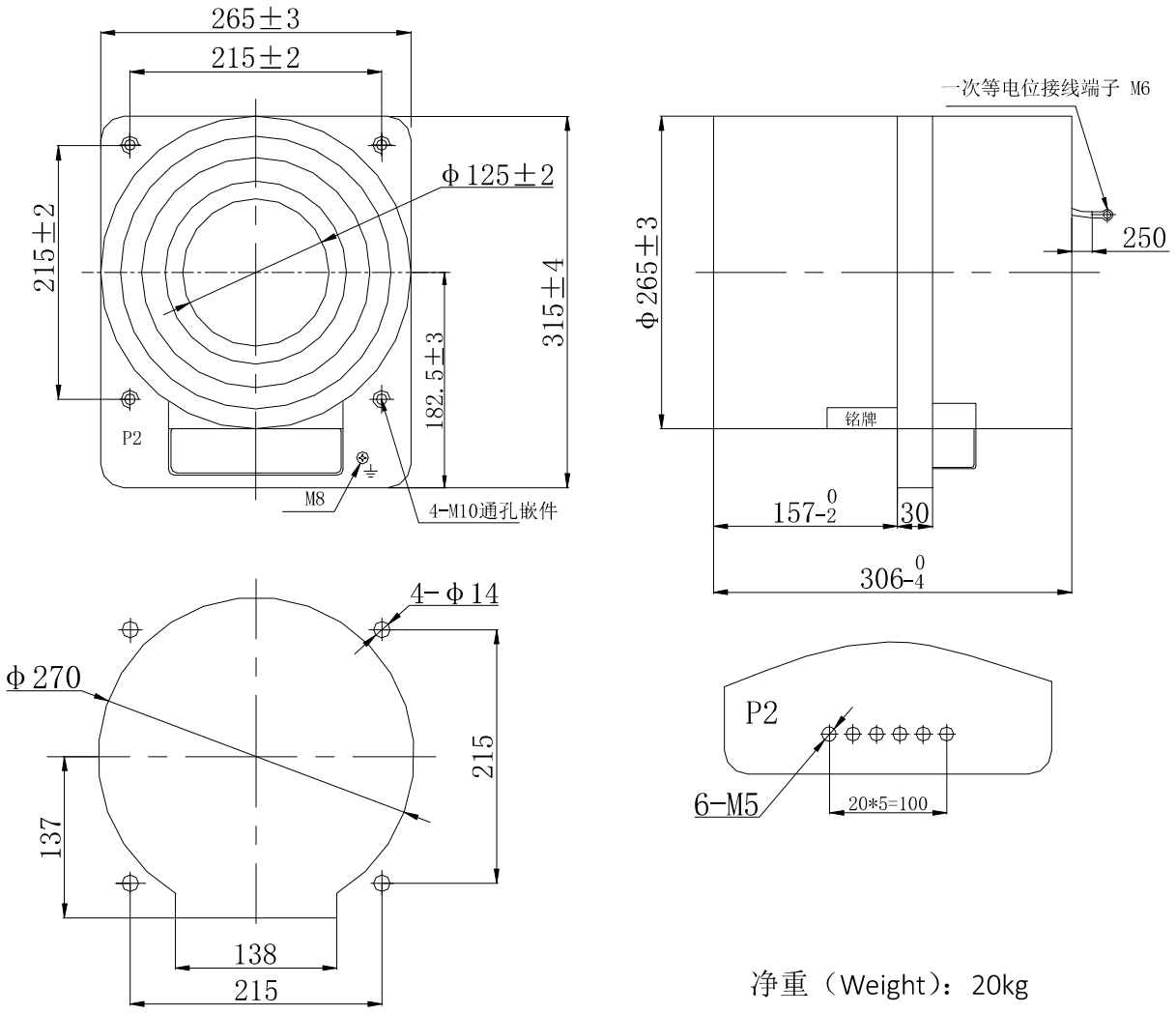

开孔尺寸图

净重（Weight）：20kg

LMZBJ5-10 电流互感器

型号 Type	额定一次电流 Rated primary current (A)	额定二次电流 Rated secondary current (A)	准确级组合 Accuracy classes combination	额定输出 Rated output (VA)
LMZBJ5-10	1000-4000	5 或 1	0.2S/0.5/5P10/5P15	30/30/30/30
			0.2S/0.5/10P10/10P15	30/30/30/30
			0.2S/0.5/5P15/5P20	30/30/20/20
			0.2/0.5S/10P15/10P20	30/30/20/20
	5000	5 或 1	0.2S/0.5/5P10/5P15	30/30/30/30
			0.2S/0.5/10P10/10P15	30/30/30/30
			0.2S/0.5/5P15/5P15	30/30/20/20
			0.2/0.5S/10P15/10P15	30/30/20/20

外形尺寸图

Overall dimensions

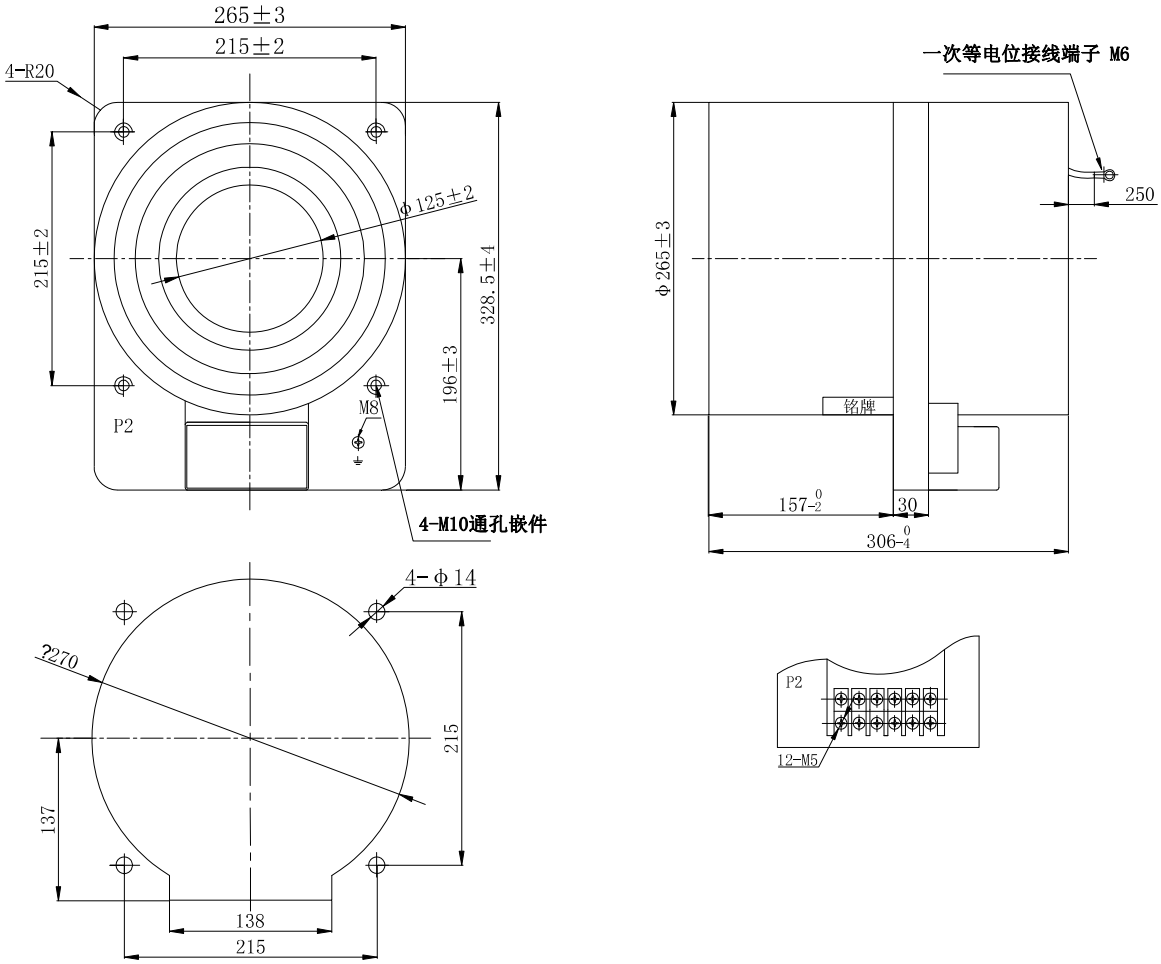

开孔尺寸图

净重（Weight）：27kg

LMZBJ6-10 电流互感器

型号 Type	额定一次电流 Rated primary current (A)	额定二次电流 Rated secondary current (A)	准确级组合 Accuracy classes combination	额定输出 Rated output (VA)
LMZBJ6-10	1000-4000	5 或 1	0.2S/0.5/5P15/5P15	30/30/30/30
			0.2S/0.5/10P15/10P15	30/30/30/30
			0.2S/0.5/5P20/5P20	30/30/20/20
			0.2/0.5S/10P20/10P20	30/30/20/20
	5000	5 或 1	0.2/0.5/5P15/5P15	30/30/30/30
			0.2/0.5/10P15/10P15	30/30/30/30
			0.2S/0.5/5P20/5P20	30/30/20/20
			0.2/0.5S/10P20/10P20	30/30/20/20

外形尺寸图

Overall dimensions

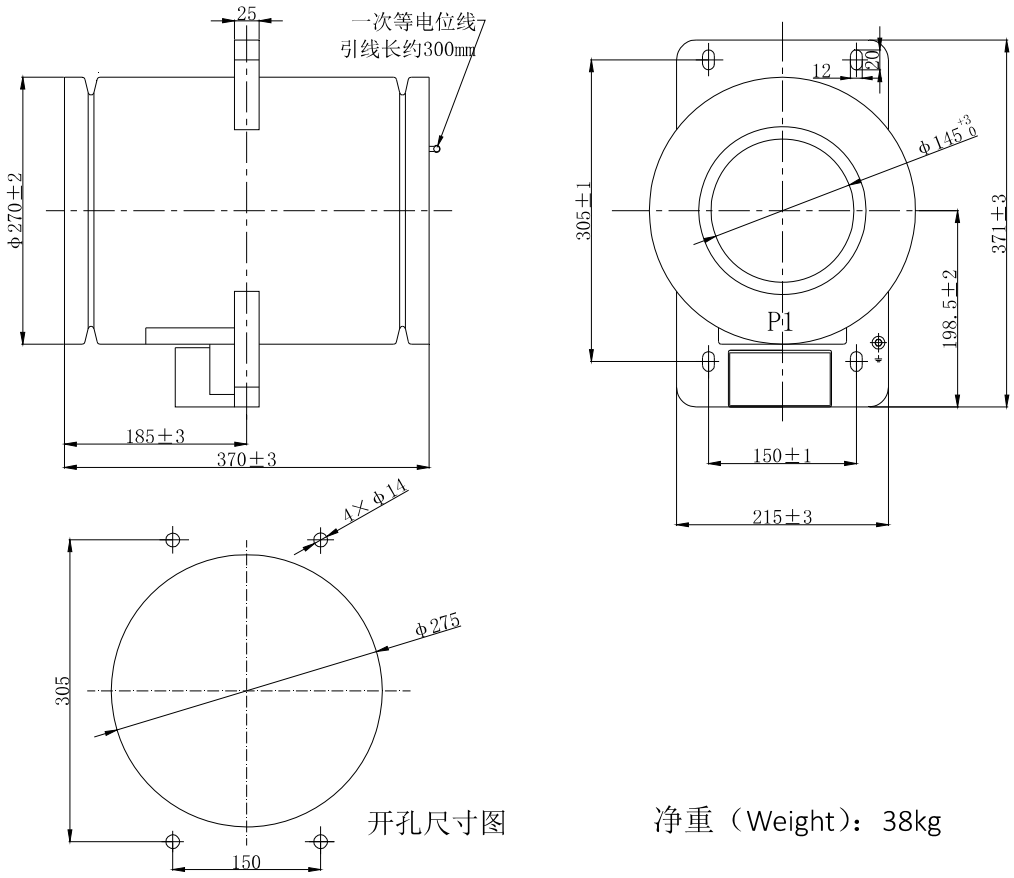

开孔尺寸图

净重（Weight）：38kg

LMZBJ-10Q/4 电流互感器

型号 Type	额定一次电流 Rated primary current (A)	准确级组合 Accuracy classes combination	额定输出 Rated output (VA)
LMZBJ-10Q/4	4000	0.2(0.5)/10P10/10P15/10P20 0.2(0.5)/10P15/10P15/10P15 0.2(0.5)/10P15/10P15/10P20 0.2/0.5/10P15/10P15 0.2/0.5/10P15/10P20 0.2/0.5/10P20/10P20	20/20/20/20
			30/40/40/40
			30/40/40/30
			30/40/30/30
			40/30/30/30
			30/30/40/40
			30/30/40/30
			40/40/30/30
	5000	0.2(0.5)/10P10/10P15/10P20 0.2(0.5)/10P15/10P15/10P15 0.2(0.5)/10P15/10P15/10P20 0.2/0.5/10P15/10P15 0.2/0.5/10P15/10P20 0.2/0.5/10P20/10P20	20/20/20/20
			30/40/40/40
			30/40/40/30
			30/40/30/30
			40/30/30/30
			30/30/40/40
			30/30/40/30
			40/40/30/30
	6000	0.2(0.5)/10P10/10P15/10P20 0.2(0.5)/10P15/10P15/10P15 0.2(0.5)/10P15/10P15/10P20 0.2/0.5/10P15/10P15 0.2/0.5/10P15/10P20 0.2/0.5/10P20/10P20	20/20/20/20
			30/40/40/40
			30/40/40/30
			30/40/30/30
			40/30/30/30
			40/40/40/40
			40/40/40/30
			40/40/30/30

外形尺寸图
Overall dimensions

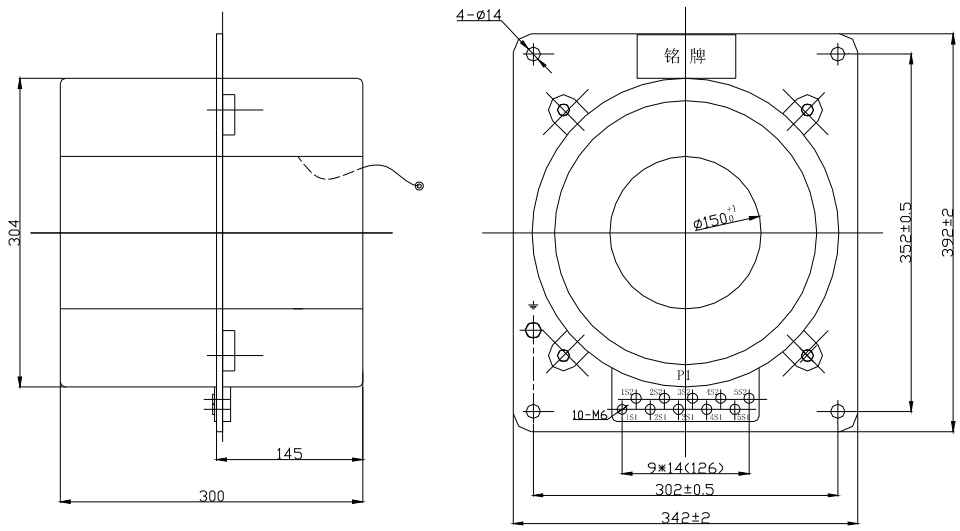

净重(Weight)：50kg

LMZBJ-10Q, LMZD2-10Q 电流互感器

型号 Type	额定一次电流 Rated primary current (A)	准确级组合 Accuracy classes combination	额定输出 Rated output (VA)
LMZBJ-10Q LMZD2-10Q	1000, 1200	0.2/0.5/10P10	15/15/25, 20/20/20
		0.2/0.5/10P15	15/15/20
		0.2/10P10/10P15	15/15/20
		0.5/10P10/10P15	15/15/20
		0.2/10P10/10P20	15/15/15
		0.5/10P10/10P20	15/15/15
	1500	0.2/0.5/10P10	15/15/25，20/20/20
		0.2/0.5/10P15	15/15/20
		0.2/10P10/10P15	15/15/20
		0.5/10P10/10P15	15/15/20
		0.2/10P10/10P20	15/15/15
		0.5/10P10/10P20	15/15/15
	2000, 3000	0.2/0.5/10P10	20/20/30，25/25/25
		0.2/0.5/10P15	20/20/25，25/25/25
		0.2/10P10/10P15	20/30/30，30/30/20
		0.5/10P10/10P15	20/30/30，30/30/20
		0.2/10P10/10P20	20/30/25，25/25/25
		0.5/10P10/10P20	20/30/25，25/25/25
	4000, 5000, 6000	0.2/0.5/10P15	20/20/30，25/25/25
		0.2/0.5/10P20	20/20/25，25/25/25
		0.2/10P10/10P20	20/30/25，30/30/20
		0.5/10P10/10P20	20/30/25，30/30/20
		0.2/10P15/10P20	20/30/25，25/25/25
		0.5/10P15/10P20	20/30/25，25/25/25

外形尺寸图

Overall dimensions

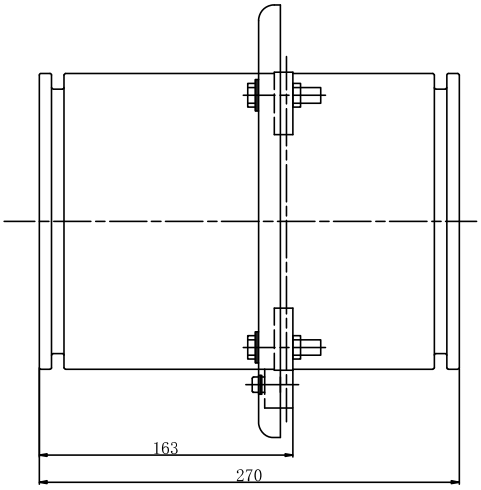

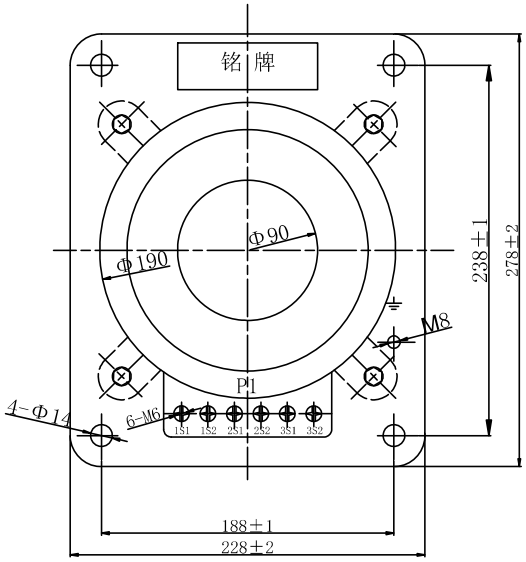

LMZBJ-10Q(1000A-1200A)

净重（Weight）：40-53kg

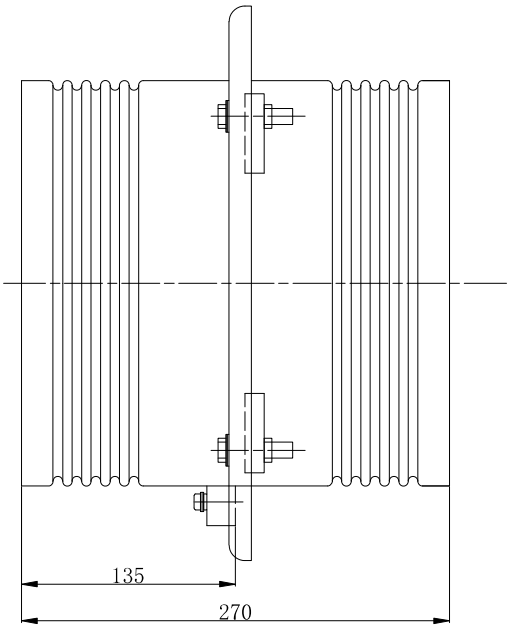

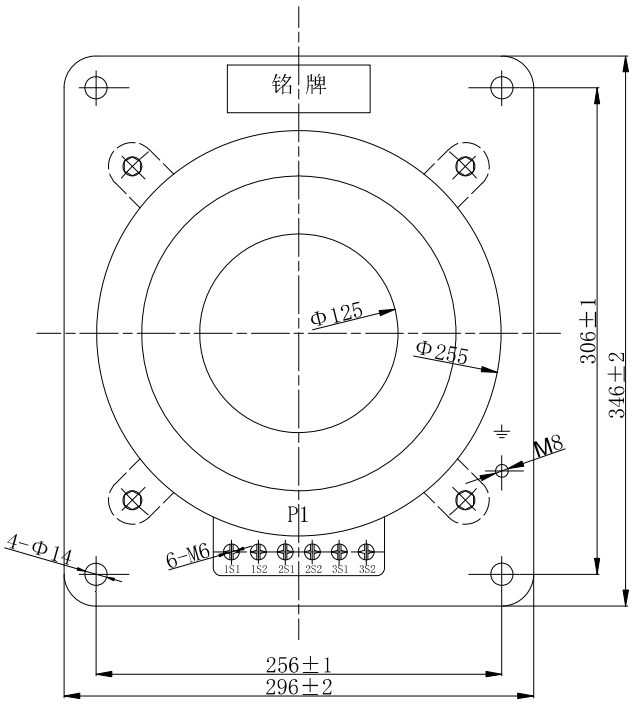

LMZBJ-10Q(1500A-3000A)

净重（Weight）：40-53kg

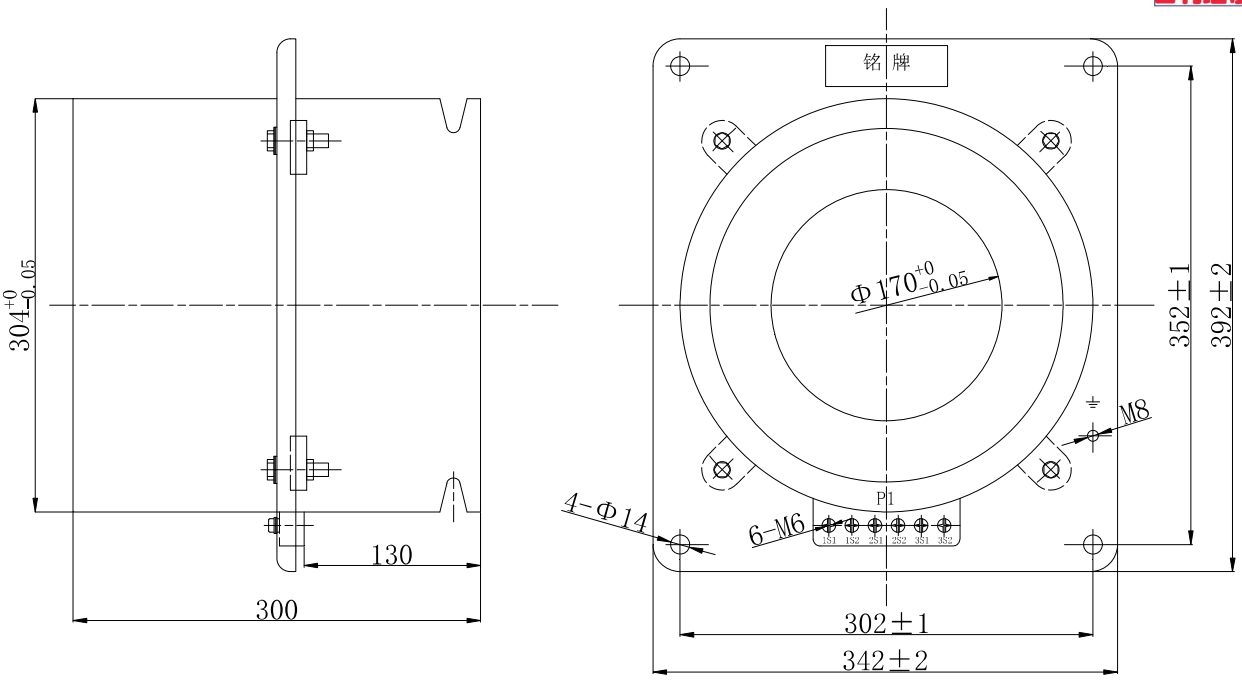

LMZBJ-10Q(4000A-6000A)
净重（Weight）：40-53kg

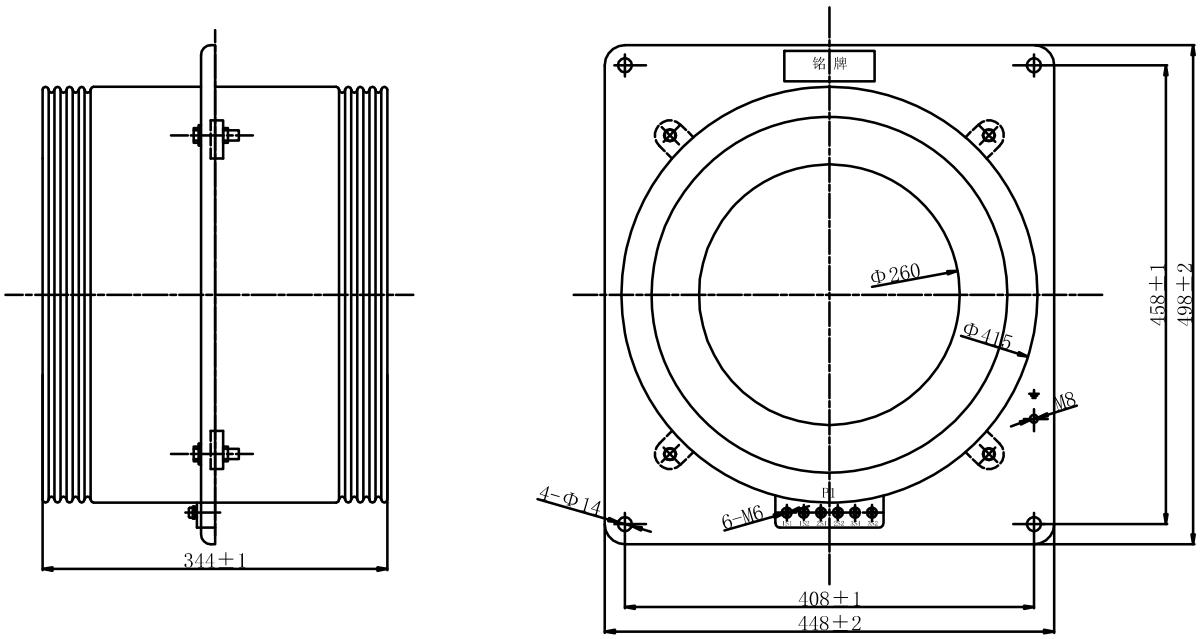

LMZBJ-10Q（Φ260）(6000A)
净重（Weight）：40-53kg

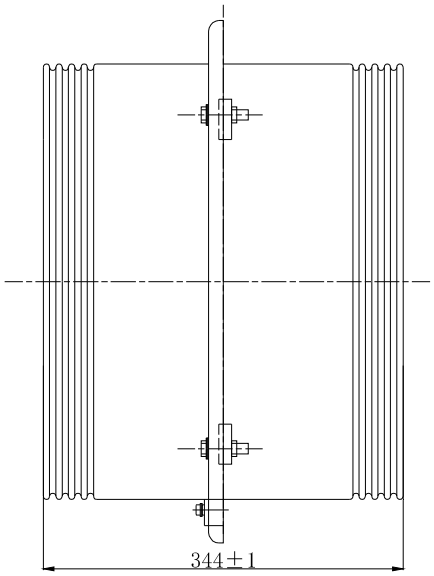

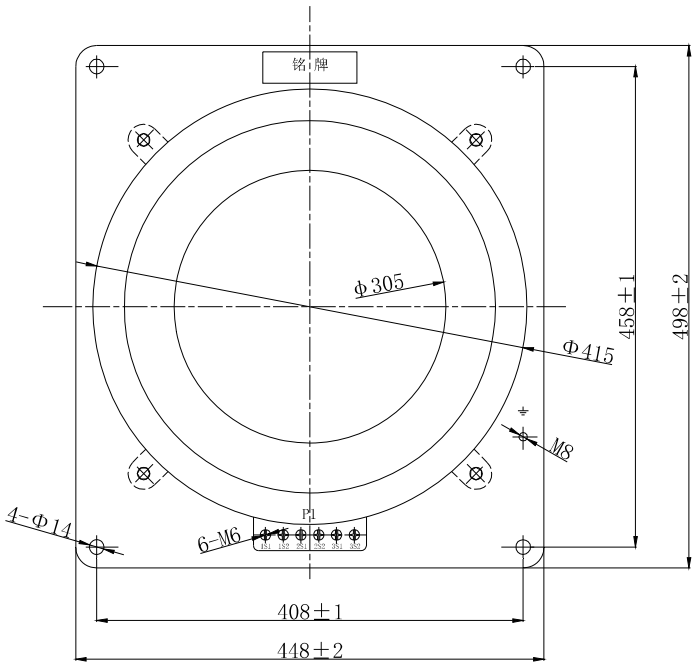

LMZBJ-10Q（Φ305）(6000A)
净重（Weight）：40-53kg

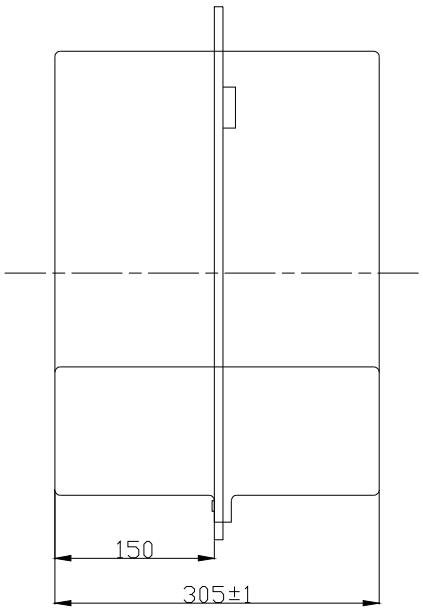

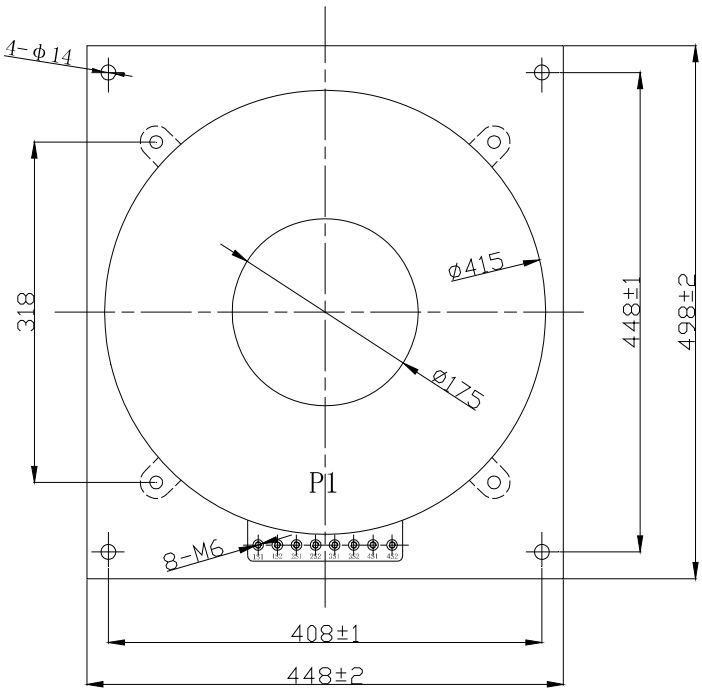

LMZBJ-10Q(8000A)
净重（Weight）：40-53kg

LZZ9-10 电流互感器

型号 Type	额定一次电流 Rated primary current (A)	准确级组合 Accuracy classes combination	额定输出 Rated output (VA)	额定短时热电流 Rated short-time thermal current (kA/1s)	额定动稳定电流 Rated dynamic current (kA)
LZZ9-10	10, 15, 20, 25, 30, 40, 50, 75, 100, 150, 200	0.2, 0.2S	10, 15	200In	500In
		0.5, 0.5S	10, 15		
	300-400	0.2, 0.2S	10, 15	45	112.5
		0.5, 0.5S	10, 15		
	500-600	0.2, 0.2S	10, 15	63	157.5
		0.5, 0.5S	10, 15		
	800-1000	0.2, 0.2S	10, 15	80	200
		0.5, 0.5S	10, 15		

外形尺寸图
Overall dimensions

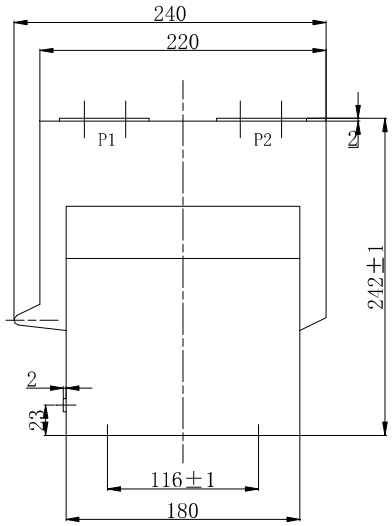

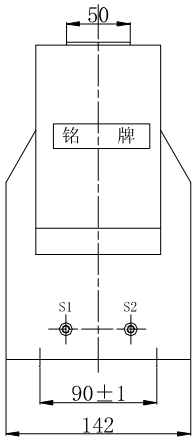

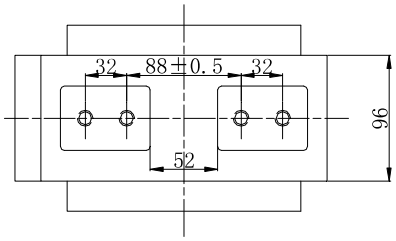

净重（Weight）：13kg

LZZB6-10Q，LZZJB6-10Q, LZZQB6-10Q 电流互感器

型号 Type	额定一次电流 Rated primary current (A)	准确级组合 Accuracy classes combination	额定输出 Rated output (VA)	额定短时热电流 Rated short-time thermal current (kA/1s)	额定动稳定电流 Rated dynamic current (kA)
LZZB6-10Q LZZJB6-10Q	10	0.2/10P10	10/15	2.0	5.0
		0.5/10P10	10/15	2.0	5.0
		0.2/10P15	10/15	1.0	2.5
		0.5/10P15	15/15	1.0	2.5
	15	0.2/10P10	10/15	4.5	11.25
		0.5/10P10	10/15	4.5	11.25
		0.2/10P15	10/15	1.5	3.75
		0.5/10P15	15/15	1.5	3.75
	20	0.2/10P10	10/15, 10/20	6	15
		0.5/10P10	10/15, 10/20	6	15
		0.2/10P15	10/15, 10/20	3	7.5
		0.5/10P15	15/15, 20/20	3	7.5
	30	0.2/10P10	10/15, 10/20	12	30
		0.5/10P10	10/15, 10/20	12	30
		0.2/10P15	10/15, 10/20	4.5	11.25
		0.5/10P15	15/15, 20/20	4.5	11.25
		0.2/10P20	10/15	3.6	9
		0.5/10P20	10/15	3.6	9
	40	0.2/10P10	10/15, 10/20	16	40
		0.5/10P10	10/15, 10/20	16	40
		0.2/10P15	15/15, 10/20	6	15
		0.5/10P15	15/15, 20/20	6	15
		0.2/10P20	10/15	4.8	12
		0.5/10P20	10/15	4.8	12
	50	0.2/10P10	10/15, 10/20	21	52.5
		0.5/10P10	10/15, 10/20	21	52.5
		0.2/10P15	15/15, 10/20	7.5	18.75
		0.5/10P15	15/15, 20/20	7.5	18.75
		0.2/10P20	10/15	6	15
		0.5/10P20	10/15	6	15
	60	0.2/10P10	10/15, 10/20	21	52.5
		0.5/10P10	10/15, 10/20	21	52.5
		0.2/10P15	15/15, 10/20	9	22.5
		0.5/10P15	15/15, 20/20	9	22.5
		0.2/10P20	10/15	7.2	18
		0.5/10P20	10/15	7.2	18

型号 Type	额定一次电流 Rated primary current (A)	准确级组合 Accuracy classes combination	额定输出 Rated output (VA)	额定短时热电流 Rated short-time thermal current (kA/1s)	额定动稳定电流 Rated dynamic current (kA)
LZZB6-10Q LZZJB6-10Q	75	0.2/10P10	10/15, 10/20	31.5	78.75
		0.5/10P10	10/15, 10/20	31.5	78.75
		0.2/10P15	15/15, 10/20	10	25
		0.5/10P15	15/15, 20/20	10	25
		0.2/10P20	10/15	9	22.5
		0.5/10P20	10/15	9	22.5
	100	0.2/10P10	10/15, 10/20	45	112.5
		0.5/10P10	10/15, 10/20	45	112.5
		0.2/10P15	15/15, 10/20	21	52.5
		0.5/10P15	15/15, 20/20	21	52.5
		0.2/10P20	10/15	12	30
		0.5/10P20	10/15	12	30
	150	0.2/10P10	10/15, 10/20	45	112.5
		0.5/10P10	10/15, 10/20	45	112.5
		0.2/10P15	15/15, 10/20	31.5	78.75
		0.5/10P15	15/15, 20/20	31.5	78.75
		0.2/10P20	10/15	18	45
		0.5/10P20	10/15	18	45
	200, 250	0.2/10P10	10/15, 10/20	45	112.5
		0.5/10P10	10/15, 10/20	45	112.5
		0.2/10P15	15/15, 10/20	45	112.5
		0.5/10P15	15/15, 20/20	45	112.5
		0.2/10P20	10/15	24	60
		0.5/10P20	10/15	24	60
	300	0.2/10P10	10/30, 15/20	63	157.5
		0.5/10P10	20/30, 15/20	63	157.5
		0.2/10P15	15/15, 10/20	45	112.5
		0.5/10P15	15/15, 20/20	45	112.5
		0.2/10P20	15/15	36	90
		0.5/10P20	15/15	36	90
	400	0.2/10P10	10/30, 15/20	63	157.5
		0.5/10P10	20/30, 15/20	63	157.5
		0.2/10P15	15/15, 10/20	63	157.5
		0.5/10P15	20/20	63	157.5
		0.2/10P20	15/15	48	120
		0.5/10P20	15/15	48	120
	500	0.2/10P10	10/30, 15/20	63	157.5

型号 Type	额定一次电流 Rated primary current (A)	准确级组合 Accuracy classes combination	额定输出 Rated output (VA)	额定短时热电流 Rated short-time thermal current (kA/1s)	额定动稳定电流 Rated dynamic current (kA)
LZZB6-10Q LZZJB6-10Q	500	0.5/10P10	20/30, 15/20	63	157.5
		0.2/10P15	15/15, 10/20	63	157.5
		0.5/10P15	20/20	63	157.5
		0.2/10P20	15/15	63	157.5
		0.5/10P20	15/15	63	157.5
	600	0.2/10P10	10/30, 15/20	80	200
		0.5/10P10	20/30, 15/20	80	200
		0.2/10P15	15/15, 10/20	80	200
		0.5/10P15	20/20	80	200
		0.2/10P20	15/15	80	200
		0.5/10P20	15/15	80	200
	800	0.2/10P10	20/20, 15/30	80	200
		0.5/10P10	20/20, 30/30	80	200
		0.2/10P15	20/15, 15/20	80	200
		0.5/10P15	20/15, 30/20	80	200
		0.2/10P20	15/20	80	200
		0.5/10P20	15/20	80	200
	1000	0.2/10P10	20/20, 15/30	80	200
		0.5/10P10	20/20, 30/30	80	200
		0.2/10P15	20/15, 15/20	80	200
		0.5/10P15	20/15, 30/20	80	200
		0.2/10P20	15/20	80	200
		0.5/10P20	15/20	80	200
	1200(1250)	0.2/10P10	20/20, 15/30	100	250
		0.5/10P10	20/20, 30/30	100	250
		0.2/10P15	20/15, 15/20	100	250
		0.5/10P15	20/15, 30/20	100	250
		0.2/10P20	15/20	100	250
		0.5/10P20	15/20	100	250

型号 Type	额定一次电流 Rated primary current (A)	准确级组合 Accuracy classes combination	额定输出 Rated output (VA)	额定短时热电流 Rated short-time thermal current (kA/1s)	额定动稳定电流 Rated dynamic current (kA)
LZZQB6-10Q	30	0.2/10P10	15/20	6	15
		0.5/10P10	15/20	6	15
		0.2/10P15	15/20	6	15
		0.5/10P15	15/20	6	15
		0.2/10P20	15/15	4.25	10.625
		0.5/10P20	15/15	4.25	10.625
	40	0.2/10P10	15/20	12	30
		0.5/10P10	15/20	12	30
		0.2/10P15	15/20	12	30
		0.5/10P15	15/20	12	30
		0.2/10P20	15/15	8	20
		0.5/10P20	15/15	8	20
	50	0.2/10P10	15/20	16	40
		0.5/10P10	15/20	16	40
		0.2/10P15	15/20	16	40
		0.5/10P15	15/20	16	40
		0.2/10P20	15/15	10	25
		0.5/10P20	15/15	10	25
	75	0.2/10P10	15/20	20	50
		0.5/10P10	15/20	20	50
		0.2/10P15	15/20	20	50
		0.5/10P15	15/20	20	50
		0.2/10P20	15/15	15	37.5
		0.5/10P20	15/15	15	37.5
	100, 150 200, 300	0.2/10P10	15/20	31.5	78.75
		0.5/10P10	15/20	31.5	78.75
		0.2/10P15	15/20	31.5	78.75
		0.5/10P15	15/20	31.5	78.75
		0.2/10P20	15/15	20	50
		0.5/10P20	15/15	20	50
	400	0.2/10P10	20/30	31.5	78.75
		0.5/10P10	20/30	31.5	78.75
		0.2/10P15	20/25, 25/20	31.5	78.75
		0.5/10P15	20/25, 25/20	31.5	78.75
		0.2/10P20	15/20, 20/15	20	50
		0.5/10P20	15/20, 20/15	20	50
	500	0.2/10P10	20/30	44.5	111.25
		0.5/10P10	20/30	44.5	111.25

型号 Type	额定一次电流 Rated primary current (A)	准确级组合 Accuracy classes combination	额定输出 Rated output (VA)	额定短时热电流 Rated short-time thermal current (kA/1s)	额定动稳定电流 Rated dynamic current (kA)
LZZQB6-10Q	500	0.2/10P15	20/25, 25/20	44.5	111.25
		0.5/10P15	20/25, 25/20	44.5	111.25
		0.2/10P20	15/20, 20/15	30	75
		0.5/10P20	15/20, 20/15	30	75
	600, 800	0.2/10P10	20/40, 30/30	44.5	111.25
		0.5/10P10	30/40, 40/30	44.5	111.25
		0.2/10P15	20/30, 25/25	44.5	111.25
		0.5/10P15	30/30, 40/30	44.5	111.25
		0.2/10P20	25/25, 25/20	30	75
		0.5/10P20	20/25, 25/20	30	75
	1000, 1200 1250, 1500	0.2/10P10	20/40, 30/30	63	157.5
		0.5/10P10	20/40, 40/30	63	157.5
		0.2/10P15	20/30, 25/25	63	157.5
		0.5/10P15	30/30, 40/30	63	157.5
		0.2/10P20	20/25, 25/20	45	112.5
		0.5/10P20	20/25, 25/20	45	112.5

外形尺寸图
Overall dimensions

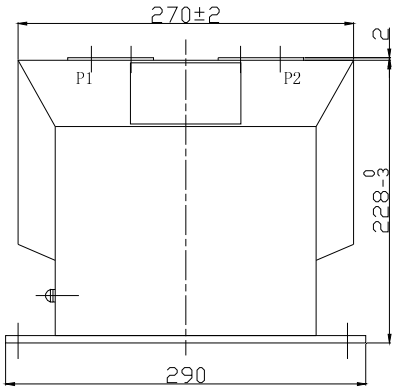

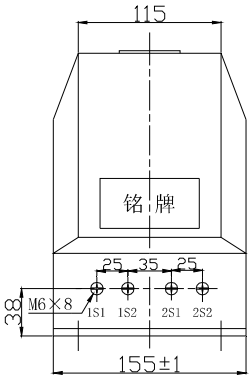

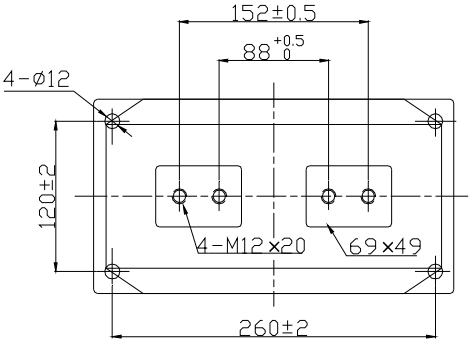

LZZ(J)B6-10Q
净重（Weight）：22-26kg

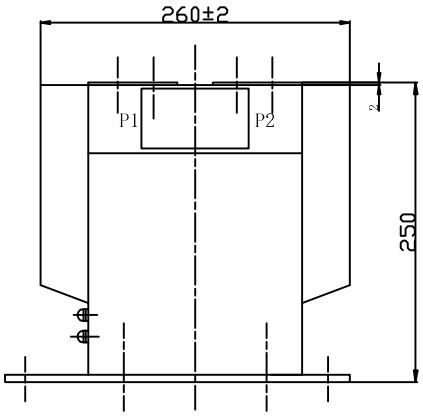

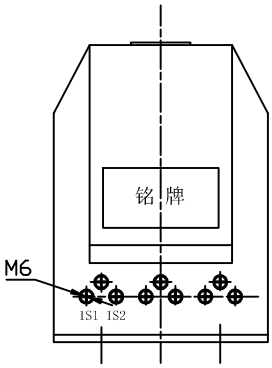

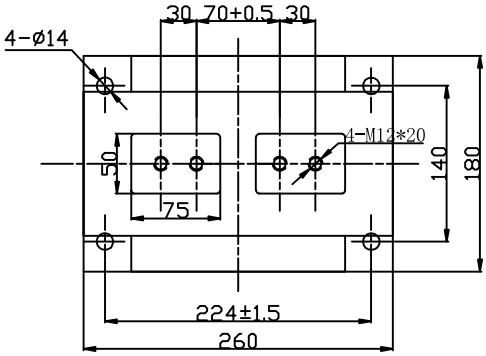

LZZQB6-10Q
30-400A

净重（Weight）：24-26kg

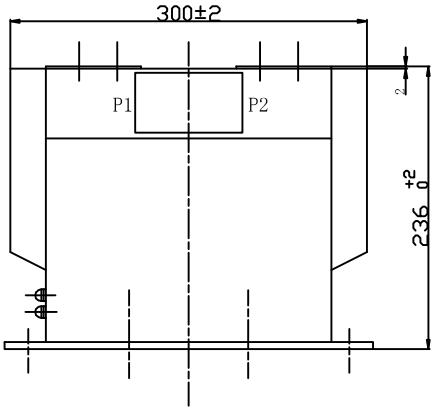

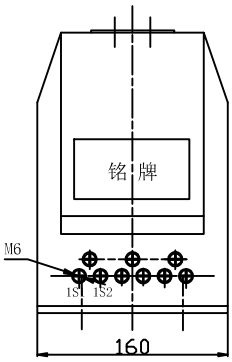

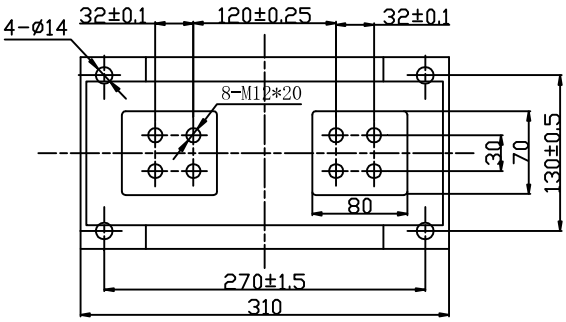

LZZQB6-10Q
500-1500A

净重（Weight）：24-26kg

LZZBJ9-10(H), LZZBJ9-10A(H), LZZBJ9-10A1 LZZBJ9-10C1, LZZBJ9-10C2, LZZBJ9-10Q 电流互感器

型号 Type	额定一次电流 Rated primary current (A)	准确级组合 Accuracy classes combination	额定输出 Rated output (VA)	额定短时热电流 Rated short-time thermal current (kA/1s)	额定动稳定电流 Rated dynamic current (kA)
LZZBJ9-10(H) LZZBJ9-10A(H) LZZBJ9-10A1 LZZBJ9-10C1 LZZBJ9-10C2 LZZBJ9-10Q	10	0.2/10P10	10/15	2.0	5.0
		0.5/10P10	10/15	2.0	5.0
		0.2/10P15	10/15	1.0	2.5
		0.5/10P15	15/15	1.0	2.5
	15, 20	0.2/10P10	10/15	4.5	11.25
		0.5/10P10	10/15	4.5	11.25
		0.2/10P15	10/15	1.5	3.75
		0.5/10P15	15/15	1.5	3.75
	25	0.2S/0.5	10/15	6	15
		0.2/10P10	10/15, 10/20	6	15
		0.5/10P10	10/15, 10/20	6	15
		0.5S/10P10	10/15	3	7.5
		0.2/10P15	10/15, 10/20	3	7.5
		0.5/10P15	10/15, 10/20	3	7.5
	30	0.2/0.2	10/10	12	30
		0.2/10P10	10/15, 10/20	12	30
		0.2S/10P10	10/15	4.5	11.25
		0.5/10P10	10/15, 10/20	12	30
		0.2/10P15	10/15, 10/20	4.5	11.25
		0.5/10P15	15/15, 20/20	4.5	11.25
		0.2/10P20	10/15	3.6	9
		0.5/10P20	10/15	3.6	9
	40	0.2/10P10	10/15, 10/20	16	40
		0.5/10P10	10/15, 10/20	16	40
		0.2/10P15	15/15, 10/20	6	15
		0.5/10P15	15/15, 20/20	6	15
		0.2/10P20	10/15	4.8	12
		0.5/10P20	10/15	4.8	12
	50	0.2/10P10	10/15, 10/20	21	52.5
		0.2S/10P10	10/15	7.5	18.75
		0.5/10P10	10/20, 10/30	21, 6	52.5, 15
		0.2/10P15	15/15, 10/20	7.5	18.75
		0.2S/10P15	10/15	7.5	18.75
		0.5/10P15	15/15, 20/20	7.5, 4	18.75, 10
		0.2/10P20	10/15	6	15
		0.5/10P20	10/15	6	15
		0.2/0.5/10P10	10/10/15	4.8	12
	60	0.2/10P10	10/15, 10/20	21	52.5
		0.2S/10P10	10/15	10	25
		0.5/10P10	10/15, 10/20	21, 8	52.5, 20
		0.2/10P15	15/15, 10/20	9	22.5
		0.5/10P15	15/15, 20/20	9	22.5
		0.2/10P20	10/15	7.2	18
		0.5/10P20	10/15	7.2	18
		0.2/0.5/10P15	10/10/15	5	12.5
	75	0.2/10P10	10/15, 10/20	31.5	80
		0.2S/10P10	10/15	10	25
		0.5/10P10	10/15, 10/20	31.5, 8	80, 20
		0.2/10P15	15/15, 10/20	10	25
		0.5/10P15	15/15, 20/20	10	25

型号 Type	额定一次电流 Rated primary current (A)	准确级组合 Accuracy classes combination	额定输出 Rated output (VA)	额定短时热电流 Rated short-time thermal current (kA/1s)	额定动稳定电流 Rated dynamic current (kA)
LZZBJ9-10(H) LZZBJ9-10A(H) LZZBJ9-10A1 LZZBJ9-10C1 LZZBJ9-10C2 LZZBJ9-10Q	75	0.2/10P20	10/15	9	22.5
		0.5/10P20	10/15	9	22.5
		0.2/0.5/10P15	10/10/10	5	12.5
	100	0.2/10P10	10/15, 10/20	45	112.5
		0.2S/10P10	10/15	12	30
		0.5/10P10	10/15, 10/20	45, 12	112.5, 30
		0.2/10P15	15/15, 10/20	21	52.5
		0.5/10P15	15/15, 15/20, 20/20	21	52.5
		0.2/10P20	10/15	12	30
		0.5/10P20	10/15	12	30
		0.2/0.5/10P10	10/10/15	10	25
	150	0.2/10P10	10/15, 10/20	45	112.5
		0.2S/10P10	10/15, 15/15	22.5	56.25
		0.5/10P10	10/15, 10/20	45	112.5
		0.2/10P15	15/15, 10/20	31.5, 15	80, 37.5
		0.5/10P15	15/15, 15/20, 20/20	31.5	80
		0.2/10P20	10/15	18	45
		0.5/10P20	10/15	18	45
		0.2/0.5/10P10	10/10/15	16	40
	200, 250	0.2/10P10	10/15, 10/20	45	112.5
		0.2S/10P10	15/15	30	75
		0.5/10P10	10/15, 10/20	45, 26	112.5, 65
		0.2/10P15	15/15, 10/20	45, 20	112.5, 50
		0.5/10P15	15/15, 20/20	45	112.5
		0.2/10P20	10/15	24	60
		0.2S/10P20	15/15	30	75
		0.5/10P20	10/15	24	60
		0.2S/0.5/10P10	10/10/15	26	65
	300	0.2/10P10	10/30, 15/20	63	157.5
		0.5/10P10	15/20, 10/30, 20/30	63, 45, 24	157.5, 112.5, 60
		0.2/10P15	15/15, 10/20	45	112.5
		0.5/10P15	15/15, 15/20, 20/20	45	112.5
		0.2/10P20	15/15	36	90
		0.5/10P20	15/15	36	90
		0.2/0.5/10P10	10/10/15	45	112.5
		0.2S/0.5/10P10	10/10/15	45	112.5
	400	0.2/10P15	15/15, 10/20	63	157.5
		0.5/10P15	20/20	63	157.5
		0.2/10P20	15/15	48	120
		0.2S/10P20	10/15	26	65
		0.5/10P20	15/15	48	120
	500	0.2/10P10	10/30, 15/20	63	157.5
		0.5/10P10	20/30, 15/20	63	157.5
		0.2/10P15	15/15, 10/20	63	157.5
		0.5/10P15	15/20, 20/20	63	157.5
		0.2/10P20	15/15	63	157.5
		0.5/10P20	15/15	63	157.5
		10P10/10P10	15/15	45	112.5

型号 Type	额定一次电流 Rated primary current (A)	准确级组合 Accuracy classes combination	额定输出 Rated output (VA)	额定短时热电流 Rated short-time thermal current (kA/1s)	额定动稳定电流 Rated dynamic current (kA)
LZZBJ9-10(H) LZZBJ9-10A(H) LZZBJ9-10A1 LZZBJ9-10C1 LZZBJ9-10C2 LZZBJ9-10Q	500	10P10/10P15	15/15	45	112.5
		0.2/0.5/10P10	10/10/15	45	112.5
		0.2S/0.5/10P20	10/10/15	45	112.5
		0.5/10P10/10P10	10/10/10	45	112.5
	600	0.2/10P10	10/30, 15/20	80, 45	200, 112.5
		0.5/10P10	20/30, 15/20	80	200
		0.2/10P15	15/15, 10/20	80	200
		0.5/10P15	20/20	80	200
		0.2/10P20	15/15	80	200
		0.5/10P20	15/15	80	200
		5P20/5P20	10/10	45	112.5
		0.2/10P20/10P20	10/10/10	45	112.5
		0.5/5P20/5P20	10/10/10	45	112.5
	750	0.2/10P10	10/30, 15/20	80, 45	200, 112.5
		0.5/10P10	20/30, 15/20	80	200
		0.2/10P15	15/15, 10/20	80	200
		0.5/10P15	20/20	80	200
		0.2/10P20	15/15	80	200
		0.5/10P20	15/15	80	200
		0.5/10P10/10P10	10/15/15	45	112.5
	800	0.2/10P10	20/20, 15/30	80	200
		0.5/10P10	20/20, 30/30	80	200
		0.2/10P15	20/15, 15/20	80	200
		0.5/10P15	20/15, 30/20	80	200
		0.2/10P20	15/20	80	200
		0.5/10P20	15/20	80	200
		0.5/10P10/10P10	15/15/15	50	125
	1000	0.2/10P10	20/20, 15/30	80	200
		0.5/10P10	20/20, 30/30	80	200
		0.2/10P15	20/15, 15/20	80	200
		0.5/10P15	20/15, 30/20	80	200
		0.2/10P20	15/20	80	200
		0.5/10P20	15/20	80	200
		10P10/10P15	15/15	80	200
		0.5/10P10/10P10	15/15/15	80	200
	1200(1250)	0.2/10P10	20/20, 15/30	100	250
		0.5/10P10	20/20, 30/30	100	250
		0.2/10P15	20/15, 15/20	100	250
		0.5/10P15	20/15, 30/20	100	250
		0.2/10P20	15/20	100	250
		0.5/10P20	15/20	100	250
		0.5/10P10/10P10	15/10/10	63	157.5

型号 Type	额定一次电流 Rated primary current (A)	准确级组合 Accuracy classes combination	额定输出 Rated output (VA)	额定短时热电流 Rated short-time thermal current (kA/1s)	额定动稳定电流 Rated dynamic current (kA)
LZZBJ9-10A LZZBJ9-10C1	1500	0.2/10P10 0.5/10P10 0.2/10P15 0.5/10P15	20/30 30/30 20/20 30/20	100	250
	2000（二次电流5A）				

外形尺寸图

Overall dimensions

净重（Weight）：22-26kg

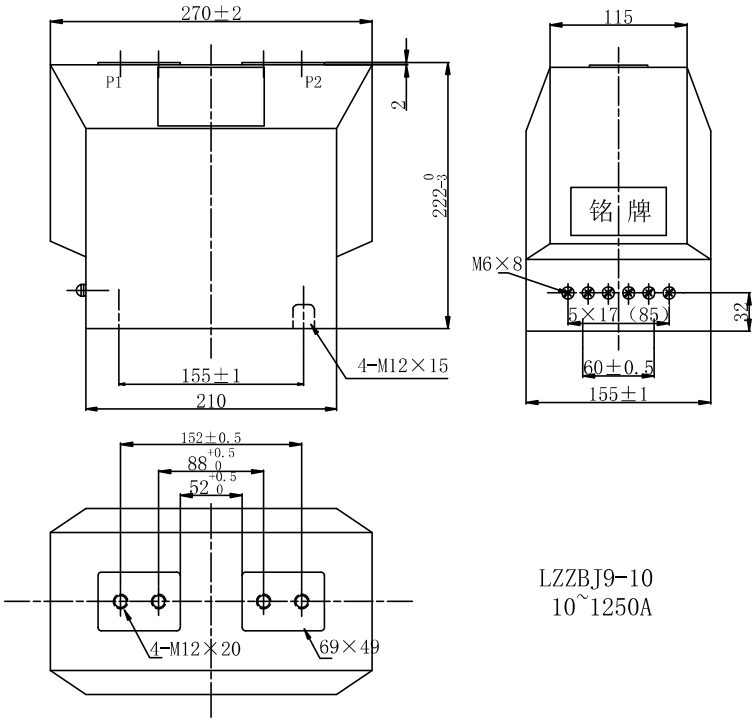

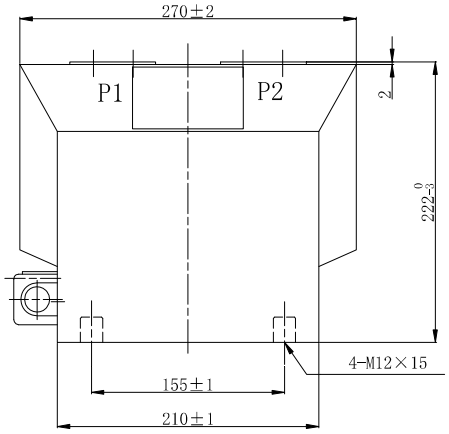

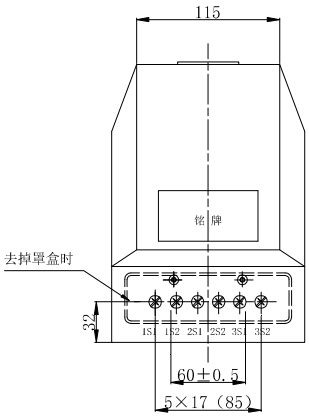

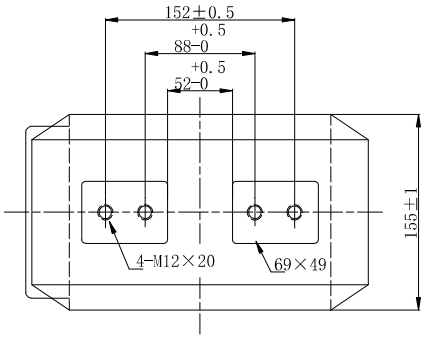

LZZBJ9-10H

10~1250A

无底板加罩盒

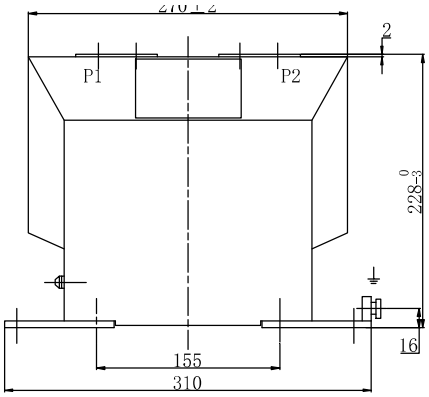

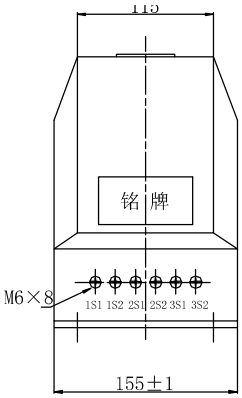

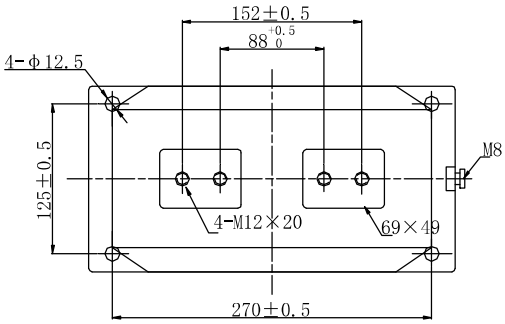

LZZBJ9-10A
LZZBJ9-10A1
(10~1250A)

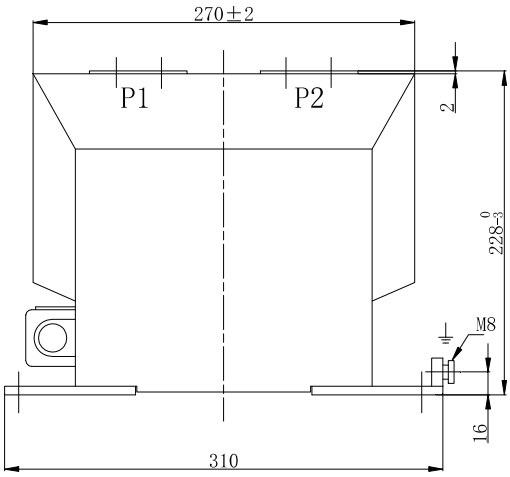

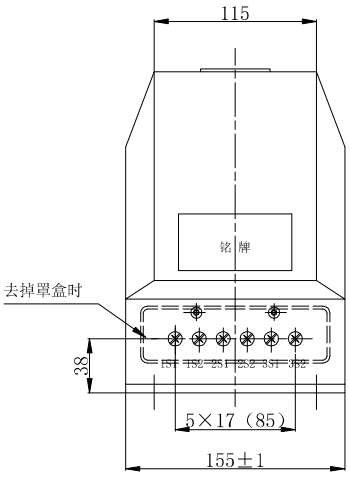

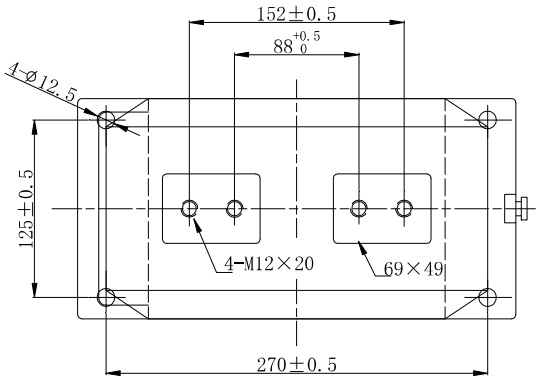

说明：

罩盒在底板的安装孔上方，需在安装完产品后再安装罩盒。

LZZBJ9-10AH

10~1250A

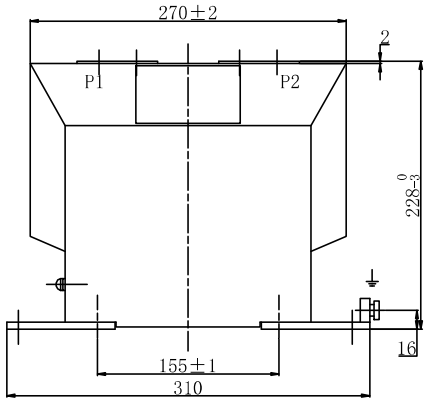

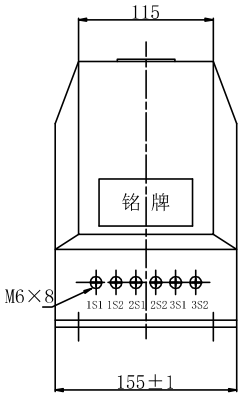

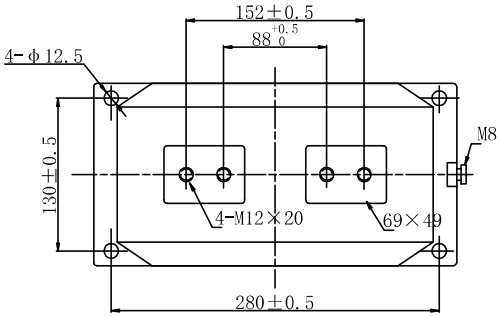

LZZBJ9-10C1

(10~1250A)

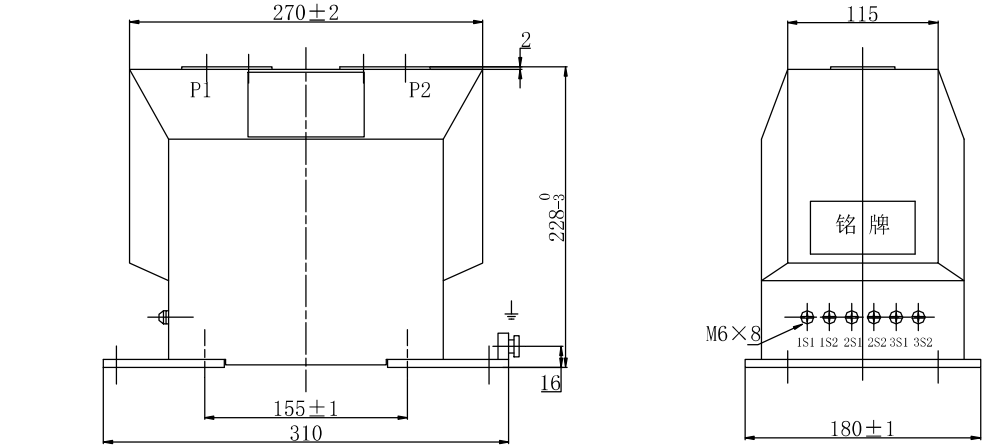

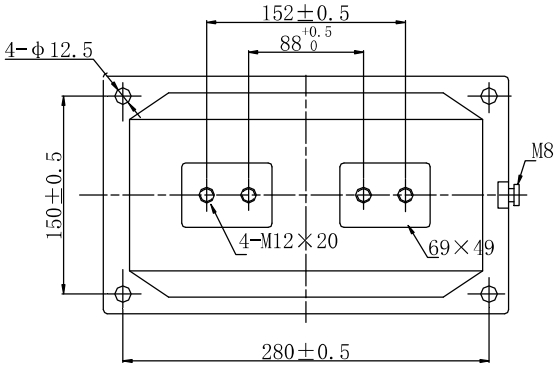

LZZBJ9-10C2
(10~1250A)

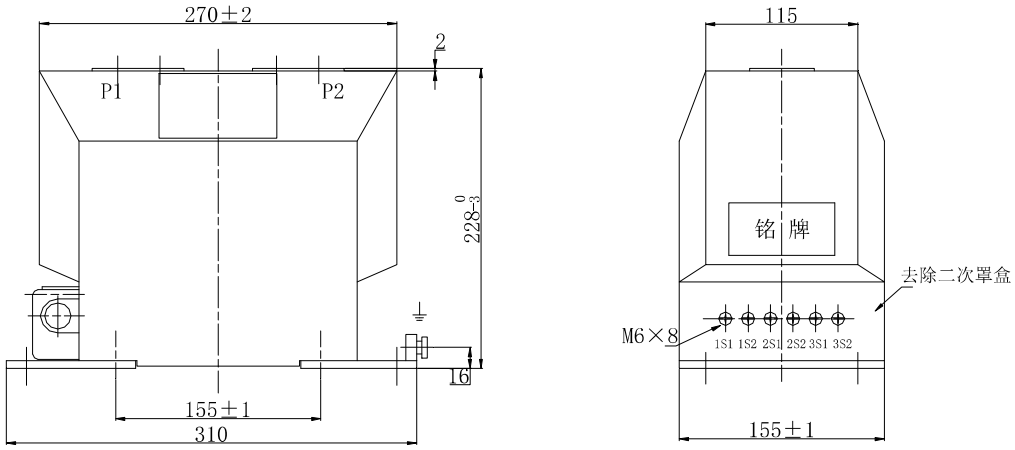

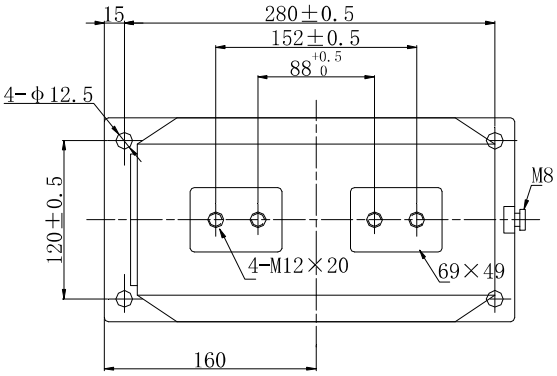

LZZBJ9-10Q
(10~1250A)

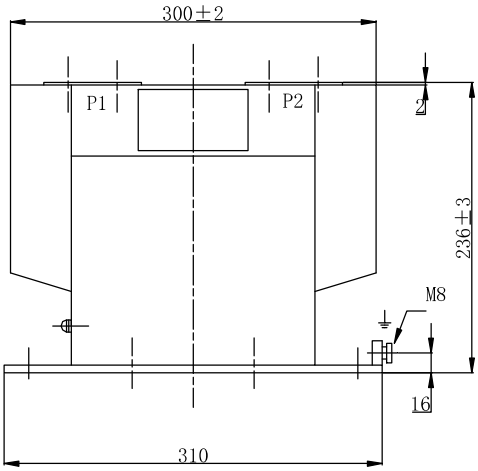

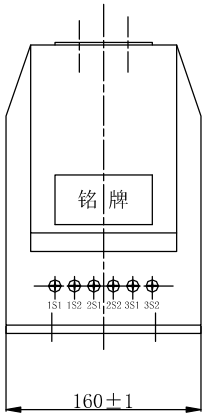

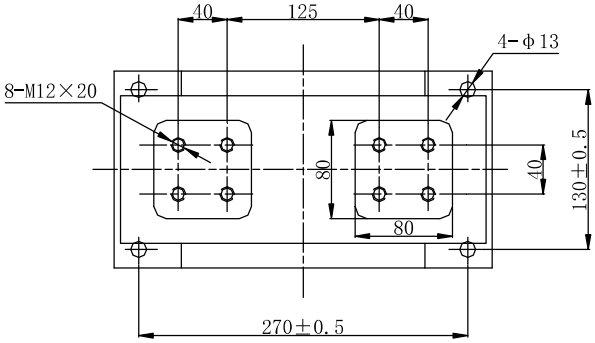

LZZBJ9-10A
(1500~2000A)

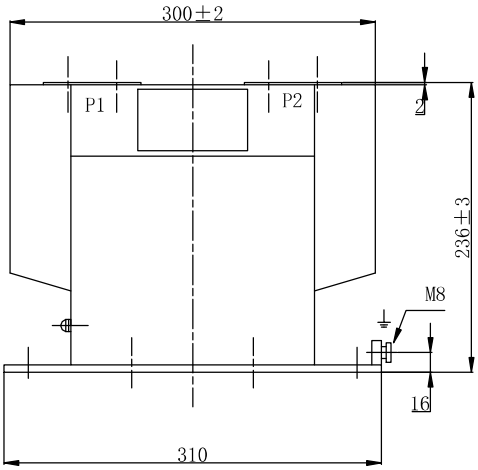

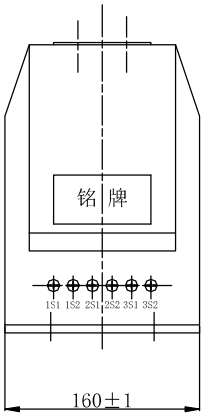

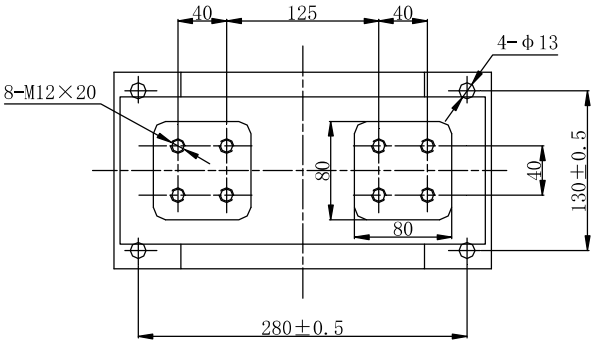

LZZBJ9-10C1
(1500~2000A)

LZZBJ9-10CG(H) 电流互感器

型号 Type	额定一次电流 Rated primary current (A)	准确级组合 Accuracy classes combination	额定输出 Rated output (VA)	额定短时热电流 Rated short-time thermal current (kA/1s)	额定动稳定电流 Rated dynamic current (kA)
LZZBJ9-10CG(H)	20	0.2	10, 15, 20	10	25
		0.5	10, 15, 20	10	25
		0.2S	10, 15, 20	10	25
		0.2/10P10	15/15	7	18
	25	0.2	10, 15	10	25
		0.5	10, 15	10	25
		0.2S	10, 15	10	25
		0.2/0.5	10/15	10	25
		0.2/5P10，0.5/5P10	10/15, 15/15	10	25
	30	0.2	10, 15, 20	10	25
		0.5	10, 15, 20	10	25
		0.2S	10, 15, 20	10	25
		0.2/0.2	10/10, 15/15	10	25
		0.2S/0.5	10/10, 15/15	10	25
		0.2/10P10	10/10，10/15，15/15	10	25
		0.5/10P10	10/10，10/15，15/15	10	25
		0.5/10P15	10/10	10	25
	40	0.2	10, 15, 20	10	25
		0.5	10, 15, 20	20	50
		0.2S	10, 15, 20	10	25
		0.2/0.2	10/10, 15/15	10	25
		0.2S/0.5	10/10, 15/15	10	25
		0.2/10P10，0.5/10P10	10/15, 15/15, 20/20	10	25
		0.5/10P15	10/10	10	25
	50，60	0.2	10, 15, 20	20	50
		0.5	10, 15, 20	25	63
		0.2S	10, 15, 20	20	50
		0.2/0.2，0.2S/0.2	10/10, 15/15	20	50
		0.2/0.5，0.2S/0.5	10/15, 15/15	20	50
		0.2/10P10，0.5/10P10	10/15, 15/15	20	50
		0.2/10P15，0.5/10P15	10/10, 15/15	10	25
		0.2/10P20，0.5/10P20	10/10, 15/15	10	25
		0.2/0.5/10P10	15/15/15	10	25
	75	0.2	10, 15, 20	31.5	80
		0.5	10, 15, 20	31.5	80
		0.2S	10, 15, 20	31.5	80
		0.2/0.2，0.2S/0.2	10/10, 15/15	25	63
		0.2/0.5，0.2S/0.5	10/15, 15/15	25	63
		0.2/10P10，0.5/10P10	10/15, 15/15	25	63
		0.2/10P15，0.5/10P15	10/10, 15/15	12	30
		0.2/10P20，0.5/10P20	10/10, 15/15	12	30
		0.2/0.5/10P10	15/15/15	12	30
	100	0.2	10, 15, 20	40	100
		0.5	10, 15, 20	40	100
		0.2S	10, 15, 20	40	100
		0.2/0.2，0.2S/0.2	10/10, 15/15	40	100
		0.2/0.5，0.2S/0.5	10/15, 15/15	40	100
		0.2/10P10, 0.5/10P10	10/15, 15/15	40	100
		0.2/10P15, 0.5/10P15	10/10, 15/15	20	50
		0.2/10P20, 0.5/10P20	10/10, 15/15	20	50

型号 Type	额定一次电流 Rated primary current (A)	准确级组合 Accuracy classes combination	额定输出 Rated output (VA)	额定短时热电流 Rated short-time thermal current (kA/1s)	额定动稳定电流 Rated dynamic current (kA)
LZZBJ9-10CG(H)	100	0.2/0.5/10P10	15/15/15	20	50
	125	0.2，0.2S，0.5	10, 15	40	100
		0.2/10P10，0.5/10P10	15/15	40	100
		0.2/10P20，0.5/10P20	15/15	20	50
	150	0.2	10, 15, 20	50	125
		0.5	10, 15, 20	50	125
		0.2S	10, 15, 20	50	125
		0.2/0.2，0.2S/0.2	10/10, 15/15	50	125
		0.2/0.5，0.2S/0.5	10/15, 15/15, 20/20	50	125
		0.2/10P10, 0.5/10P10	10/15, 15/15	50	125
		0.2/10P15, 0.5/10P15	10/10, 15/15	40	100
		0.2/10P20, 0.5/10P20	10/10, 15/15	25	63
		0.2/0.5/10P10	15/15/15	25	63
	200，250	0.2	10, 15, 20	50	125
		0.5	10, 15, 20	63	160
		0.2S	10, 15, 20	50	125
		0.2/0.2，0.2S/0.2	10/10, 15/15, 20/20	50	125
		0.2/0.5，0.2S/0.5	10/15, 15/15, 20/20	50	125
		0.2/10P10, 0.5/10P10	10/15, 15/15, 15/20	50	125
		0.2/10P15, 0.5/10P15	10/10, 15/15	31.5	80
		0.2/10P20, 0.5/10P20	10/10, 15/15	31.5	80
		0.2/0.5/10P10	15/15/15	31.5	80
	300，400	0.2	10, 15, 20, 30	63	160
		0.5	10, 15, 20, 30	63	160
		0.2S	10, 15, 20, 30	63	160
		0.2/0.2，0.2S/0.2	10/10, 15/15, 20/20	63	160
		0.2/0.5，0.2S/0.5	10/10, 10/15, 20/20	63	160
		0.2/10P10, 0.5/10P10	10/15, 15/15, 15/20	63	160
		0.2/10P15, 0.5/10P15	10/10, 15/15	40	100
		0.2/10P20, 0.5/10P20	10/10, 15/15	40	100
		0.2/0.5/10P10	15/15/15	40	100
	500, 600, 630	0.2	10, 15, 20, 30	63	160
		0.5	10, 15, 20, 30	63	160
		0.2S	10, 15, 20, 30	63	160
		0.2/0.2，0.2S/0.2	10/10, 15/15, 20/20	63	160
		0.2/0.5，0.2S/0.5	10/15, 15/15, 20/20	63	160
		0.2/10P10, 0.5/10P10	10/15, 15/15, 15/20, 30/30	63	160
		0.2/10P15, 0.5/10P15	10/10, 15/15	63	160
		0.2/10P20, 0.5/10P20	10/10, 15/15	63	160
		0.2/0.5/10P10	15/15/15, 15/15/30	63	160
		0.2/0.5/10P20	15/15/15	63	160
		0.2/10P10/10P20	15/15/15	63	160
	750, 800	0.2	10, 15, 20, 30	80	200
		0.5	10, 15, 20, 30	80	200
		0.2S	10, 15, 20, 30	80	200
		0.2/0.2，0.2S/0.2	10/10, 15/15, 20/20	80	200
		0.2/0.5，0.2S/0.5	10/15, 15/15, 20/20	80	200
		0.2/10P10, 0.5/10P10	10/15, 15/15, 15/20, 30/30	80	200
		0.2/10P15, 0.5/10P15	10/10, 15/15, 30/30	80	200
		0.2/10P20, 0.5/10P20	10/10, 15/15, 30/30	80	200

型号 Type	额定一次电流 Rated primary current (A)	准确级组合 Accuracy classes combination	额定输出 Rated output (VA)	额定短时热电流 Rated short-time thermal current (kA/1s)	额定动稳定电流 Rated dynamic current (kA)
LZZBJ9-10CG(H)	750, 800	0.2/0.5/10P10	15/15/15, 15/15/30	80	200
		0.2/0.5/10P20	15/15/15, 15/15/20	80	200
		0.2/10P10/10P20	15/15/15, 15/15/20	80	200
	1000-2000	0.2	10, 15, 20, 30	100	250
		0.5	10, 15, 20, 30	100	250
		0.2S	10, 15, 20, 30	100	250
		0.2/0.2, 0.2S/0.2	10/10, 15/15, 20/20	100	250
		0.2/0.5, 0.2S/0.5	10/15, 15/15, 20/20	100	250
		0.2/10P10, 0.5/10P10	10/15, 15/15, 15/20, 30/30	100	250
		0.2/10P15, 0.5/10P15	10/10, 15/15, 30/30	100	250
		0.2/10P20, 0.5/10P20	10/10, 15/15, 30/30	100	250
		0.2/0.5/10P10	15/15/15, 15/15/30	100	250
		0.2/0.5/10P20	15/15/15, 15/15/20	100	250
		0.2/10P10/10P20	15/15/15, 15/15/20	100	250
	2500	0.2	10, 15, 20, 30	100	250
		0.5	10, 15, 20, 30	100	250
		0.2S	10, 15, 20, 30	100	250
		0.2/0.2, 0.2S/0.2	10/10, 15/15, 20/20	100	250
		0.2/0.5, 0.2S/0.5	10/15, 15/15, 20/20	100	250
		0.2/10P10, 0.5/10P10	10/15, 15/15, 15/20, 30/30	100	250
		0.2/10P15, 0.5/10P15	10/10, 15/15, 20/20	100	250
		0.2/10P20, 0.5/10P20	10/10, 15/15	100	250
		0.2/0.5/10P10	15/15/15	100	250

外形尺寸图
Overall dimensions

净重（Weight）：38kg

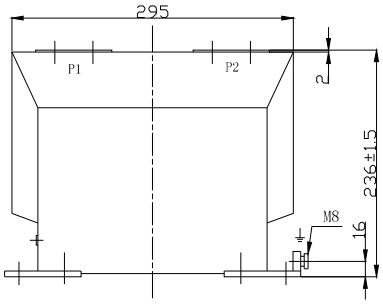

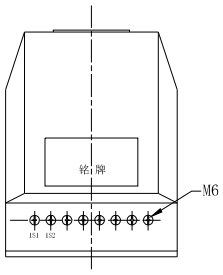

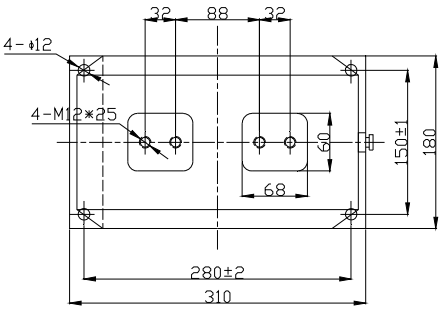

I1n≤800A

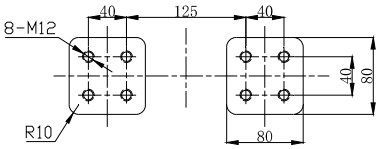

1000A≤I1n≤2500A

LZZBJ9-10CG
净重：38kg
Weight is about ： 38kgs

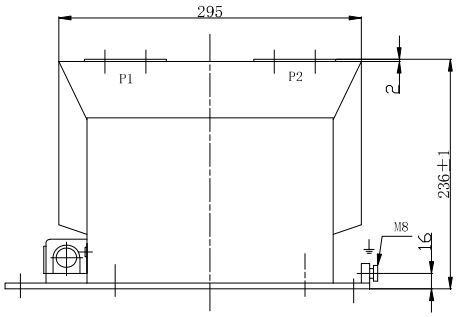

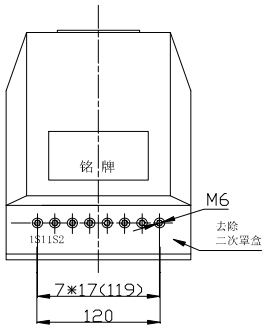

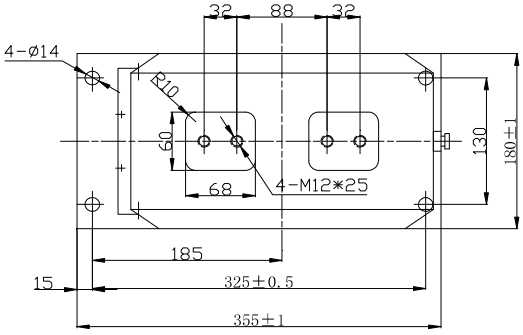

I1n≤800A

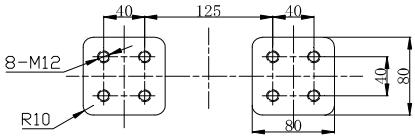

1000A≤I1n≤2500A

LZZBJ9-10CGH1

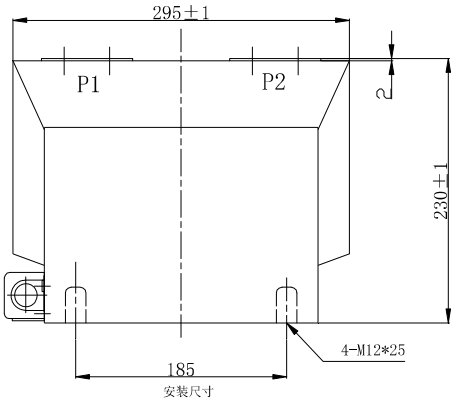

安装尺寸

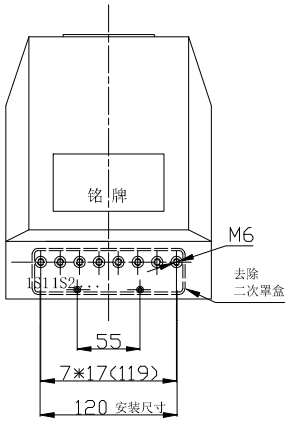

安装尺寸

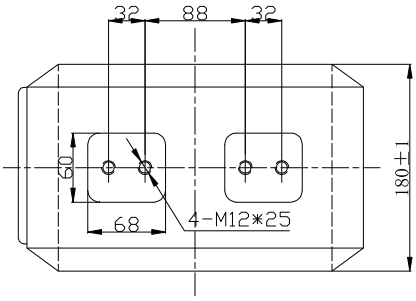

I1n≤800A

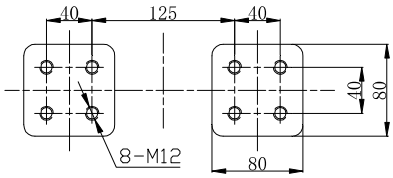

1000A≤I1n≤3150A

LZZBJ9-10CGH2
无底板加罩盒

LZZBJ9-10GA 电流互感器

型号 Type	额定一次电流 Rated primary current (A)	准确级组合 Accuracy classes combination	额定输出 Rated output (VA)	额定短时热电流 Rated short-time thermal current (kA/1s)	额定动稳定电流 Rated dynamic current (kA)
LZZBJ9-10GA	10	0.2/10P10	10/15	2.0	5.0
		0.5/10P10	10/15	2.0	5.0
		0.2/10P15	10/15	1.0	2.5
		0.5/10P15	15/15	1.0	2.5
	15，20	0.2/10P10	10/15	4.5	11.25
		0.5/10P10	10/15	4.5	11.25
		0.2/10P15	10/15	1.5	3.75
		0.5/10P15	15/15	1.5	3.75
	25	0.2S/0.5	10/15	6	15
		0.2/10P10	10/15, 10/20	6	15
		0.5/10P10	10/15, 10/20	6	15
		0.5S/10P10	10/15	3	7.5
		0.2/10P15	10/15, 10/20	3	7.5
		0.5/10P15	10/15, 10/20	3	7.5
	30	0.2/0.2	10/10	12	30
		0.2/10P10	10/15, 10/20	12	30
		0.2S/10P10	10/15	4.5	11.25
		0.5/10P10	10/15, 10/20	12	30
		0.2/10P15	10/15, 10/20	4.5	11.25
		0.5/10P15	15/15, 20/20	4.5	11.25
		0.2/10P20	10/15	3.6	9
		0.5/10P20	10/15	3.6	9
	40	0.2/10P10	10/15, 10/20	16	40
		0.5/10P10	10/15, 10/20	16	40
		0.2/10P15	15/15, 10/20	6	15
		0.5/10P15	15/15, 20/20	6	15
		0.2/10P20	10/15	4.8	12
		0.5/10P20	10/15	4.8	12
	50	0.2/10P10	10/15, 10/20	21	52.5
		0.2S/10P10	10/15	7.5	18.75
		0.5/10P10	10/20, 10/30	21，6	52.5，15
		0.2/10P15	15/15, 10/20	7.5	18.75
		0.2S/10P15	10/15	7.5	18.75
		0.5/10P15	15/15, 20/20	7.5，4	18.75, 10
		0.2/10P20	10/15	6	15
		0.5/10P20	10/15	6	15
		0.2/0.5/10P10	10/10/15	4.8	12

型号 Type	额定一次电流 Rated primary current (A)	准确级组合 Accuracy classes combination	额定输出 Rated output (VA)	额定短时热电流 Rated short-time thermal current (kA/1s)	额定动稳定电流 Rated dynamic current (kA)
LZZBJ9-10GA	60	0.2/10P10	10/15, 10/20	21	52.5
		0.2S/10P10	10/15	10	25
		0.5/10P10	10/15, 10/20	21，8	52.5，20
		0.2/10P15	15/15, 10/20	9	22.5
		0.5/10P15	15/15, 20/20	9	22.5
		0.2/10P20	10/15	7.2	18
		0.5/10P20	10/15	7.2	18
		0.2/0.5/10P15	10/10/15	5	12.5
	75	0.2/10P10	10/15, 10/20	31.5	80
		0.2S/10P10	10/15	10	25
		0.5/10P10	10/15, 10/20	31.5, 8	80, 20
		0.2/10P15	15/15, 10/20	10	25
		0.5/10P15	15/15, 20/20	10	25
		0.2/10P20	10/15	9	22.5
		0.5/10P20	10/15	9	22.5
		0.2/0.5/10P15	10/10/10	5	12.5
	100	0.2/10P10	10/15, 10/20	45	112.5
		0.2S/10P10	10/15	12	30
		0.5/10P10	10/15, 10/20	45, 12	112.5, 30
		0.2/10P15	15/15, 10/20	21	52.5
		0.5/10P15	15/15, 15/20, 20/20	21	52.5
		0.2/10P20	10/15	12	30
		0.5/10P20	10/15	12	30
		0.2/0.5/10P15	10/10/15	10	25
	150	0.2/10P10	10/15, 10/20	45	112.5
		0.2S/10P10	10/15, 15/15	22.5	56.25
		0.5/10P10	10/15, 10/20	45	112.5
		0.2/10P15	15/15, 10/20	31.5, 15	80, 37.5
		0.5/10P15	15/15, 15/20	31.5	80
		0.2/10P20	10/15	18	45
		0.5/10P20	10/15	18	45
		0.2/0.5/10P10	10/10/15	16	40
	200, 250	0.2/10P10	10/15, 10/20	45	112.5
		0.2S/10P10	15/15	30	75
		0.5/10P10	10/15, 10/20	45, 26	112.5, 65
		0.2/10P15	15/15, 10/20	45, 20	112.5, 50
		0.5/10P15	15/15, 20/20	45	112.5

型号 Type	额定一次电流 Rated primary current (A)	准确级组合 Accuracy classes combination	额定输出 Rated output (VA)	额定短时热电流 Rated short-time thermal current (kA/1s)	额定动稳定电流 Rated dynamic current (kA)
LZZBJ9-10GA	200, 250	0. 2/10P20	10/15	24	60
		0. 2S/10P20	15/15	30	75
		0. 5/10P20	10/15	24	60
		0. 2S/0. 5/10P10	10/10/15	26	65
	300	0. 2/10P10	10/30, 15/20	63	157. 5
		0. 5/10P10	15/20, 10/30, 20/30	63, 45, 24	157. 5, 112. 5, 60
		0. 2/10P15	15/15, 10/20	45	112. 5
		0. 5/10P15	15/15, 15/20, 20/20	45	112. 5
		0. 2/10P20	15/15	36	90
		0. 5/10P20	15/15	36	90
		0. 2/0. 5/10P10	10/10/15	45	112. 5
		0. 2S/0. 5/10P10	10/10/15	45	112. 5
	400	0. 2/10P15	15/15, 10/20	63	157. 5
		0. 5/10P15	20/20	63	157. 5
		0. 2/10P20	15/15	48	120
		0. 2S/10P20	10/15	26	65
		0. 5/10P20	15/15	48	120
	500	0. 2/10P10	10/30, 15/20	63	157. 5
		0. 5/10P10	20/30, 15/20	63	157. 5
		0. 2/10P15	15/15, 10/20	63	157. 5
		0. 5/10P15	15/20, 20/20	63	157. 5
		0. 2/10P20	15/15	63	157. 5
		0. 5/10P20	15/15	63	157. 5
		10P10/10P10	15/15	45	112. 5
		10P10/10P15	15/15	45	112. 5
		0. 2/0. 5/10P10	10/10/15	45	112. 5
		0. 2S/0. 5/10P20	10/10/15	45	112. 5
		0. 5/10P10/10P10	10/10/10	45	112. 5
	600	0. 2/10P10	10/30, 15/20	80, 45	200, 112. 5
		0. 5/10P10	20/30, 15/20	80	200
		0. 2/10P15	15/15, 10/20	80	200
		0. 5/10P15	20/20	80	200
		0. 2/10P20	15/15	80	200
		0. 5/10P20	15/15	80	200
		5P20/5P20	10/10	45	112. 5
		0. 2/10P20/10P20	10/10/10	45	112. 5
		0. 5/5P20/5P20	10/10/10	45	112. 5

型号 Type	额定一次电流 Rated primary current (A)	准确级组合 Accuracy classes combination	额定输出 Rated output (VA)	额定短时热电流 Rated short-time thermal current (kA/1s)	额定动稳定电流 Rated dynamic current (kA)
LZZBJ9-10GA	750	0.2/10P10	10/30, 15/20	80, 45	200, 112.5
		0.5/10P10	20/30, 15/20	80	200
		0.2/10P15	15/15, 10/20	80	200
		0.5/10P15	20/20	80	200
		0.2/10P20	15/15	80	200
		0.5/10P20	15/15	80	200
		0.5/10P10/10P10	10/15/15	45	112.5
	800	0.2/10P10	20/20, 15/30	80	200
		0.5/10P10	20/20, 30/30	80	200
		0.2/10P15	20/15, 15/20	80	200
		0.5/10P15	20/15, 30/20	80	200
		0.2/10P20	15/20	80	200
		0.5/10P20	15/20	80	200
		0.5/10P10/10P10	15/15/15	50	125
	1000	0.2/10P10	20/20, 15/30	80	200
		0.5/10P10	20/20, 30/30	80	200
		0.2/10P15	20/15, 15/20	80	200
		0.5/10P15	20/15, 30/20	80	200
		0.2/10P20	15/20	80	200
		0.5/10P20	15/20	80	200
		10P10/10P15	15/15	50	125
		0.5/10P10/10P10	15/15/15	50	125
	1200, 1250	0.2/10P10	20/20, 15/30	100	250
		0.5/10P10	20/20, 15/20	100	250
		0.2/10P15	20/15, 15/20	100	250
		0.5/10P15	20/15, 30/20	100	250
		0.2/10P20	15/20	100	250
		0.5/10P20	15/20	100	250
		0.5/10P10/10P10	15/10/10	63	157.5

外形尺寸图

Overall dimensions

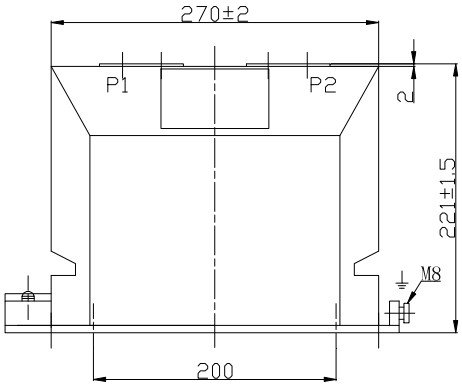

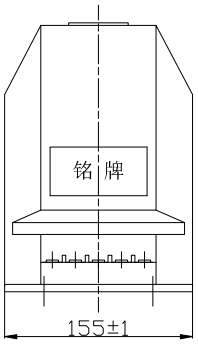

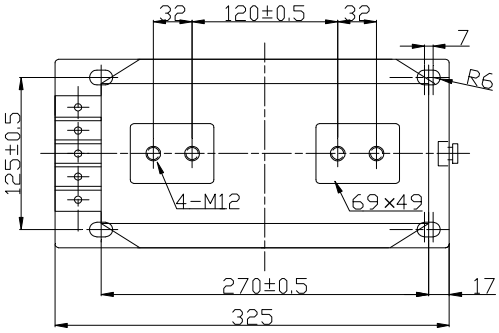

净重（Weight）：22-26kg

LZZBJ9-12/135b/4t 电流互感器

额定一次电流 Rated primary current (A)	准确级组合 Accuracy classes combination	额定输出 Rated output (VA)	额定短时热电流 Rated short-time thermal current (kA/1s)	额定动稳定电流 Rated dynamic current (kA)
50	0.5	10, 15, 20, 30	6	15
	0.2S	10, 15, 20, 30		
	0.2S/0.5	10/15, 15/15, 20/20		
	0.5/5P10	15/15		
	0.2S/0.5/5P10	10/10/10		
75	0.5	10, 15, 20, 30	7	18
	0.2S	10, 15, 20, 30		
	0.2S/0.5	10/15, 15/15, 20/20		
	0.5/5P10	15/15		
	0.2S/0.5/5P10	10/10/10		
100	0.5	10, 15, 20, 30	10	25
	0.2S	10, 15, 20, 30		
	0.2S/0.5	10/15, 15/15, 20/20		
	0.5/5P10	30/30		
	0.2S/0.5/5P10	15/15/15，15/15/20		
200	0.5	10, 15, 20, 30	20	50
	0.2S	10, 15, 20, 30		
	0.2S/0.5	10/15, 15/15, 20/20		
	0.5/5P10	30/30		
	0.2S/0.5/5P10	15/15/15，15/15/20		
300	0.5	10, 15, 20, 30	25	62.5
	0.2S	10, 15, 20, 30		
	0.2S/0.5	10/15, 15/15, 20/20		
	0.5/5P10	25/25		
	0.2S/0.5/5P10	10/10/15		
400	0.5	10, 15, 20, 30	40	100
	0.2S	10, 15, 20, 30		
	0.2S/0.5	10/15, 15/15, 20/20		
	0.5/5P10	30/30		
	0.2S/0.5/5P10	15/15/15，15/15/20		

外形尺寸图 Overall dimensions

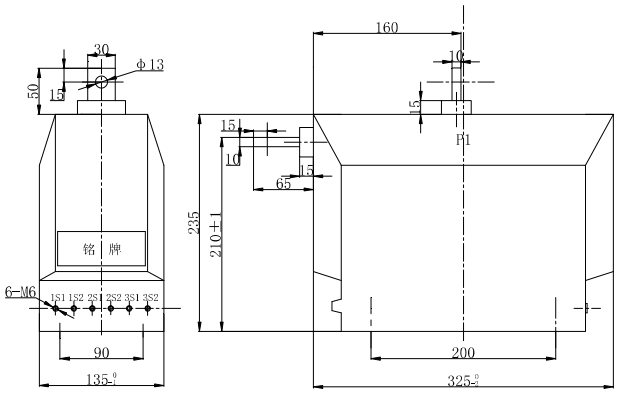

LZZBJ9-12/135b/4t

净重（Weight）：22.5kg

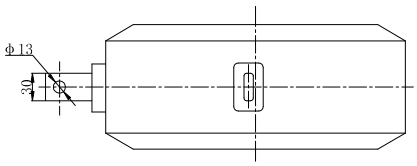

LZZBJ9-12/150b/1 电流互感器

额定一次电流 Rated primary current (A)	准确级组合 Accuracy classes combination	额定输出 Rated output (VA)	额定短时热电流 Rated short-time thermal current (kA/1s)	额定动稳定电流 Rated dynamic current (kA)
20-300	0.2	20	80I1n	200I1n
	0.5	20		
	0.5S	20		
	0.2S	20		
	0.2/0.2	15/15		
	0.2/0.5	15/15		
400-600	0.2	20	45	112.5
	0.5	20		
	0.5S	20		
	0.2S	20		
	0.2/0.2	15/15		
	0.2/0.5	15/15		
800-1000	0.2	20	63	160
	0.5	20		
	0.5S	20		
	0.2S	20		
	0.2/0.2	20/20		
	0.2/0.5	20/20		

外形尺寸图 Overall dimensions

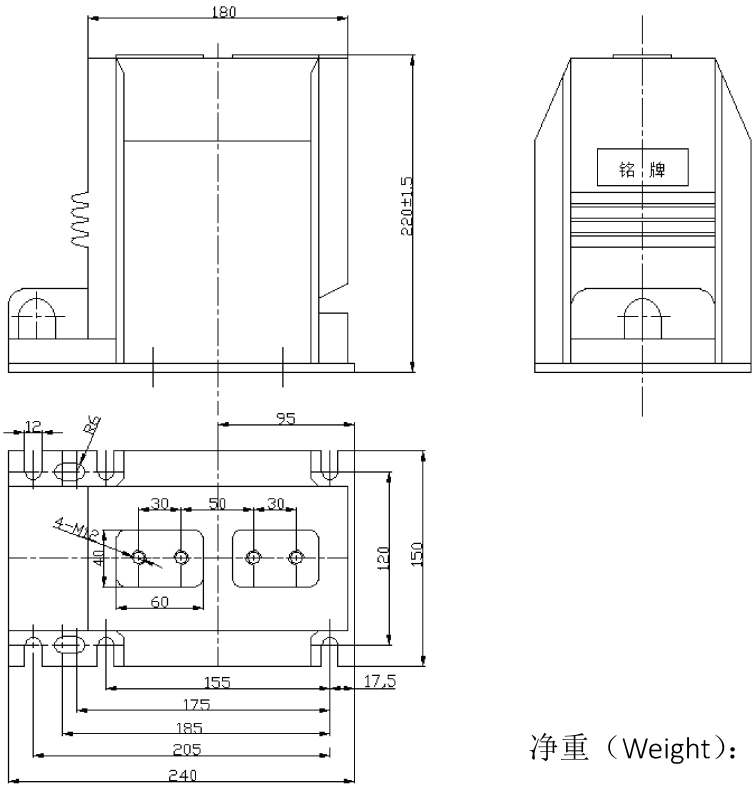

净重（Weight）：12.5kg

LZZBJ9-12/150b/2, LZZBJ10-10Q 电流互感器

型号 Type	额定一次电流 Rated primary current (A)	准确级组合 Accuracy classes combination	额定输出 Rated output (VA)	额定短时热电流 Rated short-time thermal current (kA/1s)	额定动稳定电流 Rated dynamic current (kA)
LZZBJ9-12/150b/2 LZZBJ10-10Q	20	0.2	10, 15, 20	6	15
		0.5	10, 15, 20	6	15
		0.2S	10, 15, 20	6	15
		0.2/10P10	10/5	6	15
	25	0.2	10, 15	10	25
		0.5	10, 15	10	25
		0.2S	10, 15	10	25
		0.2/0.5	10/15	7	18
	30	0.2	10, 15, 20	10	25
		0.5	10, 15, 20	10	25
		0.2S	10, 15, 20	10	25
		0.2/0.2	10/10	10	25
		0.2S/0.5	10/10	10	25
		0.2/10P10	10/10	10	25
		0.5/10P10	10/10	10	25
		0.5/10P15	5/5	10	25
	40	0.2	10, 15, 20	10	25
		0.5	10, 15, 20	10	25
		0.2S	10, 15, 20	10	25
		0.2/0.2	10/10	10	25
		0.2S/0.5	10/10	10	25
		0.2/10P10	10/15, 15/15	10	25
		0.5/10P10	15/15	10	25
	50	0.2	10, 15, 20	20	50
		0.5	10, 15, 20	20	50
		0.2S	10, 15, 20	20	50
		0.2/0.2	10/10	18	45
		0.2S/0.2	10/10	18	45
		0.2/0.5	10/15	15	38
		0.2S/0.5	10/15	15	38
		0.5S/0.5	10/10	18	45
		0.2/10P10	10/15, 15/15	10	25
		0.2/10P15	10/10	10	25
		0.5/10P10	15/15	10	25
		0.5/10P15	10/10	10	25
		0.2/0.5/10P10	15/15/15	7	18
	60	0.2	10, 15	20	50
		0.5	10, 15	20	50
		0.2S	10, 15	20	50
		0.2/10P10	15/15	15	38
		0.5/10P10	15/15	15	38
	75	0.2	10, 15, 20	25	63
		0.5	10, 15, 20	25	63
		0.2S	10, 15, 20	25	63
		0.2/0.2	10/10, 15/15	25, 20	63, 50
		0.2/0.5	10/10, 15/15	25, 20	63, 50
		0.2S/0.2	15/15	20	50
		0.2S/0.5	10/10	25	63
		0.2/10P10	10/10, 15/15	20	50
		0.5/10P10	15/15	20	50

型号 Type	额定一次电流 Rated primary current (A)	准确级组合 Accuracy classes combination	额定输出 Rated output (VA)	额定短时热电流 Rated short-time thermal current (kA/1s)	额定动稳定电流 Rated dynamic current (kA)
LZZBJ9-12/150b/2 LZZBJ10-10Q	75	0.5/10P15	15/15	10	25
	100	0.2	10, 15, 20	31.5	80
		0.5	10, 15, 20	31.5	80
		0.2S	10, 15, 20	31.5	80
		0.2/0.2	10/10, 15/15	31.5, 25	80, 63
		0.2/0.5	10/10, 10/15	31.5, 25	80, 63
		0.2S/0.2	15/15	25	63
		0.2S/0.5	10/15	25	63
		0.5/0.5	10/10, 15/15	31.5, 25	80, 63
		0.2/10P10	10/15, 15/15, 15/20	20	50
		0.2/10P15	10/15	15	38
		0.2S/10P10	10/15, 15/15	20	50
		0.5/10P10	15/15, 15/20	20	50
	125	0.2	10, 15	31.5	80
		0.2S	10, 15	31.5	80
		0.5/10P10	15/15	40	100
	150	0.2	10, 15, 20	40	100
		0.5	10, 15, 20	40	100
		0.2S	10, 15, 20	40	100
		0.2/0.2	10/10, 15/15	40, 31.5	100, 80
		0.2/0.5	10/15, 15/15	31.5	80
		0.2S/0.2	15/15	31.5	80
		0.2S/0.5	10/10	40	100
		0.2/10P10	10/15, 15/15	25	63
		0.2/10P15	15/15	20	50
		0.2/10P20	10/15, 15/15	20	50
		0.5/10P10	15/15, 15/20	25	63
		0.5/10P15	15/15	20	50
		0.2/0.5/5P10	10/15/15	20	50
	200	0.2	10, 15, 20	40	100
		0.5	10, 15, 20	40	100
		0.2S	10, 15, 20	40	100
		0.2/0.2	10/10	40	100
		0.2/0.5	15/15	40	100
		0.2S/0.5	10/15	40	100
		0.2/10P10	10/15, 15/15	31.5	80
		0.2/10P15	10/15	25	63
		0.2S/10P10	15/15	31.5	80
		0.2S/10P15	15/15	25	63
		0.5/10P10	15/15, 15/20, 15/30	31.5, 31.5, 20	80, 80, 50
		0.5/10P15	15/15	30	75
		0.2/0.5/5P10	10/15/15	20	50
	250	0.2	10, 15	50	125
		0.5	10, 15	50	125
		0.2S	10, 15	50	125
		0.2S/0.2	15/15	40	100
		0.2/10P10	15/15	40	100
		0.5/10P10	15/15	40	100
	300	0.2/0.2	10/10	50	125
		0.2S/0.2	10/10	50	125
		0.2/0.5	10/15, 15/15	50	125

型号 Type	额定一次电流 Rated primary current (A)	准确级组合 Accuracy classes combination	额定输出 Rated output (VA)	额定短时热电流 Rated short-time thermal current (kA/1s)	额定动稳定电流 Rated dynamic current (kA)
LZZBJ9-12/150b/2 LZZBJ10-10Q	300	0.5/0.5	15/15	50	125
		0.2/10P10	10/15, 15/15	50	125
	300	0.2/10P15	10/15	40	100
		0.2/5P20	10/15	30	75
		0.2S/10P10	15/15	50	125
		0.5/10P10	10/15, 15/15	50	125
		0.5/10P15	15/15	40	100
		0.5/5P20	15/15	30	75
		5P10/5P10	15/15	40	100
		0.5S/5P10	15/15	40	100
		0.5/0.5/10P10	15/15/15	31.5	80
	400	0.2/0.2	15/15	50	125
		0.2S/0.2	10/15	50	125
		0.2/0.5	10/15, 15/15	50	125
		0.5/0.5	15/15	50	125
		0.2/10P10	10/15, 15/15	50	125
		0.2/10P20	10/10	50	125
		0.5/5P10	10/15, 15/15	50	125
		0.5/10P15	15/15	50	125
		0.5S/5P10	15/15	50	125
		0.2/0.5/5P10	15/15/20	31.5	80
	500	0.2/0.2	15/15	63	160
		0.2/0.5	10/15, 15/15	63	160
		0.2S/0.5	15/15	63	160
		0.2/5P10	15/15	63	160
		0.5/5P10	15/15	63	160
		0.5/10P15	15/15	63	160
		0.2/0.5/0.5	15/15/15	63	160
	600	0.2/0.2	10/10, 15/15, 15/30	80	200
		0.2/0.5	10/15	80	200
		0.2S/0.2S	15/30	80	200
		0.2S/0.5	15/15	80	200
		0.2/5P10	10/15, 15/15	80	200
		0.2/5P20	15/15	80	200
		0.5/5P10	10/15, 15/15	80	200
		0.5/5P15	15/15	80	200
		0.5/5P20	15/15	80	200
		0.5S/5P10	15/15	80	200
		0.5S/10P15	15/15	80	200
		0.2/0.5/10P10	10/15/15, 10/15/20, 15/15/20	80	200
	630	0.5/5P10	15/15	80	200
	750	0.2/5P10	15/15	80	200
		0.5/5P10	10/10, 15/15	80	200
		0.5/5P10/0.5	10/10/25	80	200
	800	0.2/0.2	15/15	80	200
		0.2/5P10	15/15, 15/20	80	200
		0.5/5P10	15/15	80	200
		0.5/10P15	15/15	80	200

型号 Type	额定一次电流 Rated primary current (A)	准确级组合 Accuracy classes combination	额定输出 Rated output (VA)	额定短时热电流 Rated short-time thermal current (kA/1s)	额定动稳定电流 Rated dynamic current (kA)
LZZBJ9-12/150b/2 LZZBJ10-10Q	800	0.5/5P20	15/15	80	200
		0.5/0.5/5P10	15/15/15	80	200
	1000	0.2/0.2	15/15	80	200
		0.2/0.5	15/15	80	200
		0.2/5P10	15/15	80	200
		0.2/5P20	15/15	80	200
		0.5/5P10	15/15, 30/30	80	200
		0.5/5P15	10/10	80	200
		0.5/5P20	15/15	80	200
		0.5/5P10/5P10	15/15/15	80	200
	1200	0.2/5P10	15/15	100	250
		0.5/5P10	15/15	100	250
		0.5/5P10/5P10	15/15/15	100	250
	1250	0.5/5P10	5/5, 15/15	100	250
		0.5/10P10	15/20	100	250

外形尺寸图
Overall dimensions

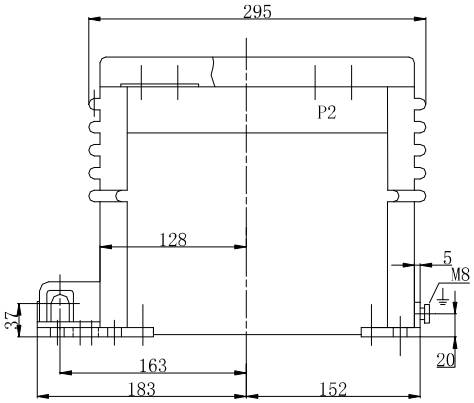

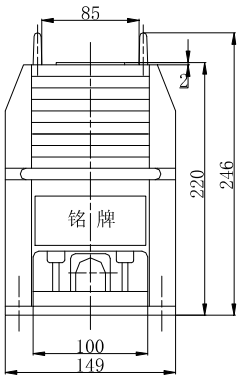

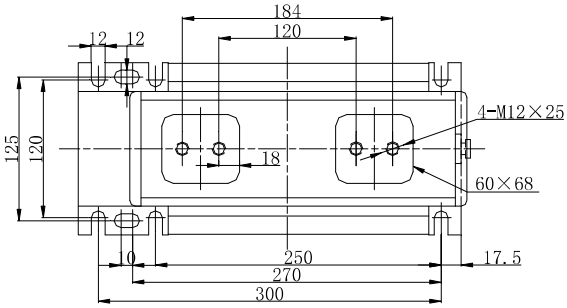

LZZBJ9-12/150b/2
LZZBJ10-10Q
净重（Weight）：20-24kg

LZZBJ9-12/150b/2SH 电流互感器

型号 Type	额定一次电流 Rated primary current (A)	准确级组合 Accuracy classes combination	额定输出 Rated output (VA)	额定短时热电流 Rated short-time thermal current (kA/1s)	额定动稳定电流 Rated dynamic current (kA)
AS12/150b/2SH	20	0.2	10, 15, 20	6	15
		0.5	10, 15, 20	6	15
		0.2S	10, 15, 20	6	15
		0.2/10P10	10/5	6	15
	25	0.2	10, 15	10	25
		0.5	10, 15	10	25
		0.2S	10, 15	10	25
		0.2/0.5	10/15	7	18
	30	0.2	10, 15, 20	10	25
		0.5	10, 15, 20	10	25
		0.2S	10, 15, 20	10	25
		0.2/0.2	10/10	10	25
		0.2S/0.5	10/10	10	25
		0.2/10P10	10/10	10	25
		0.5/10P10	10/10	10	25
		0.5/10P15	5/5	10	25
	40	0.2	10, 15, 20	10	25
		0.5	10, 15, 20	10	25
		0.2S	10, 15, 20	10	25
		0.2/0.2	10/10	10	25
		0.2S/0.5	10/10	10	25
		0.2/10P10	10/15, 15/15	10	25
		0.5/10P10	15/15	10	25
	50	0.2	10, 15, 20	20	50
		0.5	10, 15, 20	20	50
		0.2S	10, 15, 20	20	50
		0.2/0.2	10/10	18	45
		0.2S/0.2	10/10	18	45
		0.2/0.5	10/15	15	38
		0.2S/0.5	10/15	15	38
		0.5S/0.5	10/10	18	38
		0.2/10P10	10/15, 15/15	10	25
		0.2/10P15	10/10	10	25
		0.5/10P10	15/15	10	25
		0.5/10P15	10/10	10	25
		0.2/0.5/10P10	15/15/15	7	18
	60	0.2	10, 15	20	50
		0.5	10, 15	20	50
		0.2S	10, 15	20	50
		0.2/10P10	15/15	15	38
		0.5/10P10	15/15	15	38
	75	0.2	10, 15, 20	25	63
		0.5	10, 15, 20	25	63
		0.2S	10, 15, 20	25	63
		0.2/0.2	10/10, 15/15	25, 20	63, 50
		0.2/0.5	10/10, 15/15	25, 20	63, 50
		0.2S/0.2	15/15	20	50
		0.2S/0.5	10/10	25	63
		0.2/10P10	10/10, 15/15	20	50
		0.5/10P10	15/15	20	50

型号 Type	额定一次电流 Rated primary current (A)	准确级组合 Accuracy classes combination	额定输出 Rated output (VA)	额定短时热电流 Rated short-time thermal current (kA/1s)	额定动稳定电流 Rated dynamic current (kA)
AS12/150b/2SH	75	0.5/10P15	15/15	10	25
	100	0.2	10, 15, 20	31.5	80
		0.5	10, 15, 20	31.5	80
		0.2S	10, 15, 20	31.5	80
		0.2/0.2	10/10, 15/15	31.5, 25	80, 63
		0.2/0.5	10/10, 10/15	31.5, 25	80, 63
		0.2S/0.2	15/15	25	63
		0.2S/0.5	10/15	25	63
		0.5/0.5	10/10, 15/15	31.5, 25	80, 63
		0.2/10P10	10/15, 15/15, 15/20	20	50
		0.2/10P15	10/15	15	38
		0.2S/10P10	10/15, 15/15	20	50
		0.5/10P10	15/15, 15/20	20	50
	125	0.2	10, 15	31.5	80
		0.2S	10, 15	31.5	80
		0.5/10P10	15/15	40	100
	150	0.2	10, 15, 20	40	100
		0.5	10, 15, 20	40	100
		0.2S	10, 15, 20	40	100
		0.2/0.2	10/10, 15/15	40, 31.5	100, 80
		0.2/0.5	10/15, 15/15	31.5	80
		0.2S/0.2	15/15	31.5	80
		0.2S/0.5	10/10	40	100
		0.2/10P10	10/15, 15/15	25	63
		0.2/10P15	15/15	20	50
		0.2/10P20	10/15, 15/15	20	50
		0.5/10P10	15/15, 15/20	25	63
		0.5/10P15	15/15	20	50
		0.2/0.5/5P10	10/15/15	20	50
	200	0.2	10, 15, 20	40	100
		0.5	10, 15, 20	40	100
		0.2S	10, 15, 20	40	100
		0.2/0.2	10/10	40	100
		0.2/0.5	15/15	40	100
		0.2S/0.5	10/15	40	100
		0.2/10P10	10/15, 15/15	31.5	80
		0.2/10P15	10/15	25	63
		0.2S/10P10	15/15	31.5	80
		0.2S/10P15	15/15	25	63
		0.5/10P10	15/15, 15/20, 15/30	31.5, 31.5, 20	80, 80, 50
		0.5/10P15	15/15	30	75
		0.2/0.5/5P10	10/15/15	20	50
	250	0.2	10, 15	50	125
		0.5	10, 15	50	125
		0.2S	10, 15	50	125
		0.2S/0.2	15/15	40	100
		0.2/10P10	15/15	40	100
		0.5/10P10	15/15	40	100
	300	0.2/0.2	10/10	50	125
		0.2S/0.2	10/10	50	125
		0.2/0.5	10/15, 15/15	50	125
		0.5/0.5	15/15	50	125

型号 Type	额定一次电流 Rated primary current (A)	准确级组合 Accuracy classes combination	额定输出 Rated output (VA)	额定短时热电流 Rated short-time thermal current (kA/1s)	额定动稳定电流 Rated dynamic current (kA)
AS12/150b/2SH	300	0.2/10P10	10/15, 15/15	50	125
		0.2/10P15	10/15	40	100
		0.2/5P20	10/15	30	75
		0.2S/10P10	15/15	50	125
		0.5/10P10	10/15, 15/15	50	125
		0.5/10P15	15/15	40	100
		0.5/5P20	15/15	30	75
		5P10/5P10	15/15	40	100
		0.5S/5P10	15/15	40	100
		0.5/0.5/10P10	15/15/15	31.5	80
	400	0.2/0.2	15/15	50	125
		0.2S/0.2	10/15	50	125
		0.2/0.5	10/15, 15/15	50	125
		0.5/0.5	15/15	50	125
		0.2/10P10	10/15, 15/15	50	125
		0.2/10P20	10/10	50	125
		0.5/5P10	10/15, 15/15	50	125
		0.5/10P15	15/15	50	125
		0.5S/5P10	15/15	50	125
		0.2/0.5/5P10	15/15/20	31.5	80
	500	0.2/0.2	15/15	63	160
		0.2/0.5	10/15, 15/15	63	160
		0.2S/0.5	15/15	63	160
		0.2/5P10	15/15	63	160
		0.5/5P10	15/15	63	160
		0.5/10P15	15/15	63	160
		0.2/0.5/0.5	15/15/15	63	160
	600	0.2/0.2	10/10, 15/15, 15/30	80	200
		0.2/0.5	10/15	80	200
		0.2S/0.2S	15/30	80	200
		0.2S/0.5	15/15	80	200
		0.2/5P10	10/15, 15/15	80	200
		0.2/5P20	15/15	80	200
		0.5/5P10	10/15, 15/15	80	200
		0.5/5P15	15/15	80	200
		0.5/5P20	15/15	80	200
		0.5S/5P10	15/15	80	200
		0.5S/10P15	15/15	80	200
		0.2/0.5/10P10	10/15/15, 10/15/20, 15/15/20	80	200
	630	0.5/5P10	15/15	80	200
	750	0.2/5P10	15/15	80	200
		0.5/5P10	10/10, 15/15	80	200
		0.5/5P10/0.5	10/10/25	80	200
	800	0.2/0.2	15/15	80	200
		0.2/5P10	15/15, 15/20	80	200
		0.5/5P10	15/15	80	200
		0.5/10P15	15/15	80	200
		0.5/5P20	15/15	80	200
		0.5/0.5/5P10	15/15/15	80	200
	1000	0.2/0.2	15/15	80	200
		0.2/0.5	15/15	80	200

型号 Type	额定一次电流 Rated primary current (A)	准确级组合 Accuracy classes combination	额定输出 Rated output (VA)	额定短时热电流 Rated short-time thermal current (kA/1s)	额定动稳定电流 Rated dynamic current (kA)
AS12/150b/2SH	1000	0. 2/5P10	15/15	80	200
		0. 2/5P20	15/15	80	200
		0. 5/5P10	15/15, 30/30	80	200
		0. 5/5P15	10/10	80	200
		0. 5/5P20	15/15	80	200
		0. 5/5P10/5P10	15/15/15	80	200
	1200	0. 2/5P10	15/15	100	250
		0. 5/5P10	15/15	100	250
		0. 5/5P10/5P10	15/15/15	100	250
	1250	0. 5/5P10	5/5, 15/15	100	250
		0. 5/10P10	15/20	100	250

外形尺寸图 Overall dimensions

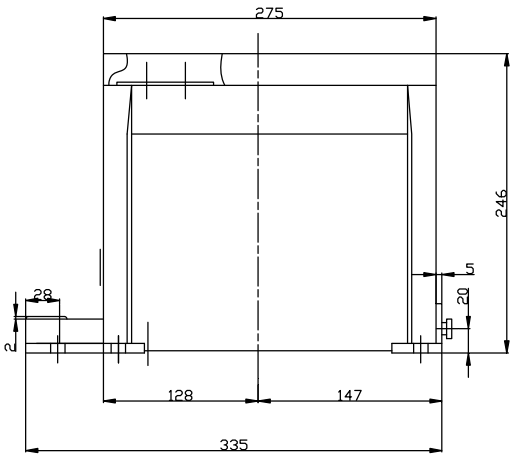

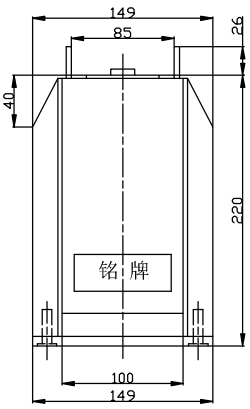

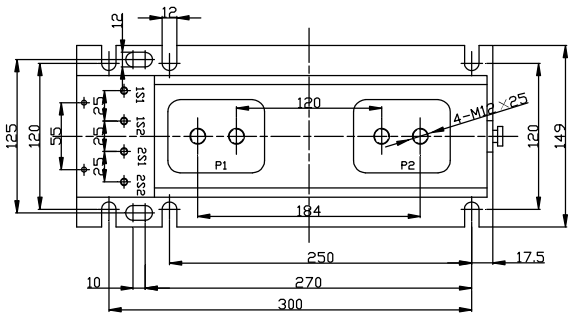

净重（Weight）：20-24kg

LZZBJ9-12/150b/4F 电流互感器

型号 Type	额定一次电流 Rated primary current (A)	准确级组合 Accuracy classes combination	额定输出 Rated output (VA)	额定短时热电流 Rated short-time thermal current (kA/1s)	额定动稳定电流 Rated dynamic current (kA)
LZZBJ9-12/150b/4F	20	0.2	10, 15, 20	6	15
		0.5	10, 15, 20	6	15
		0.2S	10, 15, 20	6	15
		0.2/10P10	15/15	6	15
	25	0.2	10, 15	10	25
		0.5	10, 15	10	25
		0.2S	10, 15	10	25
		0.2/0.5	10/15	7	18
		0.2/5P10, 0.5/5P10	10/15, 15/15	10	25
	30	0.2	10, 15, 20	10	25
		0.5	10, 15, 20	10	25
		0.2S	10, 15, 20	10	25
		0.2/0.2	10/10, 15/15	10	25
		0.2S/0.5	10/10, 15/15	10	25
		0.2/10P10	10/10, 10/15, 15/15	10	25
		0.5/10P10	10/10, 10/15, 15/15, 20/20	10	25
		0.5/10P15	10/10, 15/15	10	25
	40	0.2	10, 15, 20	10	25
		0.5	10, 15, 20	10	25
		0.2S	10, 15, 20	10	25
		0.2/0.2	10/10, 15/15	10	25
		0.2S/0.5	10/10, 15/15	10	25
		0.2/10P10, 0.5/10P10	10/15, 15/15, 20/20	10	25
		0.5/10P15	10/10, 15/15	10	25
	50	0.2	10, 15, 20, 30	20	50
		0.5	10, 15, 20, 30	20	50
		0.2S	10, 15, 20, 30	20	50
		0.2/0.2, 0.2S/0.2	10/10, 15/15, 20/20	20	50
		0.2/0.5, 0.2S/0.5	10/15, 15/15, 20/20	20	50
		0.2/10P10, 0.5/10P10	10/15, 15/15, 15/20	20	50
		0.2/10P15, 0.5/10P15	10/10, 15/15	10	25
		0.2/10P20, 0.5/10P20	10/10, 15/15	10	25
		0.2/0.5/10P10	15/15/15	15	38
	60	0.2	10, 15	20	50
		0.5	10, 15	20	50
		0.2S	10, 15	20	50
		0.2/10P10	15/15	15	38
		0.5/10P10	15/15	15	38
	75	0.2	10, 15, 20, 30	25	63
		0.5	10, 15, 20, 30	25	63
		0.2S	10, 15, 20, 30	25	63
		0.2/0.2, 0.2S/0.2	10/10, 15/15, 20/20	25	63
		0.2/0.5, 0.2S/0.5	10/15, 15/15, 20/20	25	63
		0.2/10P10, 0.5/10P10	10/15, 15/15, 15/20	25	63
		0.2/10P15, 0.5/10P15	10/10, 15/15	20	50
		0.2/10P20, 0.5/10P20	10/10, 15/15	12	38

型号 Type	额定一次电流 Rated primary current (A)	准确级组合 Accuracy classes combination	额定输出 Rated output (VA)	额定短时热电流 Rated short-time thermal current (kA/1s)	额定动稳定电流 Rated dynamic current (kA)
LZZBJ9-12/150b/4F	75	0.5/10P20	20/20	10	25
		0.2/0.5/10P10	15/15/15	20	50
		0.2/0.5/10P20	15/15/15	10	25
	100	0.2	10, 15, 20, 30	31.5	80
		0.5	10, 15, 20, 30	31.5	80
		0.2S	10, 15, 20, 30	31.5	80
		0.2/0.2, 0.2S/0.2	10/10, 15/15, 20/20	31.5	80
		0.2/0.5, 0.2S/0.5	10/15, 15/15, 20/20	31.5	80
		0.2/10P10, 0.5/10P10	10/15, 15/15, 15/20	31.5	80
		0.2/10P15, 0.5/10P15	10/10, 15/15	25	63
		0.2/10P20, 0.5/10P20	10/10, 15/15	20	50
		0.2/0.5/10P10	15/15/15	25	63
		0.5/10P20	20/20	20	50
		0.2/0.5/10P20	15/15/15	20	50
	125	0.2, 0.2S, 0.5	10, 15	40	100
		0.2/10P10, 0.5/10P10	15/15	40	100
		0.2/10P20, 0.5/10P20	15/15	25	63
	150	0.2	10, 15, 20, 30	40	100
		0.5	10, 15, 20, 30	40	100
		0.2S	10, 15, 20, 30	40	100
		0.2/0.2, 0.2S/0.2	10/10, 15/15, 20/20	40	100
		0.2/0.5, 0.2S/0.5	10/15, 15/15, 20/20	40	100
		0.2/10P10, 0.5/10P10	10/15, 15/15, 15/20	40	100
		0.2/10P15, 0.5/10P15	10/10, 15/15	40	100
		0.2/10P20, 0.5/10P20	10/10, 15/15	25	63
		0.2/0.5/10P10	15/15/15	40	100
		0.5/10P20	20/20	25	63
		0.2/0.5/10P20	15/15/15	25	63
	200，250	0.2	10, 15, 20, 30	40	100
		0.5	10, 15, 20, 30	40	100
		0.2S	10, 15, 20, 30	40	100
		0.2/0.2, 0.2S/0.2	10/10, 15/15, 20/20	40	100
		0.2/0.5, 0.2S/0.5	10/15, 15/15, 20/20	40	100
		0.2/10P10, 0.5/10P10	10/15, 15/15, 15/20	40	100
		0.2/10P15, 0.5/10P15	10/10, 15/15	40	100
		0.2/10P20, 0.5/10P20	10/10, 15/15	40	100
		0.2/0.5/10P10	15/15/15	40	100
		0.5/10P20	20/20	31.5	80
		0.2/0.5/10P20	15/15/15	31.5	80
	300, 400	0.2	10, 15, 20, 30	50	125
		0.5	10, 15, 20, 30	50	125
		0.2S	10, 15, 20, 30	50	125
		0.2/0.2, 0.2S/0.2	10/10, 15/15, 20/20	50	125
		0.2/0.5, 0.2S/0.5	10/15, 15/15, 20/20	50	125
		0.2/10P10, 0.5/10P10	10/15, 15/15, 15/20	50	125
		0.2/10P15, 0.5/10P15	10/10, 15/15	50	125
		0.2/10P20, 0.5/10P20	10/10, 15/15	50	125
		0.2/0.5/10P10	15/15/15	50	125
		0.5/10P20	20/20	40	100
		0.2/0.5/10P20	15/15/15, 15/15/20	40	100

型号 Type	额定一次电流 Rated primary current (A)	准确级组合 Accuracy classes combination	额定输出 Rated output (VA)	额定短时热电流 Rated short-time thermal current (kA/1s)	额定动稳定电流 Rated dynamic current (kA)
LZZBJ9-12/150b/4F	300, 400	0.2/10P10/10P20	15/15/20	40	100
	500, 600, 630	0.2	10, 15, 20, 30	63	160
		0.5	10, 15, 20, 30	63	160
		0.2S	10, 15, 20, 30	63	160
		0.2/0.2, 0.2S/0.2	10/10, 15/15, 20/20	63	160
		0.2/0.5, 0.2S/0.5	10/15, 15/15, 20/20	63	160
		0.2/10P10, 0.5/10P10	10/15, 15/15, 15/20, 30/30	63	160
		0.2/10P15, 0.5/10P15	10/10, 15/15, 30/30	63	160
		0.2/10P20, 0.5/10P20	10/10, 15/15, 30/30	63	160
		0.2/0.5/10P10	15/15/15, 15/15/30	63	160
		0.2/0.5/10P20	15/15/15, 15/15/30	63	160
		0.2/10P10/10P20	15/15/15, 15/15/30	63	160
	750, 800	0.2	10, 15, 20, 30	63	160
		0.5	10, 15, 20, 30	63	160
		0.2S	10, 15, 20, 30	63	160
		0.2/0.2, 0.2S/0.2	10/10, 15/15, 20/20	63	160
		0.2/0.5, 0.2S/0.5	10/15, 15/15, 20/20	63	160
		0.2/10P10, 0.5/10P10	10/15, 15/15, 15/20, 30/30	63	160
		0.2/10P15, 0.5/10P15	10/10, 15/15, 30/30	63	160
		0.2/10P20, 0.5/10P20	10/10, 15/15, 30/30	63	160
		0.2/0.5/10P10	15/15/15, 15/15/30	63	160
		0.2/0.5/10P20	15/15/15, 15/15/30	63	160
		0.2/10P10/10P20	15/15/15, 15/15/30	63	160
	1000, 1200, 1250	0.2	10, 15, 20, 30	80	200
		0.5	10, 15, 20, 30	80	200
		0.2S	10, 15, 20, 30	80	200
		0.2/0.2, 0.2S/0.2	10/10, 15/15, 20/20	80	200
		0.2/0.5, 0.2S/0.5	10/15, 15/15, 20/20	80	200
		0.2/10P10, 0.5/10P10	10/15, 15/15, 15/20, 30/30	80	200
		0.2/10P15, 0.5/10P15	10/10, 15/15, 30/30	80	200
		0.2/10P20, 0.5/10P20	10/10, 15/15, 30/30	80	200
		0.2/0.5/10P10	15/15/15, 15/15/30	80	200
		0.2/0.5/10P20	15/15/15, 15/15/30	80	200
		0.2/10P10/10P20	15/15/15, 15/15/30	80	200

外形尺寸图
Overall dimensions

与 LZZBJ9-12/150b/4 的区别为一次端子后移

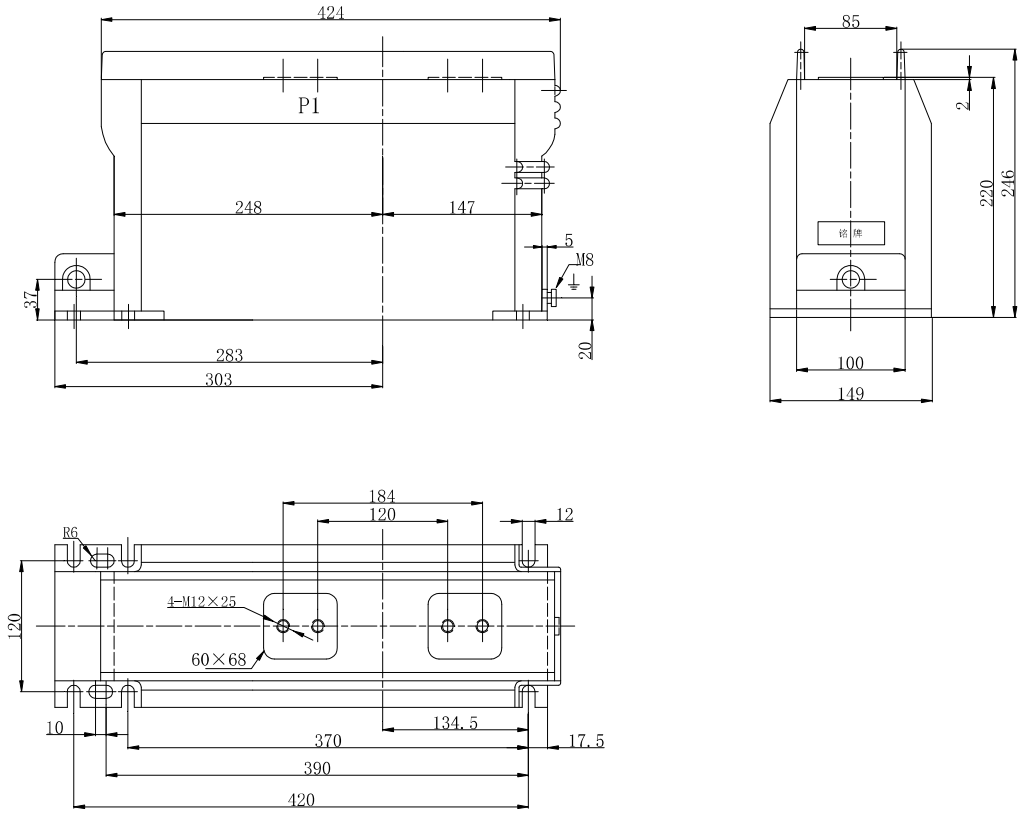

净重（Weight）：35-37kg

LZZBJ9-12/150b(s)/4, LZZBJ11-10Q 电流互感器

型号 Type	额定一次电流 Rated primary current (A)	准确级组合 Accuracy classes combination	额定输出 Rated output (VA)	额定短时热电流 Rated short-time thermal current (kA/1s)	额定动稳定电流 Rated dynamic current (kA)
LZZBJ9-12/150b（s）/4 LZZBJ11-10Q	20	0.2	10, 15, 20	6	15
		0.5	10, 15, 20	6	15
		0.2S	10, 15, 20	6	15
		0.2/10P10	15/15	6	15
	25	0.2	10, 15	10	25
		0.5	10, 15	10	25
		0.2S	10, 15	10	25
		0.2/0.5	10/15	7	18
		0.2/5P10, 0.5/5P10	10/15, 15/15	10	25
	30	0.2	10, 15, 20	10	25
		0.5	10, 15, 20	10	25
		0.2S	10, 15, 20	10	25
		0.2/0.2	10/10, 15/15	10	25
		0.2S/0.5	10/10, 15/15	10	25
		0.2/10P10	10/10, 10/15, 15/15	10	25
		0.5/10P10	10/10, 10/15, 15/15, 20/20	10	25
		0.5/10P15	10/10, 15/15	10	25
	40	0.2	10, 15, 20	10	25
		0.5	10, 15, 20	10	25
		0.2S	10, 15, 20	10	25
		0.2/0.2	10/10, 15/15	10	25
		0.2S/0.5	10/10, 15/15	10	25
		0.2/10P10, 0.5/10P10	10/15, 15/15, 20/20	10	25
		0.5/10P15	10/10, 15/15	10	25
	50	0.2	10, 15, 20, 30	20	50
		0.5	10, 15, 20, 30	20	50
		0.2S	10, 15, 20, 30	20	50
		0.2/0.2, 0.2S/0.2	10/10, 15/15, 20/20	20	50
		0.2/0.5, 0.2S/0.5	10/15, 15/15, 20/20	20	50
		0.2/10P10, 0.5/10P10	10/15, 15/15, 15/20	20	50
		0.2/10P15, 0.5/10P15	10/10, 15/15	10	25
		0.2/10P20, 0.5/10P20	10/10, 15/15	10	25
		0.2/0.5/10P10	15/15/15	15	38
	60	0.2	10, 15	20	50
		0.5	10, 15	20	50
		0.2S	10, 15	20	50
		0.2/10P10	15/15	15	38
		0.5/10P10	15/15	15	38
	75	0.2	10, 15, 20, 30	25	63
		0.5	10, 15, 20, 30	25	63
		0.2S	10, 15, 20, 30	25	63
		0.2/0.2, 0.2S/0.2	10/10, 15/15, 20/20	25	63
		0.2/0.5, 0.2S/0.5	10/15, 15/15, 20/20	25	63
		0.2/10P10, 0.5/10P10	10/15, 15/15, 15/20	25	63
		0.2/10P15, 0.5/10P15	10/10, 15/15	20	50
		0.2/10P20, 0.5/10P20	10/10, 15/15	12	38
		0.5/10P20	20/20	10	25
		0.2/0.5/10P10	15/15/15	20	50
		0.2/0.5/10P20	15/15/15	10	25

型号 Type	额定一次电流 Rated primary current (A)	准确级组合 Accuracy classes combination	额定输出 Rated output (VA)	额定短时热电流 Rated short-time thermal current (kA/1s)	额定动稳定电流 Rated dynamic current (kA)
LZZBJ9-12/150b（s）/4 LZZBJ11-10Q	100	0.2	10, 15, 20, 30	31.5	80
		0.5	10, 15, 20, 30	31.5	80
		0.2S	10, 15, 20, 30	31.5	80
		0.2/0.2, 0.2S/0.2	10/10, 15/15, 20/20	31.5	80
		0.2/0.5, 0.2S/0.5	10/15, 15/15, 20/20	31.5	80
		0.2/10P10, 0.5/10P10	10/15, 15/15, 15/20	31.5	80
		0.2/10P15, 0.5/10P15	10/10, 15/15	25	63
		0.2/10P20, 0.5/10P20	10/10, 15/15	20	50
		0.2/0.5/10P10	15/15/15	25	63
		0.5/10P20	20/20	20	50
		0.2/0.5/10P20	15/15/15	20	50
	125	0.2, 0.2S, 0.5	10, 15	40	100
		0.2/10P10, 0.5/10P10	15/15	40	100
		0.2/10P20, 0.5/10P20	15/15	25	63
	150	0.2	10, 15, 20, 30	40	100
		0.5	10, 15, 20, 30	40	100
		0.2S	10, 15, 20, 30	40	100
		0.2/0.2, 0.2S/0.2	10/10, 15/15, 20/20	40	100
		0.2/0.5, 0.2S/0.5	10/15, 15/15, 20/20	40	100
		0.2/10P10, 0.5/10P10	10/15, 15/15, 15/20	40	100
		0.2/10P15, 0.5/10P15	10/10, 15/15	40	100
		0.2/10P20, 0.5/10P20	10/10, 15/15	25	63
		0.2/0.5/10P10	15/15/15	40	100
		0.5/10P20	20/20	25	63
		0.2/0.5/10P20	15/15/15	25	63
	200，250	0.2	10, 15, 20, 30	40	100
		0.5	10, 15, 20, 30	40	100
		0.2S	10, 15, 20, 30	40	100
		0.2/0.2, 0.2S/0.2	10/10, 15/15, 20/20	40	100
		0.2/0.5, 0.2S/0.5	10/15, 15/15, 20/20	40	100
		0.2/10P10, 0.5/10P10	10/15, 15/15, 15/20	40	100
		0.2/10P15, 0.5/10P15	10/10, 15/15	40	100
		0.2/10P20, 0.5/10P20	10/10, 15/15	40	100
		0.2/0.5/10P10	15/15/15	40	100
		0.5/10P20	20/20	31.5	80
		0.2/0.5/10P20	15/15/15	31.5	80
	300, 400	0.2	10, 15, 20, 30	50	125
		0.5	10, 15, 20, 30	50	125
		0.2S	10, 15, 20, 30	50	125
		0.2/0.2, 0.2S/0.2	10/10, 15/15, 20/20	50	125
		0.2/0.5, 0.2S/0.5	10/15, 15/15, 20/20	50	125
		0.2/10P10, 0.5/10P10	10/15, 15/15, 15/20	50	125
		0.2/10P15, 0.5/10P15	10/10, 15/15	50	125
		0.2/10P20, 0.5/10P20	10/10, 15/15	50	125
		0.2/0.5/10P10	15/15/15	50	125
		0.5/10P20	20/20	40	100
		0.2/0.5/10P20	15/15/15, 15/15/20	40	100
		0.2/10P10/10P20	15/15/20	40	100
	500, 600, 630	0.2	10, 15, 20, 30	63	160
		0.5	10, 15, 20, 30	63	160
		0.2S	10, 15, 20, 30	63	160
		0.2/0.2, 0.2S/0.2	10/10, 15/15, 20/20	63	160

型号 Type	额定一次电流 Rated primary current (A)	准确级组合 Accuracy classes combination	额定输出 Rated output (VA)	额定短时热电流 Rated short-time thermal current (kA/1s)	额定动稳定电流 Rated dynamic current (kA)
LZZBJ9-12/150b（s）/4 LZZBJ11-10Q	500, 600, 630	0.2/0.5, 0.2S/0.5	10/15, 15/15, 20/20	63	160
		0.2/10P10, 0.5/10P10	10/15, 15/15, 15/20, 30/30	63	160
		0.2/10P15, 0.5/10P15	10/10, 15/15, 30/30	63	160
		0.2/10P20, 0.5/10P20	10/10, 15/15, 30/30	63	160
		0.2/0.5/10P10	15/15/15, 15/15/30	63	160
		0.2/0.5/10P20	15/15/15, 15/15/30	63	160
		0.2/10P10/10P20	15/15/15, 15/15/30	63	160
	750, 800	0.2	10, 15, 20, 30	63	160
		0.5	10, 15, 20, 30	63	160
		0.2S	10, 15, 20, 30	63	160
		0.2/0.2, 0.2S/0.2	10/10, 15/15, 20/20	63	160
		0.2/0.5, 0.2S/0.5	10/15, 15/15, 20/20	63	160
		0.2/10P10, 0.5/10P10	10/15, 15/15, 15/20, 30/30	63	160
		0.2/10P15, 0.5/10P15	10/10, 15/15, 30/30	63	160
		0.2/10P20, 0.5/10P20	10/10, 15/15, 30/30	63	160
		0.2/0.5/10P10	15/15/15, 15/15/30	63	160
		0.2/0.5/10P20	15/15/15, 15/15/30	63	160
		0.2/10P10/10P20	15/15/15, 15/15/30	63	160
	1000, 1200, 1250	0.2	10, 15, 20, 30	80	200
		0.5	10, 15, 20, 30	80	200
		0.2S	10, 15, 20, 30	80	200
		0.2/0.2, 0.2S/0.2	10/10, 15/15, 20/20	80	200
		0.2/0.5, 0.2S/0.5	10/15, 15/15, 20/20	80	200
		0.2/10P10, 0.5/10P10	10/15, 15/15, 15/20, 30/30	80	200
		0.2/10P15, 0.5/10P15	10/10, 15/15, 30/30	80	200
		0.2/10P20, 0.5/10P20	10/10, 15/15, 30/30	80	200
		0.2/0.5/10P10	15/15/15, 15/15/30	80	200
		0.2/0.5/10P20	15/15/15, 15/15/30	80	200
		0.2/10P10/10P20	15/15/15, 15/15/30	80	200

外形尺寸图
Overall dimensions

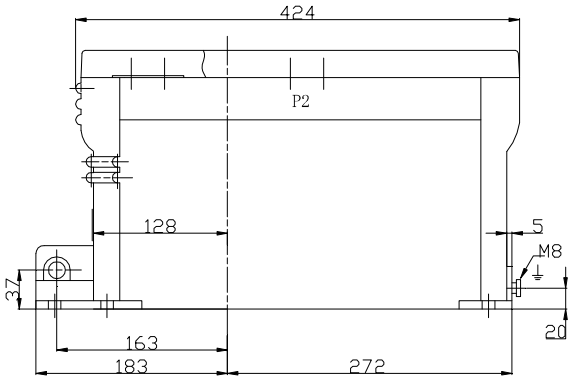

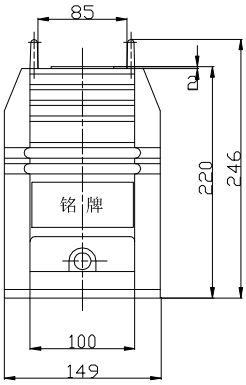

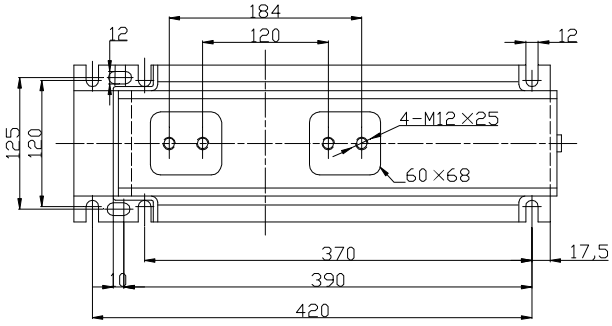

LZZBJ9-12/150b/4
LZZBJ11-10Q
净重（Weight）：35-37kg

二次多端子外形图

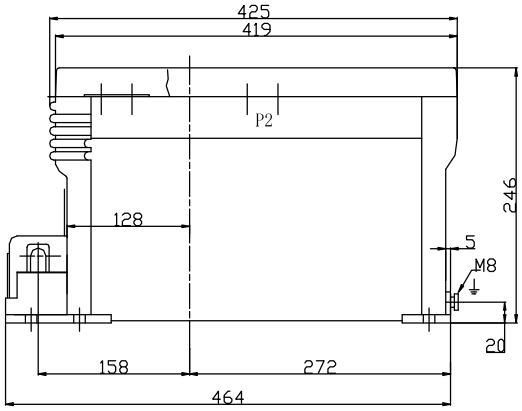

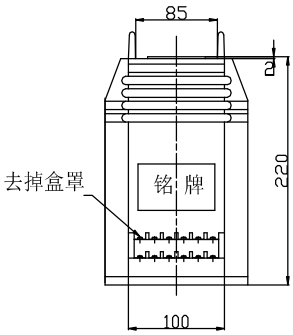

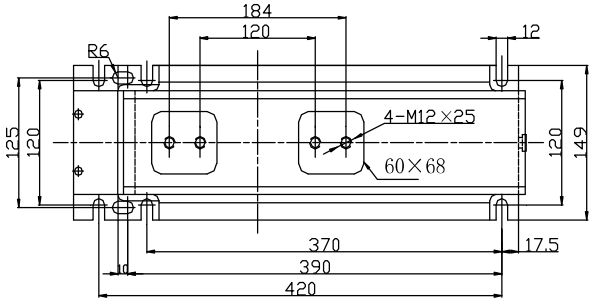

LZZBJ9-12/150s/4
LZZBJ11-10Q
净重(Weight)：35-37kg

LZZBJ9-12/175b/3G 电流互感器

型号 Type	额定一次电流 Rated primary current (A)	准确级组合 Accuracy classes combination	额定输出 Rated output (VA)	额定短时热电流 Rated short-time thermal current (kA/1s)	额定动稳定电流 Rated dynamic current (kA)
LZZBJ9-12/175b/3G	20-150	0.2/10P10	15/15, 10/20	200I1n	500I1n
		0.5/10P10	15/15, 10/20		
		0.2/10P15	15/15, 10/20	150I1n	375I1n
		0.5/10P15	20/20		
		0.2/10P20	10/15	120I1n	300I1n
		0.5/10P20	15/15		
	200	0.2/10P10	15/15, 10/20	45	112.5
		0.5/10P10	15/15, 10/20	45	112.5
		0.2/10P15	15/15, 10/20	45	112.5
		0.5/10P15	20/20	45	112.5
		0.2/10P20	15/15	30	75
		0.5/10P20	15/15	30	75
	250	0.2/10P10	15/15, 10/20	45	112.5
		0.5/10P10	15/15, 10/20	45	112.5
		0.2/10P15	15/15, 10/20	45	112.5
		0.5/10P15	20/20	45	112.5
		0.2/10P20	15/15	30	75
		0.5/10P20	15/15	30	75
	300	0.2/10P10	15/15, 10/30	63	157.5
		0.5/10P10	15/15, 20/30	63	157.5
		0.2/10P15	15/15, 10/20	45	112.5
		0.5/10P15	20/20	45	112.5
		0.2/10P20	15/15	45	112.5
		0.5/10P20	15/15	45	112.5
	400	0.2/10P10	15/20, 10/30	63	157.5
		0.5/10P10	20/30, 30/20	63	157.5
		0.2/10P15	15/15, 10/20	63	157.5
		0.5/10P15	20/20	63	157.5
		0.2/10P20	15/15	45	112.5
		0.5/10P20	15/15	45	112.5
	500	0.2/10P10	15/20, 10/30	63	157.5
		0.5/10P10	20/30, 30/20	63	157.5
		0.2/10P15	15/15, 10/20	63	157.5
		0.5/10P15	20/20	63	157.5
		0.2/10P20	15/15	45	112.5
		0.5/10P20	15/15	45	112.5

型号 Type	额定一次电流 Rated primary current (A)	准确级组合 Accuracy classes combination	额定输出 Rated output (VA)	额定短时热电流 Rated short-time thermal current (kA/1s)	额定动稳定电流 Rated dynamic current (kA)
LZZBJ9-12/175b/3G	600	0.2/10P10	15/20, 10/30	80	200
		0.5/10P10	20/30, 30/20	80	200
		0.2/10P15	15/15, 10/20	80	200
		0.5/10P15	20/20	80	200
		0.2/10P20	15/15	63	157.5
		0.5/10P20	15/15	63	157.5
	800	0.2/10P10	15/30, 20/20	80	200
		0.5/10P10	30/30	80	200
		0.2/10P15	15/20	80	200
		0.5/10P15	30/20	80	200
		0.2/10P20	15/20, 20/15	63	157.5
		0.5/10P20	20/20	63	157.5
	1000	0.2/10P10	15/30, 20/20	80	200
		0.5/10P10	30/30	80	200
		0.2/10P15	15/20	80	200
		0.5/10P15	30/20	80	200
		0.2/10P20	15/20, 20/15	63	157.5
		0.5/10P20	20/20	63	157.5
	1200-1500	0.2/10P10	15/30, 20/20	100	250
		0.5/10P10	30/30	100	250
		0.2/10P15	15/20, 20/15	100	250
		0.5/10P15	30/20	100	250
		0.2/10P20	15/20	80	200
		0.5/10P20	20/20	80	200
	1500-2500	0.2/10P10	30/30	100	250
		0.5/10P10	60/30	100	250
		0.2/10P15	30/30	100	250
		0.5/10P15	60/30	100	250
		0.2/10P20	15/20	100	250
		0.5/10P20	20/20	100	250
	3000-3150	0.2/10P10	30/30	100	250
		0.5/10P10	60/30	100	250
		0.2/10P15	30/30	100	250
		0.5/10P15	60/20	100	250
		0.2/10P20	20/15	100	250
		0.5/10P20	25/15	100	250
	3000-3150 (/1A)	0.2/10P15	30/15	100	250
		0.5/10P15	60/15	100	250
		0.2/10P20	20/15	100	250
		0.5/10P20	25/15	100	250

外形尺寸图 Overall dimensions

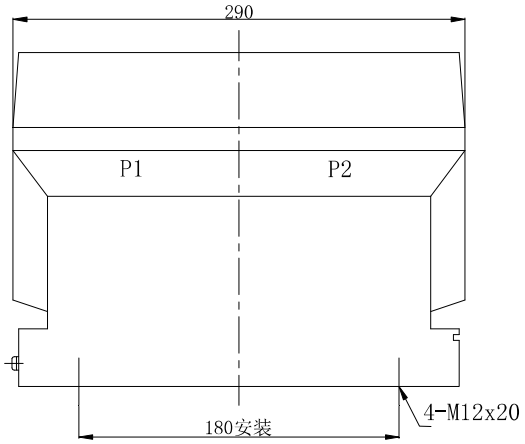

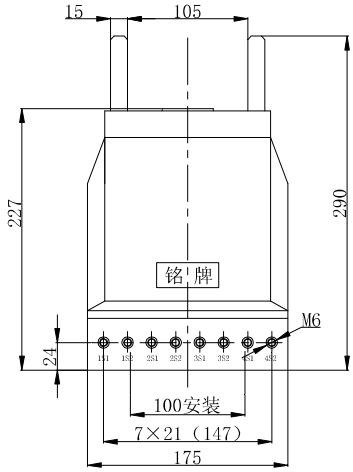

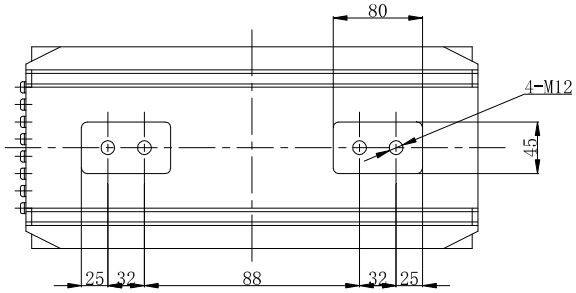

20-1000A

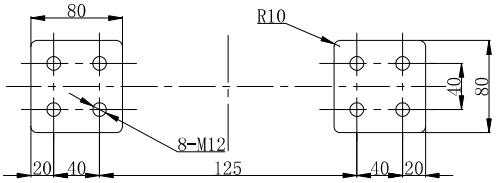

1200-2000A

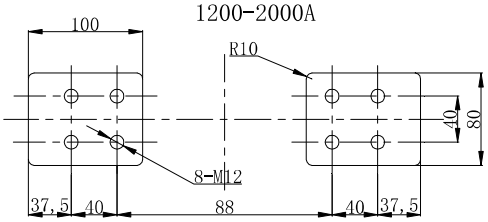

2500-3150A

净重（Weight）：27kg

LZZBJ9-12/175b/5G 电流互感器

型号 Type	额定一次电流 Rated primary current (A)	准确级组合 Accuracy classes combination	额定输出 Rated output (VA)	额定短时热电流 Rated short-time thermal current (kA/1s)	额定动稳定电流 Rated dynamic current (kA)
LZZBJ9-12/175b/5G	20, 30, 40, 50, 75, 100	0.2/0.2/5P10	10/10/40	150I1n	375I1n
		0.2/0.5/5P15	10/15/30		
		0.2/0.5/5P20	10/15/20		
		0.2/5P10/5P15	10/20/20		
		0.5/5P10/5P20	10/20/15		
	150, 200	0.2/0.2/5P10	10/10/40	31.5	80
		0.2/0.5/5P15	10/15/30		
		0.2/0.5/5P20	10/15/20		
		0.2/5P10/5P15	10/20/20		
		0.5/5P10/5P20	10/20/15		
	300, 400	0.2/0.2/5P10	10/10/40	45	112.5
		0.2/0.5/5P15	10/15/30		
		0.2/0.5/5P20	10/15/20		
		0.2/5P10/5P15	10/20/20		
		0.5/5P10/5P20	10/20/15		
	500	0.2/0.2/5P10	10/10/40	63	158
		0.2/0.5/5P15	10/15/30		
		0.2/0.5/5P20	10/15/20		
		0.2/5P10/5P15	10/20/20		
		0.5/5P10/5P20	10/20/15		
	600, 800	0.2/0.2/5P10	10/10/40	63	158
		0.2/0.5/5P15	10/20/40		
		0.2/0.5/5P20	10/20/30		
		0.2/5P10/5P15	10/20/30		
		0.5/5P10/5P20	10/20/20		
	1000, 1200, 1250	0.2/0.2/5P10	15/15/40	100	250
		0.2/0.5/5P15	15/30/30		
		0.2/0.5/5P20	10/30/20		
		0.2/5P10/5P15	15/30/30		
		0.5/5P10/5P20	30/30/20		
	1500	0.2/0.2/5P10	15/15/40	100	250
		0.2/0.5/5P15	15/30/40		
		0.2/0.5/5P20	15/30/30		
		0.2/5P10/5P15	15/30/30		
		0.5/5P10/5P20	30/30/20		
	2000	0.2/0.2/5P10	15/15/40	100	250
		0.2/0.5/5P15	15/30/40		

型号 Type	额定一次电流 Rated primary current (A)	准确级组合 Accuracy classes combination	额定输出 Rated output (VA)	额定短时热电流 Rated short-time thermal current (kA/1s)	额定动稳定电流 Rated dynamic current (kA)
LZZBJ9-12/175b/5G	2000	0.2/0.5/5P20	15/30/30	100	250
		0.2/5P10/5P15	15/30/30		
		0.5/5P10/5P20	30/30/20		
	2500	0.2/0.2/5P10	15/15/40	100	250
		0.2/0.5/5P15	15/30/40		
		0.2/0.5/5P20	15/30/30		
		0.2/5P10/5P15	15/30/30		
		0.5/5P10/5P20	30/30/20		
	3000, 3150	0.2/0.2/5P10	20/20/40	100	250
		0.2/0.5/5P15	20/40/30		
		0.2/0.5/5P20	20/40/20		
		0.2/5P10/5P15	20/20/20		
		0.5/5P10/5P20	40/20/15		

外形尺寸图 Overall dimensions

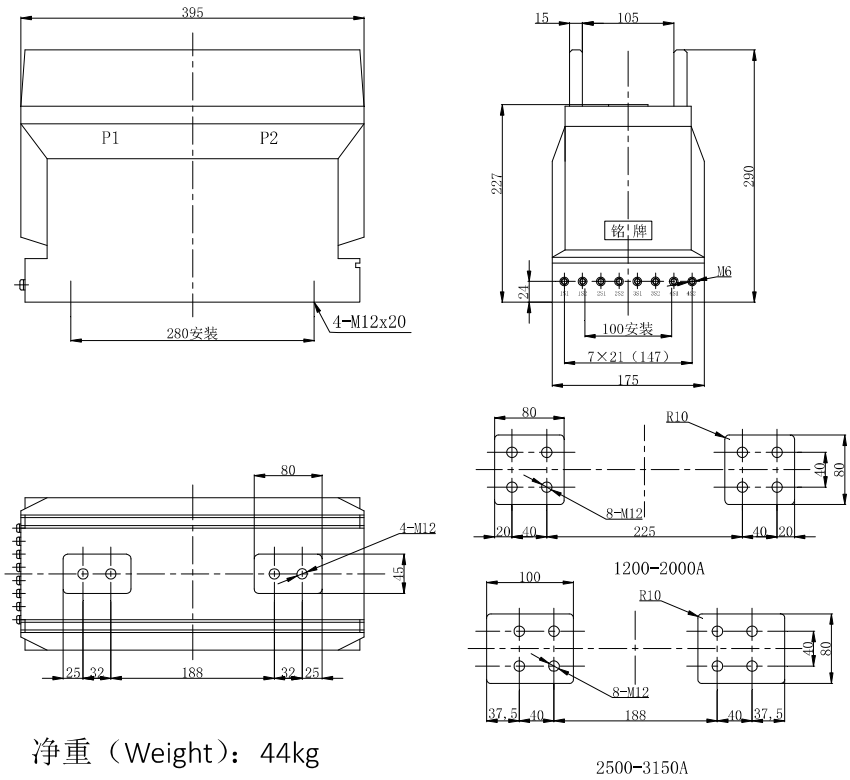

净重（Weight）：44kg

LZZBJ9-12/175h/2-2，LZZBJ14-10Q 电流互感器

型号 Type	额定一次电流 Rated primary current (A)	准确级组合 Accuracy classes combination	额定输出 Rated output (VA)	额定短时热电流 Rated short-time thermal current (kA/1s)	额定动稳定电流 Rated dynamic current (kA)
LZZBJ9-12/175h/2-2 LZZBJ14-10Q	20-150	0.2/10P10	15/15, 10/20	200I1n	500I1n
		0.5/10P10	15/15, 10/20		
		0.2/10P15	15/15, 10/20	150I1n	375I1n
		0.5/10P15	20/20		
		0.2/10P20	10/15	120I1n	300I1n
		0.5/10P20	15/15		
	200	0.2/10P10	15/15, 10/20	45	112.5
		0.5/10P10	15/15, 10/20	45	112.5
		0.2/10P15	15/15, 10/20	45	112.5
		0.5/10P15	20/20	45	112.5
		0.2/10P20	15/15	30	75
		0.5/10P20	15/15	30	75
	250	0.2/10P10	15/15, 10/20	45	112.5
		0.5/10P10	15/15, 10/20	45	112.5
		0.2/10P15	15/15, 10/20	45	112.5
		0.5/10P15	20/20	45	112.5
		0.2/10P20	15/15	30	75
		0.5/10P20	15/15	30	75
	300	0.2/10P10	15/15, 10/20	63	157.5
		0.5/10P10	15/15, 10/20	63	157.5
		0.2/10P15	15/15, 10/20	45	112.5
		0.5/10P15	20/20	45	112.5
		0.2/10P20	15/15	45	112.5
		0.5/10P20	15/15	45	112.5
	400	0.2/10P10	15/15, 10/20	63	157.5
		0.5/10P10	15/15, 10/20	63	157.5
		0.2/10P15	15/15, 10/20	63	157.5
		0.5/10P15	20/20	63	157.5
		0.2/10P20	15/15	45	112.5
		0.5/10P20	15/15	45	112.5
	500	0.2/10P10	15/15, 10/20	63	157.5
		0.5/10P10	15/15, 10/20	63	157.5
		0.2/10P15	15/15, 10/20	63	157.5
		0.5/10P15	20/20	63	157.5
		0.2/10P20	15/15	45	112.5
		0.5/10P20	15/15	45	112.5

型号 Type	额定一次电流 Rated primary current (A)	准确级组合 Accuracy classes combination	额定输出 Rated output (VA)	额定短时热电流 Rated short-time thermal current (kA/1s)	额定动稳定电流 Rated dynamic current (kA)
LZZBJ9-12/175h/2-2 LZZBJ14-10Q	600	0.2/10P10	15/20, 10/30	80	200
		0.5/10P10	20/30, 30/20	80	200
		0.2/10P15	15/15, 10/20	80	200
		0.5/10P15	20/20	80	200
		0.2/10P20	10/15	80	157.5
		0.5/10P20	15/15	63	157.5
	800	0.2/10P10	15/30, 20/20	80	200
		0.5/10P10	30/30	80	200
		0.2/10P15	15/20	80	200
		0.5/10P15	30/20	80	200
		0.2/10P20	15/20, 20/15	63	157.5
		0.5/10P20	20/20	63	157.5
	1000	0.2/10P10	15/30, 20/20	80	200
		0.5/10P10	30/30	80	200
		0.2/10P15	15/20	80	200
		0.5/10P15	30/20	80	200
		0.2/10P20	15/20, 20/15	63	157.5
		0.5/10P20	20/20	63	157.5
	1200，1250	0.2/10P10	15/30, 20/20	100	250
		0.5/10P10	30/30	100	250
		0.2/10P15	15/20, 20/15	100	250
		0.5/10P15	30/20	100	250
		0.2/10P20	15/20	80	200
		0.5/10P20	20/20	80	200

外形尺寸图

Overall dimensions

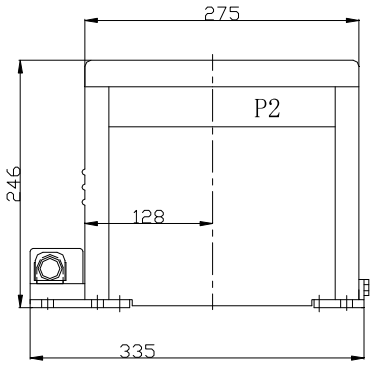

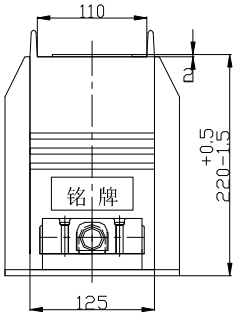

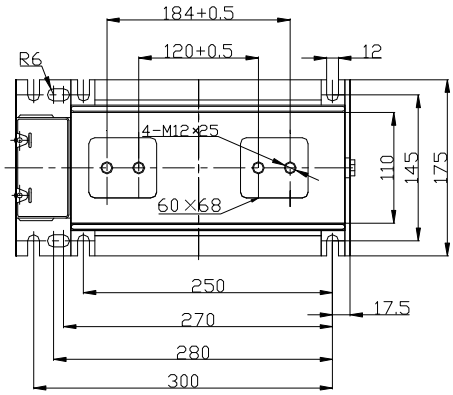

净重（Weight）：25-29kg

LZZBJ9-12/175h/2，LZZBJ14-10Q 电流互感器

型号 Type	额定一次电流 Rated primary current (A)	准确级组合 Accuracy classes combination	额定输出 Rated output (VA)	额定短时热电流 Rated short-time thermal current (kA/1s)	额定动稳定电流 Rated dynamic current (kA)
LZZBJ9-12/175h/2 LZZBJ14-10Q	300	0.2/10P10	15/15, 10/20	63	157.5
		0.5/10P10	15/15, 10/20	63	157.5
		0.2/10P15	15/15, 10/20	45	112.5
		0.5/10P15	20/20	45	112.5
		0.2/10P20	15/15	45	112.5
		0.5/10P20	15/15	45	112.5
	400	0.2/10P10	15/15, 10/20	63	157.5
		0.5/10P10	15/15, 10/20	63	157.5
		0.2/10P15	15/15, 10/20	63	157.5
		0.5/10P15	20/20	63	157.5
		0.2/10P20	15/15	45	112.5
		0.5/10P20	15/15	45	112.5
	500	0.2/10P10	15/15, 10/20	63	157.5
		0.5/10P10	15/15, 10/20	63	157.5
		0.2/10P15	15/15, 10/20	63	157.5
		0.5/10P15	20/20	63	157.5
		0.2/10P20	15/15	45	112.5
		0.5/10P20	15/15	45	112.5
	600	0.2/10P10	15/20, 10/30	80	200
		0.5/10P10	20/30, 30/20	80	200
		0.2/10P15	15/15, 10/20	80	200
		0.5/10P15	20/20	80	200
		0.2/10P20	10/15	80	157.5
		0.5/10P20	15/15	63	157.5
	800	0.2/10P10	15/30, 20/20	80	200
		0.5/10P10	30/30	80	200
		0.2/10P15	15/20	80	200
		0.5/10P15	30/20	80	200
		0.2/10P20	15/20, 20/15	63	157.5
		0.5/10P20	20/20	63	157.5
	1000	0.2/10P10	15/30, 20/20	80	200
		0.5/10P10	30/30	80	200
		0.2/10P15	15/20	80	200
		0.5/10P15	30/20	80	200
		0.2/10P20	15/20, 20/15	63	157.5

型号 Type	额定一次电流 Rated primary current (A)	准确级组合 Accuracy classes combination	额定输出 Rated output (VA)	额定短时热电流 Rated short-time thermal current (kA/1s)	额定动稳定电流 Rated dynamic current (kA)
LZZBJ9-12/175h/2 LZZBJ14-10Q	1200-1500	0.5/10P20	20/20	63	157.5
		0.2/10P10	15/30, 20/20	100	250
		0.5/10P10	30/30	100	250
		0.2/10P15	15/20, 20/15	100	250
		0.5/10P15	30/20	100	250
		0.2/10P20	15/20	80	200
		0.5/10P20	20/20	80	200
	1500-2500	0.2/10P10	30/30	100	250
		0.5/10P10	60/30	100	250
		0.2/10P15	30/30	100	250
		0.5/10P15	60/30	100	250
		0.2/10P20	15/20	100	250
		0.5/10P20	20/20	100	250
	3000-3150	0.2/10P10	30/30	100	250
		0.5/10P10	60/30	100	250
		0.2/10P15	30/20	100	250
		0.5/10P15	60/20	100	250
		0.2/10P20	20/15	100	250
		0.5/10P20	25/15	100	250
	3000-3150(/1)	0.2/10P15	30/15	100	250
		0.5/10P15	60/15	100	250
		0.2/10P20	20/15	100	250
		0.5/10P20	25/15	100	250

外形尺寸图

Overall dimensions

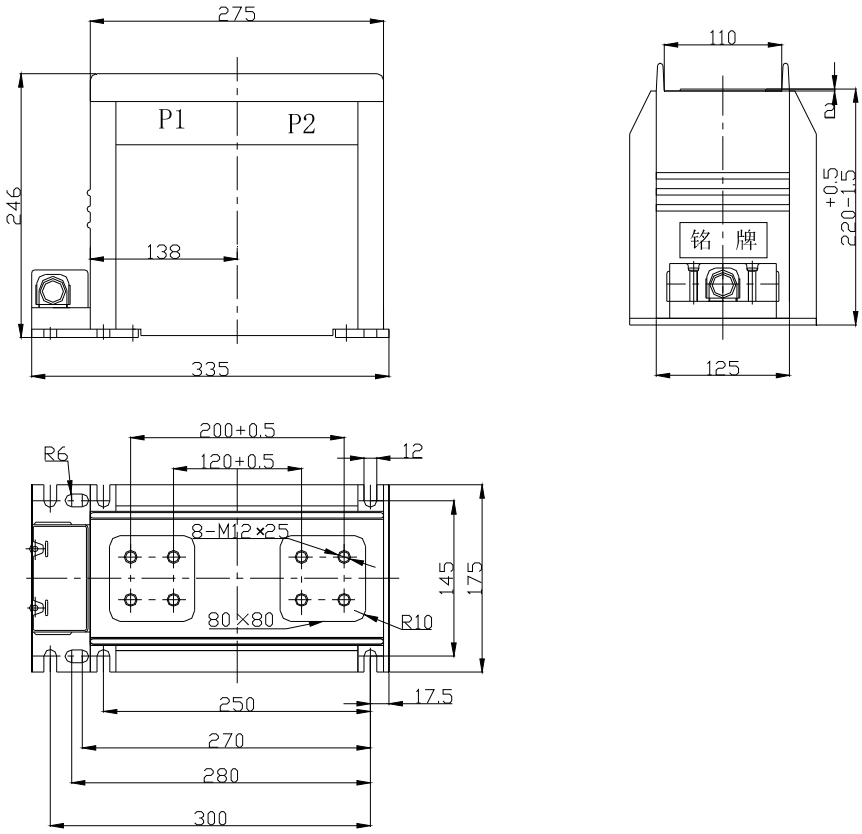

LZZBJ9-12/175h/2

LZZBJ14-10Q

净重（Weight）：29-35kg

LZZBJ9-12/175h/4-2，LZZBJ15-10Q 电流互感器

型号 Type	额定一次电流 Rated primary current (A)	准确级组合 Accuracy classes combination	额定输出 Rated output (VA)	额定短时热电流 Rated short-time thermal current (kA/1s)	额定动稳定电流 Rated dynamic current (kA)
LZZBJ9-12/175h/4-2 LZZBJ15-10Q	20, 30, 40, 50, 75, 100	0.2/0.2/5P10	10/10/40	150I1n	375I1n
		0.2/0.5/5P15	10/15/30		
		0.2/5P10/5P20	10/15/20		
		0.2/5P10/5P15	10/20/20		
		0.5/5P10/5P20	10/20/15		
	150, 200	0.2/0.2/5P10	10/10/40	31.5	80
		0.2/0.5/5P15	10/15/30		
		0.2/5P10/5P20	10/15/20		
		0.2/5P10/5P15	10/20/20		
		0.5/5P10/5P20	10/20/15		
	300, 400	0.2/0.2/5P10	10/10/40	45	112.5
		0.2/0.5/5P15	10/15/30		
		0.2/5P10/5P20	10/15/20		
		0.2/5P10/5P15	10/20/20		
		0.5/5P10/5P20	10/20/15		
	500	0.2/0.2/5P10	10/10/40	63	158
		0.2/0.5/5P15	10/15/30		
		0.2/5P10/5P20	10/15/20		
		0.2/5P10/5P15	10/20/20		
		0.5/5P10/5P20	10/20/15		
	600, 800	0.2/0.2/5P10	10/10/40	63	158
		0.2/0.5/5P15	10/20/40		
		0.2/5P10/5P20	10/20/30		
		0.2/5P10/5P15	10/20/30		
		0.5/5P10/5P20	10/20/20		
	1000, 1200, 1250	0.2/0.2/5P10	15/15/40	100	250
		0.2/0.5/5P15	15/30/30		
		0.2/5P10/5P20	10/30/20		
		0.2/5P10/5P15	15/30/30		
		0.5/5P10/5P20	30/30/20		
		0.5/5P10/5P20	30/30/20		

外形尺寸图

Overall dimensions

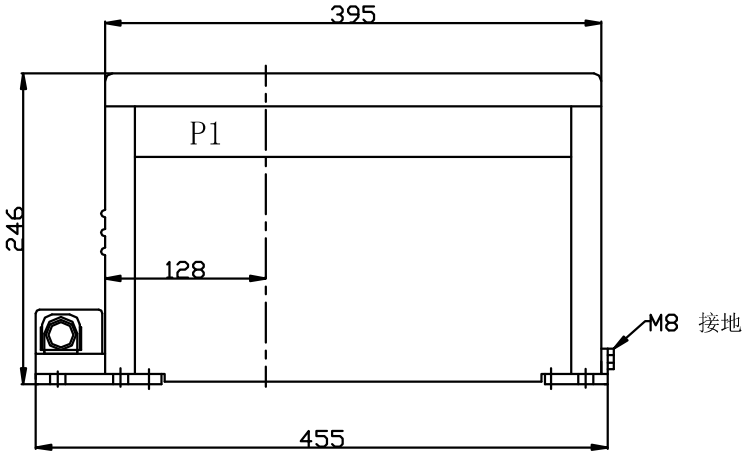

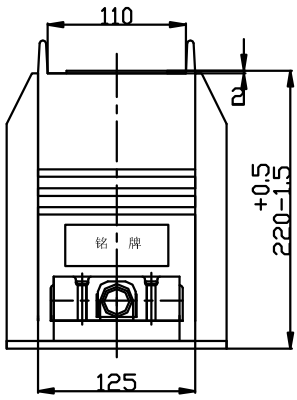

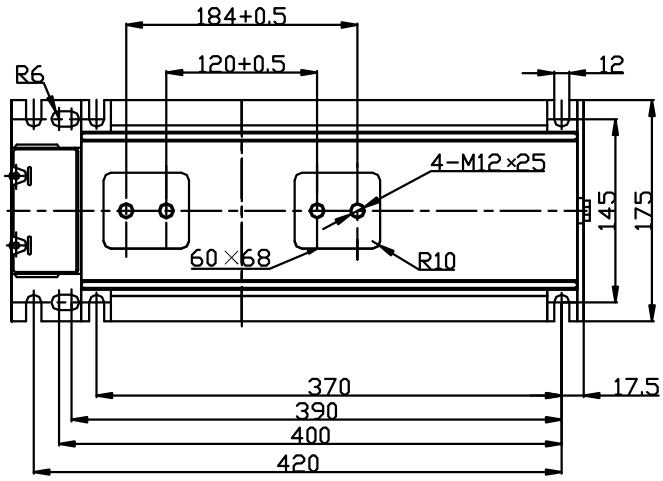

LZZBJ9-12/175h/4-2

LZZBJ15-10Q

净重（Weight）：37-43kg

LZZBJ9-12/175h/4，LZZBJ15-10Q 电流互感器

型号 Type	额定一次电流 Rated primary current (A)	准确级组合 Accuracy classes combination	额定输出 Rated output (VA)	额定短时热电流 Rated short-time thermal current (kA/1s)	额定动稳定电流 Rated dynamic current (kA)
LZZBJ9-12/175h/4 LZZBJ15-10Q	600，800	0. 2/0. 2/5P10	10/10/40	63	158
		0. 2/0. 5/5P15	10/20/40		
		0. 2/5P10/5P20	10/20/30		
		0. 2/5P10/5P15	10/20/30		
		0. 5/5P10/5P20	10/20/20		
	1000, 1200, 1250	0. 2/0. 2/5P10	15/15/40	100	250
		0. 2/0. 5/5P15	15/30/30		
		0. 2/5P10/5P20	10/30/20		
		0. 2/5P10/5P15	15/30/30		
		0. 5/5P10/5P20	30/30/20		
	1500	0. 2/0. 2/5P10	15/15/40	100	250
		0. 2/0. 5/5P15	15/30/30		
		0. 2/5P10/5P20	10/30/20		
		0. 2/5P10/5P15	15/30/30		
		0. 5/5P10/5P20	30/30/20		
	2000	0. 2/0. 2/5P10	15/15/40	100	250
		0. 2/0. 5/5P15	15/30/40		
		0. 2/5P10/5P20	15/30/30		
		0. 2/5P10/5P15	30/30/20		
		0. 5/5P10/5P20	15/15/40		
	2500	0. 2/0. 2/5P10	15/15/40	100	250
		0. 2/0. 5/5P15	15/30/40		
		0. 2/5P10/5P20	15/30/30		
		0. 2/5P10/5P15	30/30/20		
		0. 5/5P10/5P20	15/15/40		
	3000, 3150	0. 2/0. 2/5P10	20/20/40	100	250
		0. 2/0. 5/5P15	20/40/30		
		0. 2/5P10/5P20	20/40/20		
		0. 2/5P10/5P15	20/20/20		
		0. 5/5P10/5P20	40/20/15		

外形尺寸图

Overall dimensions

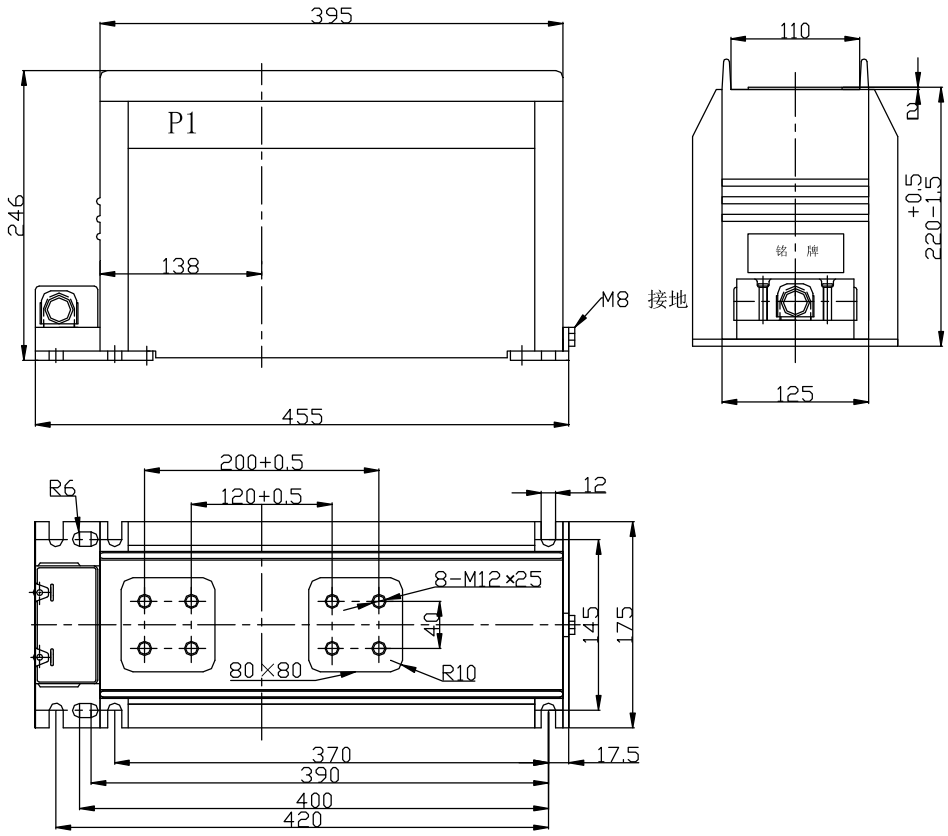

LZZBJ9-12/175h/4

LZZBJ15-10Q

净重（Weight）：37-43kg

LZZBJ9-12/175h/4F-2 电流互感器

型号 Type	额定一次电流 Rated primary current (A)	准确级组合 Accuracy classes combination	额定输出 Rated output (VA)	额定短时热电流 Rated short-time thermal current (kA/1s)	额定动稳定电流 Rated dynamic current (kA)
LZZBJ9-12/175h/4F-2	20, 30, 40, 50, 75, 100	0. 2/0. 2/5P10	10/10/40	150I1n	375I1n
		0. 2/0. 5/5P15	10/15/30		
		0. 2/5P10/5P20	10/15/20		
		0. 2/5P10/5P15	10/20/20		
		0. 5/5P10/5P20	10/20/15		
	150, 200	0. 2/0. 2/5P10	10/10/40	31. 5	80
		0. 2/0. 5/5P15	10/15/30		
		0. 2/5P10/5P20	10/15/20		
		0. 2/5P10/5P15	10/20/20		
		0. 5/5P10/5P20	10/20/15		
	300, 400	0. 2/0. 2/5P10	10/10/40	45	112. 5
		0. 2/0. 5/5P15	10/15/30		
		0. 2/5P10/5P20	10/15/20		
		0. 2/5P10/5P15	10/20/20		
		0. 5/5P10/5P20	10/20/15		
	500	0. 2/0. 2/5P10	10/10/40	63	158
		0. 2/0. 5/5P15	10/15/30		
		0. 2/5P10/5P20	10/15/20		
		0. 2/5P10/5P15	10/20/20		
		0. 5/5P10/5P20	10/20/15		
	600, 800	0. 2/0. 2/5P10	10/10/40	63	158
		0. 2/0. 5/5P15	10/20/40		
		0. 2/5P10/5P20	10/20/30		
		0. 2/5P10/5P15	10/20/30		
		0. 5/5P10/5P20	10/20/20		
	1000, 1200, 1250	0. 2/0. 2/5P10	15/15/40	100	250
		0. 2/0. 5/5P15	15/30/30		
		0. 2/5P10/5P20	10/30/20		
		0. 2/5P10/5P15	15/30/30		
		0. 5/5P10/5P20	30/30/20		

外形尺寸图

Overall dimensions

与 LZZBJ9-12/175h/4-2 的区别为一次端子后移

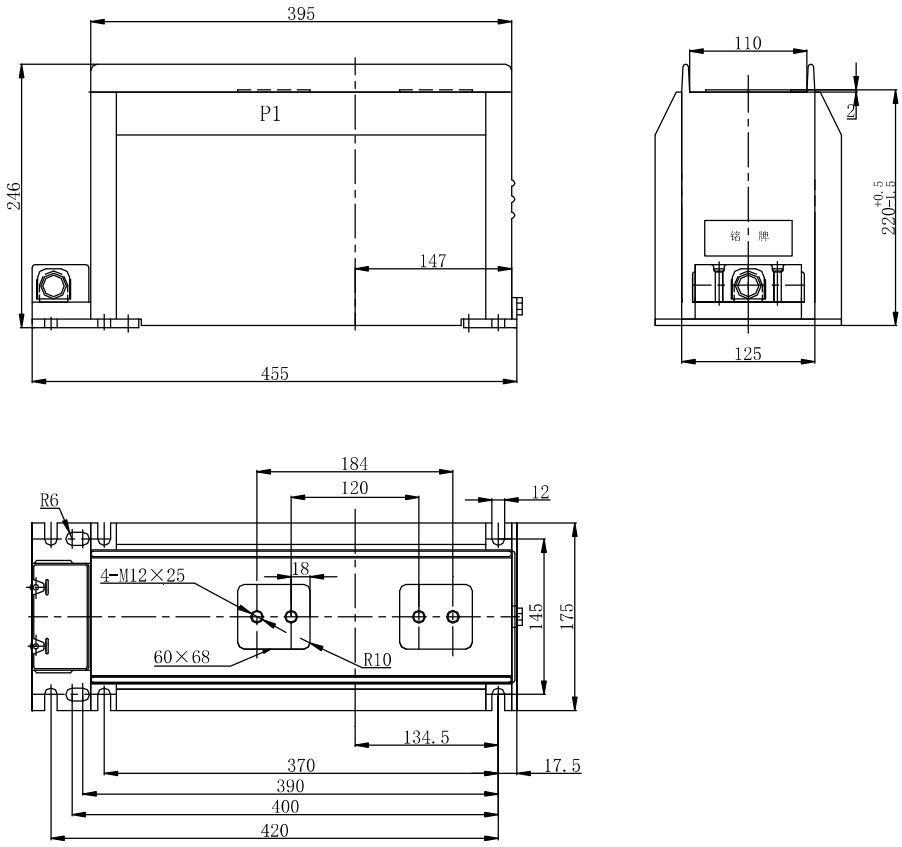

净重（Weight）：37-43kg

LZZBJ9-12/175h/4F-2

LZZBJ9-12/175h/4F 电流互感器

型号 Type	额定一次电流 Rated primary current (A)	准确级组合 Accuracy classes combination	额定输出 Rated output (VA)	额定短时热电流 Rated short-time thermal current (kA/1s)	额定动稳定电流 Rated dynamic current (kA)
LZZBJ9-12/175h/4F	600，800	0.2/0.2/5P10	10/10/40	63	158
		0.2/0.5/5P15	10/20/40		
		0.2/5P10/5P20	10/20/30		
		0.2/5P10/5P15	10/20/30		
		0.5/5P10/5P20	10/20/20		
	1000, 1200, 1250	0.2/0.2/5P10	15/15/40	100	250
		0.2/0.5/5P15	15/30/30		
		0.2/5P10/5P20	10/30/20		
		0.2/5P10/5P15	15/30/30		
		0.5/5P10/5P20	30/30/20		
	1500	0.2/0.2/5P10	15/15/40	100	250
		0.2/0.5/5P15	15/30/30		
		0.2/5P10/5P20	10/30/20		
		0.2/5P10/5P15	15/30/30		
		0.5/5P10/5P20	30/30/20		
	2000	0.2/0.2/5P10	15/15/40	100	250
		0.2/0.5/5P15	15/30/40		
		0.2/5P10/5P20	15/30/30		
		0.2/5P10/5P15	30/30/20		
		0.5/5P10/5P20	15/15/40		
	2500	0.2/0.2/5P10	15/15/40	100	250
		0.2/0.5/5P15	15/30/40		
		0.2/5P10/5P20	15/30/30		
		0.2/5P10/5P15	30/30/20		
		0.5/5P10/5P20	15/15/40		
	3000, 3150	0.2/0.2/5P10	20/20/40	100	250
		0.2/0.5/5P15	20/40/30		
		0.2/5P10/5P20	20/40/20		
		0.2/5P10/5P15	20/20/20		
		0.5/5P10/5P20	40/20/15		

外形尺寸图

Overall dimensions

与 LZZBJ9-12/175h/4 的区别为一次端子后移

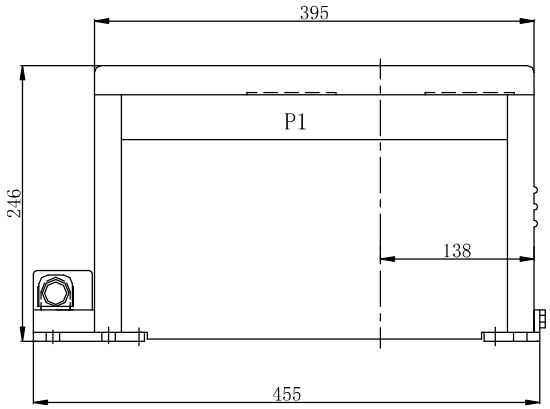

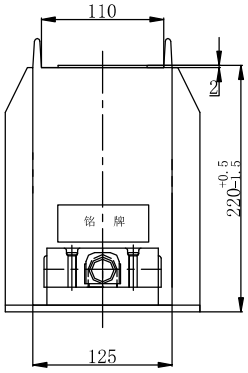

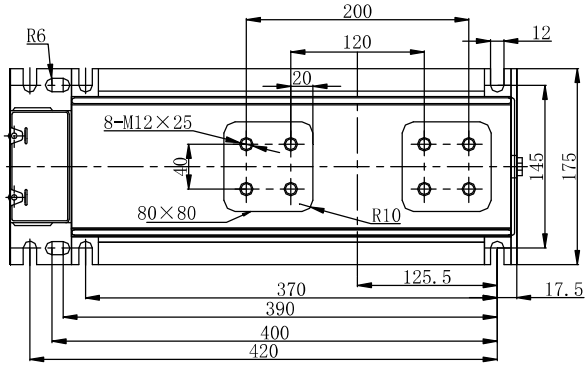

LZZBJ9-12/175h/4F

净重(Weight):37-43kg

LZZBJ9-12/185h/2-2，LZZBJ12-10Q 电流互感器

型号 Type	额定一次电流 Rated primary current (A)	准确级组合 Accuracy classes combination	额定输出 Rated output (VA)	额定短时热电流 Rated short-time thermal current (kA/1s)	额定动稳定电流 Rated dynamic current (kA)
LZZBJ9-12/185h/2-2 LZZBJ12-10Q	20	0.2	10, 15, 20	10	25
		0.5	10, 15, 20	10	25
		0.2S	10, 15, 20	10	25
		0.2/10P10	15/15	7	18
	25	0.2	10, 15	10	25
		0.5	10, 15	10	25
		0.2S	10, 15	10	25
		0.2/0.5	10/15	10	25
		0.2/5P10，0.5/5P10	10/15，15/15	10	25
	30	0.2	10, 15, 20	10	25
		0.5	10, 15, 20	10	25
		0.2S	10, 15, 20	10	25
		0.2/0.2	10/10，15/15	10	25
		0.2S/0.5	10/10，15/15	10	25
		0.2/10P10	10/10, 10/15, 15/15	10	25
		0.5/10P10	10/10, 10/15, 15/15	10	25
		0.5/10P15	10/10	10	25
	40	0.2	10, 15, 20	10	25
		0.5	10, 15, 20	20	50
		0.2S	10, 15, 20	10	25
		0.2/0.2	10/10，15/15	10	25
		0.2S/0.5	10/10，15/15	10	25
		0.2/10P10，0.5/10P10	10/15, 15/15, 20/20	10	25
		0.5/10P15	10/10	10	25
	50，60	0.2	10, 15, 20	20	50
		0.5	10, 15, 20	25	63
		0.2S	10, 15, 20	20	50
		0.2/0.2，0.2S/0.2	10/10, 15/15	20	50
		0.2/0.5，0.2S/0.5	10/15, 15/15	20	50
		0.2/10P10，0.5/10P10	10/15, 15/15	20	50
		0.2/10P15，0.5/10P15	10/10, 15/15	10	25
		0.2/10P20，0.5/10P20	10/10, 15/15	10	25
		0.2/0.5/10P10	15/15/15	10	25
	75	0.2	10, 15, 20	31.5	80
		0.5	10, 15, 20	31.5	80
		0.2S	10, 15, 20	31.5	80
		0.2/0.2，0.2S/0.2	10/10, 15/15	25	63
		0.2/0.5，0.2S/0.5	10/15, 15/15	25	63
		0.2/10P10，0.5/10P10	10/15, 15/15	25	63
		0.2/10P15，0.5/10P15	10/10, 15/15	12	30
		0.2/10P20，0.5/10P20	10/10, 15/15	12	30
		0.2/0.5/10P10	15/15/15	12	30
	100	0.2	10, 15, 20	40	100
		0.5	10, 15, 20	40	100
		0.2S	10, 15, 20	40	100
		0.2/0.2, 0.2S/0.2	10/10, 15/15	40	100
		0.2/0.5, 0.2S/0.5	10/15, 15/15	40	100
		0.2/10P10, 0.5/10P10	10/15, 15/15	40	100
		0.2/10P15, 0.5/10P15	10/10, 15/15	20	50
		0.2/10P20, 0.5/10P20	10/10, 15/15	20	50
		0.2/0.5/10P10	15/15/15	20	50

型号 Type	额定一次电流 Rated primary current (A)	准确级组合 Accuracy classes combination	额定输出 Rated output (VA)	额定短时热电流 Rated short-time thermal current (kA/1s)	额定动稳定电流 Rated dynamic current (kA)
LZZBJ9-12/185h/2-2 LZZBJ12-10Q	125	0.2，0.2S，0.5	10, 15	40	100
		0.2/10P10，0.5/10P10	15/15	40	100
		0.2/10P20，0.5/10P20	15/15	20	50
	150	0.2	10, 15, 20	50	125
		0.5	10, 15, 20	50	125
		0.2S	10, 15, 20	50	125
		0.2/0.2, 0.2S/0.2	10/10, 15/15	50	125
		0.2/0.5, 0.2S/0.5	10/15, 15/15, 20/20	50	125
		0.2/10P10, 0.5/10P10	10/15, 15/15	50	125
		0.2/10P15, 0.5/10P15	10/10, 15/15	40	100
		0.2/10P20, 0.5/10P20	10/10, 15/15	25	63
		0.2/0.5/10P10	15/15/15	25	63
	200，250	0.2	10, 15, 20	50	125
		0.5	10, 15, 20	63	160
		0.2S	10, 15, 20	50	125
		0.2/0.2, 0.2S/0.2	10/10, 15/15, 20/20	50	125
		0.2/0.5, 0.2S/0.5	10/15, 15/15, 20/20	50	125
		0.2/10P10, 0.5/10P10	10/15, 15/15, 15/20	50	125
		0.2/10P15, 0.5/10P15	10/10, 15/15	31.5	80
		0.2/10P20, 0.5/10P20	10/10, 15/15	31.5	80
		0.2/0.5/10P10	15/15/15	31.5	80
	300，400	0.2	10, 15, 20, 30	63	160
		0.5	10, 15, 20, 30	63	160
		0.2S	10, 15, 20, 30	63	160
		0.2/0.2, 0.2S/0.2	10/10, 15/15, 20/20	63	160
		0.2/0.5, 0.2S/0.5	10/10, 10/15, 20/20	63	160
		0.2/10P10, 0.5/10P10	10/15, 15/15, 15/20	63	160
		0.2/10P15, 0.5/10P15	10/10, 15/15	40	100
		0.2/10P20, 0.5/10P20	10/10, 15/15	40	100
		0.2/0.5/10P10	15/15/15	40	100
	500, 600, 630	0.2	10, 15, 20, 30	63	160
		0.5	10, 15, 20, 30	63	160
		0.2S	10, 15, 20, 30	63	160
		0.2/0.2, 0.2S/0.2	10/10, 15/15, 20/20	63	160
		0.2/0.5, 0.2S/0.5	10/15, 15/15, 20/20	63	160
		0.2/10P10, 0.5/10P10	10/15, 15/15, 15/20, 30/30	63	160
		0.2/10P15, 0.5/10P15	10/10, 15/15	63	160
		0.2/10P20, 0.5/10P20	10/10, 15/15	63	160
		0.2/0.5/10P10	15/15/15, 15/15/30	63	160
		0.2/0.5/10P20	15/15/15	63	160
		0.2/10P10/10P20	15/15/15	63	160
	750, 800	0.2	10, 15, 20, 30	80	200
		0.5	10, 15, 20, 30	80	200
		0.2S	10, 15, 20, 30	80	200
		0.2/0.2, 0.2S/0.2	10/10, 15/15, 20/20	80	200
		0.2/0.5, 0.2S/0.5	10/15, 15/15, 20/20	80	200
		0.2/10P10, 0.5/10P10	10/15, 15/15, 15/20, 30/30	80	200
		0.2/10P15, 0.5/10P15	10/10, 15/15, 30/30	80	200
		0.2/10P20, 0.5/10P20	10/10, 15/15, 30/30	80	200

型号 Type	额定一次电流 Rated primary current (A)	准确级组合 Accuracy classes combination	额定输出 Rated output (VA)	额定短时热电流 Rated short-time thermal current (kA/1s)	额定动稳定电流 Rated dynamic current (kA)
LZZBJ9-12/185h/2-2 LZZBJ12-10Q	750, 800	0. 2/0. 5/10P10	15/15/15, 15/15/30	80	200
		0. 2/0. 5/10P20	15/15/15, 15/15/20	80	200
		0. 2/10P10/10P20	15/15/15, 15/15/20	80	200
		0. 2	10, 15, 20, 30	100	250
		0. 5	10, 15, 20, 30	100	250
	1000, 1200, 1250	0. 2S	10, 15, 20, 30	100	250
		0. 2/0. 2, 0. 2S/0. 2	10/10, 15/15, 20/20	100	250
		0. 2/0. 5, 0. 2S/0. 5	10/15, 15/15, 20/20	100	250
		0. 2/10P10, 0. 5/10P10	10/15, 15/15, 15/20, 30/30	100	250
		0. 2/10P15, 0. 5/10P15	10/10, 15/15, 30/30	100	250
		0. 2/10P20, 0. 5/10P20	10/10, 15/15, 30/30	100	250
		0. 2/0. 5/10P10	15/15/15, 15/15/30	100	250
		0. 2/0. 5/10P20	15/15/15, 15/15/20	100	250
		0. 2/10P10/10P20	15/15/15, 15/15/20	100	250

外形尺寸图
Overall dimensions

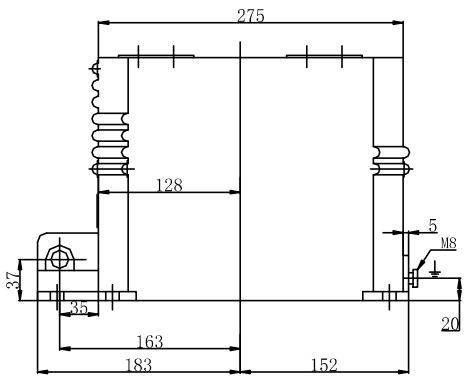

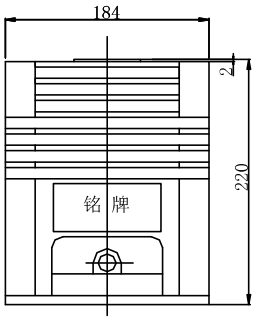

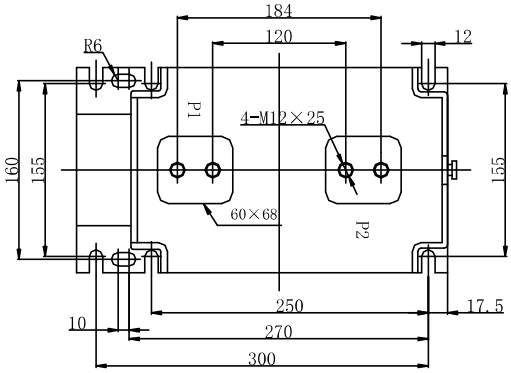

LZZBJ9-12/185h/2-2
LZZBJ12-10Q
净重（Weight）：27-32kg

LZZBJ9-12/185h/2 电流互感器

型号 Type	额定一次电流 Rated primary current (A)	准确级组合 Accuracy classes combination	额定输出 Rated output (VA)	额定短时热电流 Rated short-time thermal current (kA/1s)	额定动稳定电流 Rated dynamic current (kA)
LZZBJ9-12/185h/2,	20	0.2	10, 15, 20	10	25
		0.5	10, 15, 20	10	25
		0.2S	10, 15, 20	10	25
		0.2/10P10	15/15	7	18
	25	0.2	10, 15	10	25
		0.5	10, 15	10	25
		0.2S	10, 15	10	25
		0.2/0.5	10/15	10	25
		0.2/5P10，0.5/5P10	10/15, 15/15	10	25
	30	0.2	10, 15, 20	10	25
		0.5	10, 15, 20	10	25
		0.2S	10, 15, 20	10	25
		0.2/0.2	10/10, 15/15	10	25
		0.2S/0.5	10/10, 15/15	10	25
		0.2/10P10	10/10，10/15，15/15	10	25
		0.5/10P10	10/10，10/15，15/15	10	25
		0.5/10P15	10/10	10	25
	40	0.2	10, 15, 20	10	25
		0.5	10, 15, 20	20	50
		0.2S	10, 15, 20	10	25
		0.2/0.2	10/10, 15/15	10	25
		0.2S/0.5	10/10, 15/15	10	25
		0.2/10P10，0.5/10P10	10/15, 15/15, 20/20	10	25
		0.5/10P15	10/10	10	25
	50，60	0.2	10, 15, 20	20	50
		0.5	10, 15, 20	25	63
		0.2S	10, 15, 20	20	50
		0.2/0.2，0.2S/0.2	10/10, 15/15	20	50
		0.2/0.5，0.2S/0.5	10/15, 15/15	20	50
		0.2/10P10，0.5/10P10	10/15, 15/15	20	50
		0.2/10P15，0.5/10P15	10/10, 15/15	10	25
		0.2/10P20，0.5/10P20	10/10, 15/15	10	25
		0.2/0.5/10P10	15/15/15	10	25
	75	0.2	10, 15, 20	31.5	80
		0.5	10, 15, 20	31.5	80
		0.2S	10, 15, 20	31.5	80
		0.2/0.2，0.2S/0.2	10/10, 15/15	25	63
		0.2/0.5，0.2S/0.5	10/15, 15/15	25	63
		0.2/10P10，0.5/10P10	10/15, 15/15	25	63
		0.2/10P15，0.5/10P15	10/10, 15/15	12	30
		0.2/10P20，0.5/10P20	10/10, 15/15	12	30
		0.2/0.5/10P10	15/15/15	12	30
	100	0.2	10, 15, 20	40	100
		0.5	10, 15, 20	40	100
		0.2S	10, 15, 20	40	100
		0.2/0.2, 0.2S/0.2	10/10, 15/15	40	100
		0.2/0.5, 0.2S/0.5	10/15, 15/15	40	100
		0.2/10P10, 0.5/10P10	10/15, 15/15	40	100
		0.2/10P15, 0.5/10P15	10/10, 15/15	20	50
		0.2/10P20, 0.5/10P20	10/10, 15/15	20	50

型号 Type	额定一次电流 Rated primary current (A)	准确级组合 Accuracy classes combination	额定输出 Rated output (VA)	额定短时热电流 Rated short-time thermal current (kA/1s)	额定动稳定电流 Rated dynamic current (kA)
LZZBJ9-12/185h/2	100	0.2/0.5/10P10	15/15/15	20	50
	125	0.2，0.2S，0.5	10, 15	40	100
		0.2/10P10，0.5/10P10	15/15	40	100
		0.2/10P20，0.5/10P20	15/15	20	50
	150	0.2	10, 15, 20	50	125
		0.5	10, 15, 20	50	125
		0.2S	10, 15, 20	50	125
		0.2/0.2, 0.2S/0.2	10/10, 15/15	50	125
		0.2/0.5, 0.2S/0.5	10/15, 15/15, 20/20	50	125
		0.2/10P10, 0.5/10P10	10/15, 15/15	50	125
		0.2/10P15, 0.5/10P15	10/10, 15/15	40	100
		0.2/10P20, 0.5/10P20	10/10, 15/15	25	63
		0.2/0.5/10P10	15/15/15	25	63
	200，250	0.2	10, 15, 20	50	125
		0.5	10, 15, 20	63	160
		0.2S	10, 15, 20	50	125
		0.2/0.2, 0.2S/0.2	10/10, 15/15, 20/20	50	125
		0.2/0.5, 0.2S/0.5	10/15, 15/15, 20/20	50	125
		0.2/10P10, 0.5/10P10	10/15, 15/15, 15/20	50	125
		0.2/10P15, 0.5/10P15	10/10, 15/15	31.5	80
		0.2/10P20, 0.5/10P20	10/10, 15/15	31.5	80
		0.2/0.5/10P10	15/15/15	31.5	80
	300，400	0.2	10, 15, 20, 30	63	160
		0.5	10, 15, 20, 30	63	160
		0.2S	10, 15, 20, 30	63	160
		0.2/0.2, 0.2S/0.2	10/10, 15/15, 20/20	63	160
		0.2/0.5, 0.2S/0.5	10/10, 10/15, 20/20	63	160
		0.2/10P10, 0.5/10P10	10/15, 15/15, 15/20	63	160
		0.2/10P15, 0.5/10P15	10/10, 15/15	40	100
		0.2/10P20, 0.5/10P20	10/10, 15/15	40	100
		0.2/0.5/10P10	15/15/15	40	100
	500, 600, 630	0.2	10, 15, 20, 30	63	160
		0.5	10, 15, 20, 30	63	160
		0.2S	10, 15, 20, 30	63	160
		0.2/0.2, 0.2S/0.2	10/10, 15/15, 20/20	63	160
		0.2/0.5, 0.2S/0.5	10/15, 15/15, 20/20	63	160
		0.2/10P10, 0.5/10P10	10/15, 15/15, 15/20, 30/30	63	160
		0.2/10P15, 0.5/10P15	10/10, 15/15	63	160
		0.2/10P20, 0.5/10P20	10/10, 15/15	63	160
		0.2/0.5/10P10	15/15/15, 15/15/30	63	160
		0.2/0.5/10P20	15/15/15	63	160
		0.2/10P10/10P20	15/15/15	63	160
	750, 800	0.2	10, 15, 20, 30	80	200
		0.5	10, 15, 20, 30	80	200
		0.2S	10, 15, 20, 30	80	200
		0.2/0.2, 0.2S/0.2	10/10, 15/15, 20/20	80	200

型号 Type	额定一次电流 Rated primary current (A)	准确级组合 Accuracy classes combination	额定输出 Rated output (VA)	额定短时热电流 Rated short-time thermal current (kA/1s)	额定动稳定电流 Rated dynamic current (kA)
LZZBJ9-12/185h/2	750, 800	0.2/0.5, 0.2S/0.5	10/15, 15/15, 20/20	80	200
		0.2/10P10, 0.5/10P10	10/15, 15/15, 15/20, 30/30	80	200
		0.2/10P15, 0.5/10P15	10/10, 15/15, 30/30	80	200
		0.2/10P20, 0.5/10P20	10/10, 15/15, 30/30	80	200
		0.2/0.5/10P10	15/15/15, 15/15/30	80	200
		0.2/0.5/10P20	15/15/15, 15/15/20	80	200
		0.2/10P10/10P20	15/15/15, 15/15/20	80	200
	1000-2000	0.2	10, 15, 20, 30	100	250
		0.5	10, 15, 20, 30	100	250
		0.2S	10, 15, 20, 30	100	250
		0.2/0.2, 0.2S/0.2	10/10, 15/15, 20/20	100	250
		0.2/0.5, 0.2S/0.5	10/15, 15/15, 20/20	100	250
		0.2/10P10, 0.5/10P10	10/15, 15/15, 15/20, 30/30	100	250
		0.2/10P15, 0.5/10P15	10/10, 15/15, 30/30	100	250
		0.2/10P20, 0.5/10P20	10/10, 15/15, 30/30	100	250
		0.2/0.5/10P10	15/15/15, 15/15/30	100	250
		0.2/0.5/10P20	15/15/15, 15/15/20	100	250
		0.2/10P10/10P20	15/15/15, 15/15/20	100	250
	2500-3150	0.2	10, 15, 20, 30	100	250
		0.5	10, 15, 20, 30	100	250
		0.2S	10, 15, 20, 30	100	250
		0.2/0.2, 0.2S/0.2	10/10, 15/15, 20/20	100	250
		0.2/0.5, 0.2S/0.5	10/15, 15/15, 20/20	100	250
		0.2/10P10, 0.5/10P10	10/15, 15/15, 15/20, 30/30	100	250
		0.2/10P15, 0.5/10P15	10/10, 15/15, 20/20	100	250
		0.2/10P20, 0.5/10P20	10/10, 15/15	100	250
		0.2/0.5/10P10	15/15/15	100	250

外形尺寸图
Overall dimensions

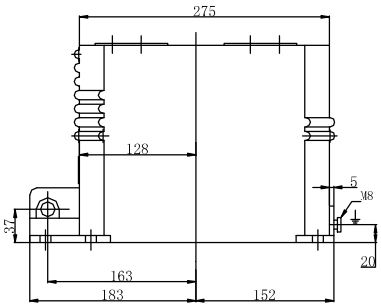

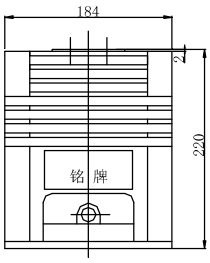

LZZBJ9-12/185h/2
LZZBJ12-10Q

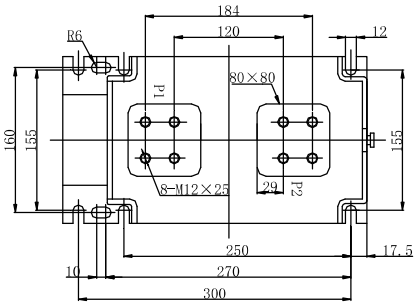

净重（Weight）：27-39kg

LZZBJ9-12/185h/3-2 电流互感器

型号 Type	额定一次电流 Rated primary current (A)	准确级组合 Accuracy classes combination	额定输出 Rated output (VA)	额定短时热电流 Rated short-time thermal current (kA/1s)	额定动稳定电流 Rated dynamic current (kA)
LZZBJ9-12/185h/3-2	20	0.2	20	4	10
		0.5	30		
		0.2/10P10	15/15		
	25	0.2	20	5	12.5
		0.5	30		
		0.2/10P10	15/15		
	30	0.2	20	10	25
		0.5	30		
		0.2/0.5	20/20		
		0.5/10P10	15/15		
	40	0.2	20	12	30
		0.5S	20		
		0.5	30		
		0.2/0.5	20/20		
		0.5/10P10	15/15		
	50	0.2	20	15	37.5
		0.5S	20		
		0.5	30		
		0.2/0.5	20/30		
		0.2/10P10	15/15		
		10P10/10P10	10/15		
	75	0.2	20	30	75
		0.5S	30		
		0.5	30		
		0.2/0.5	20/30		
		0.2/10P10	15/15		
		10P10/10P10	10/15		
	100	0.2	20	31.5	80
		0.5S	30		
		0.5	30		
		0.2/0.5	20/30		
		0.2/10P10	20/30	20	50
		0.2/10P15	15/20		
		10P10/10P10	15/15		
	150	0.2	20	45	112.5
		0.5S	30		
		0.5	30		
		0.2/0.5	20/30		
		0.2/10P10	20/30	31.5	80
		0.5/10P15	15/20		
	200	0.2	20	50	125
		0.5S	30		
		0.5	30		
		0.2/0.5	20/40		
		0.2/10P10	20/30	40	100
		0.2/10P15	20/20		
		0.5/10P20	15/15		
	300	0.2	20	63	160
		0.5S	30		

型号 Type	额定一次电流 Rated primary current (A)	准确级组合 Accuracy classes combination	额定输出 Rated output (VA)	额定短时热电流 Rated short-time thermal current (kA/1s)	额定动稳定电流 Rated dynamic current (kA)
LZZBJ9-12/185h/3-2	300	0.5	30	63	160
		0.5/10P15	20/30		
	300	0.2/10P20	20/20	40	100
		10P10/10P10	15/15		
		0.5/10P15/10P15	10/10/10		
	400	0.2	20	63	160
		0.5	30		
		0.2S	20		
		0.5/10P15	20/30	45	112.5
		0.2/10P20	20/20		
		10P10/10P10	20/20		
		0.5/10P15/10P15	10/15/15		
	500	0.2	30	63	160
		0.5	30		
		0.2S	30		
		0.5/10P15	20/30		
		0.2/10P20	20/20		
		10P10/10P10	20/20		
		0.5/10P15/10P15	10/15/10		
	600	0.2	30	63	160
		0.5	30		
		0.2S	30		
		0.5/10P15	20/30		
		0.2/10P20	20/20		
		10P10/10P10	20/20		
		0.5/10P15/10P15	10/15/15		
	800	0.2S	30	80	200
		0.5	40		
		0.2/0.5	30/30		
		0.2/10P10	20/30		
		0.5/10P15	20/20		
		0.2/0.5/10P10	15/20/20		
		0.2/0.5/10P20	15/20/20		
		0.5/10P15/10P15	15/15/15		
	1000	0.2S	30	100	250
		0.5	40		
		0.2/0.5	30/30		
		0.2/10P10	20/30		
		0.5/10P15	20/20		
		0.2/0.5/10P10	15/20/20		
		0.2/0.5/10P20	15/20/20		
		0.5/10P15/10P15	15/15/15		
	1200	0.2S	30	100	250
		0.5	40		
		0.2/0.5	30/30		
		0.2/10P10	20/30		
		0.5/10P15	20/20		
		0.2/0.5/10P10	15/20/20		
		0.2/0.5/10P20	15/20/20		
		0.5/10P15/10P15	15/15/15		
	1250	0.2S	30	100	250

型号 Type	额定一次电流 Rated primary current (A)	准确级组合 Accuracy classes combination	额定输出 Rated output (VA)	额定短时热电流 Rated short-time thermal current (kA/1s)	额定动稳定电流 Rated dynamic current (kA)
LZZBJ9-12/185h/3-2	1250	0.5	40	100	250
		0.2/0.5	30/30		
		0.2/10P10	20/40		
		0.5/10P15	20/30		
		0.2/0.5/10P10	15/20/30		
		0.2/0.5/10P20	15/20/20		
		0.5/10P20/10P20	15/15/15		

外形尺寸图 Overall dimensions

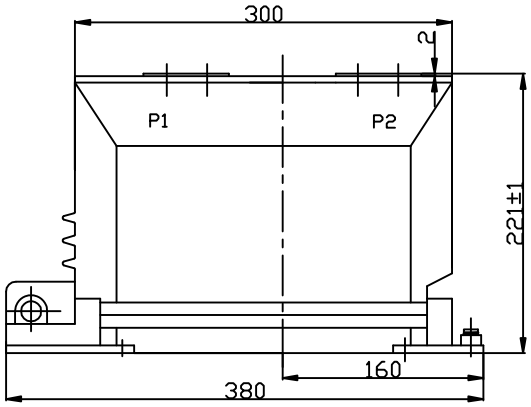

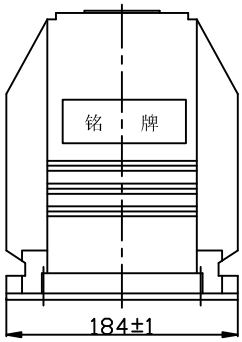

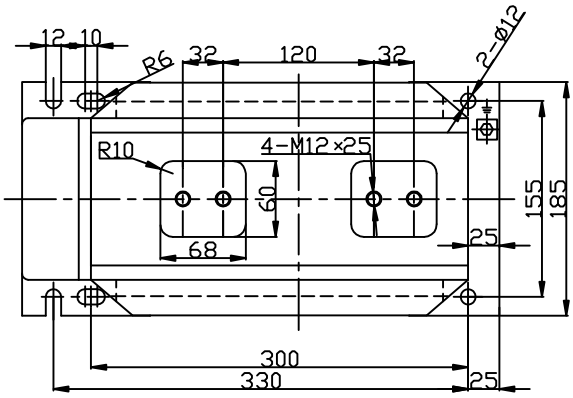

LZZBJ9-12/185h/3-2

净重（Weight）：40.5kg

LZZBJ9-12/185h/3 电流互感器

型号 Type	额定一次电流 Rated primary current (A)	准确级组合 Accuracy classes combination	额定输出 Rated output (VA)	额定短时热电流 Rated short-time thermal current (kA/1s)	额定动稳定电流 Rated dynamic current (kA)
LZZBJ9-12/185h/3	800	0.2S	30	80	200
		0.5	40		
		0.2/0.5	30/30		
		0.2/10P10	20/30		
		0.5/10P15	20/20		
		0.2/0.5/10P10	15/20/20		
		0.2/0.5/10P20	15/20/20		
		0.5/10P10/10P20	15/15/10		
		0.5/10P15/10P15	15/15/15		
	1000	0.2S	30	100	250
		0.5	40		
		0.2/0.5	30/30		
		0.2/10P10	20/30		
		0.5/10P15	20/20		
		0.2/0.5/10P10	15/20/20		
		0.2/0.5/10P20	15/20/20		
		0.5/10P10/10P20	15/15/10		
		0.5/10P15/10P15	15/15/15		
	1200	0.2S	30	100	250
		0.5	40		
		0.2/0.5	30/30		
		0.2/10P10	20/30		
		0.5/10P15	20/20		
		0.2/0.5/10P10	15/20/20		
		0.2/0.5/10P20	15/20/20		
		0.5/10P10/10P20	15/15/10		
		0.5/10P15/10P15	15/15/15		
	1250	0.2S	30	100	250
		0.5	40		
		0.2/0.5	30/30		
		0.2/10P10	20/40		
		0.5/10P15	20/30		
		0.2/0.5/10P10	15/20/30		
		0.2/0.5/10P20	15/20/20		
		0.5/10P10/10P20	15/20/20		
		0.5/10P20/10P20	15/15/15		
	1500	0.2S	30	100	250
		0.5	40		
		0.2/0.5	30/30		
		0.2/10P10	20/40		
		0.5/10P15	20/30		
		0.2/0.5/10P10	15/20/30		
		0.2/0.5/10P20	15/20/20		
		0.5/10P10/10P15	15/20/20		
		0.5/10P15/10P15	15/15/15		
	2000	0.2S	30	100	250
		0.5	40		
		0.2/0.5	30/30		
		0.2/10P10	20/40		

型号 Type	额定一次电流 Rated primary current (A)	准确级组合 Accuracy classes combination	额定输出 Rated output (VA)	额定短时热电流 Rated short-time thermal current (kA/1s)	额定动稳定电流 Rated dynamic current (kA)
LZZBJ9-12/185h/3	2000	0.5/10P15	20/30	100	250
		0.2/0.5/10P10	15/20/30		
		0.2/0.5/10P20	15/20/20		
		0.5/10P10/10P10	15/15/20		
		0.5/10P10/10P15	15/15/15		
	2500	0.2S	30	100	250
		0.5	40		
		0.2/0.5	30/30		
		0.2/10P10	20/30		
		0.5/10P15	20/20		
		0.5/0.5/10P10	20/20/15		
		0.2/0.5/10P10	20/20/15		
		0.2/10P10/10P10	15/15/15		
		0.5/10P10/10P10	15/15/15		
	3000 （二次电流为 5A）	0.2S	30	100	250
		0.5	40		
		0.2/0.5	30/30		
		0.2/10P10	20/30		
		0.5/10P15	20/20		
		0.5/0.5/10P10	20/20/15		
		0.2/0.5/10P10	20/20/15		
		0.2/10P10/10P10	15/15/10		
		0.5/10P10/10P10	15/15/10		
	3150 （二次电流为 5A）	0.2S	30	100	250
		0.5	40		
		0.2/0.5	30/30		
		0.2/10P10	20/30		
		0.5/10P15	20/20		
		0.5/0.5/10P10	20/20/15		
		0.2/0.5/10P10	20/20/15		
		0.2/10P10/10P10	15/15/10		
		0.5/10P10/10P10	15/15/10		

外形尺寸图 Overall dimensions

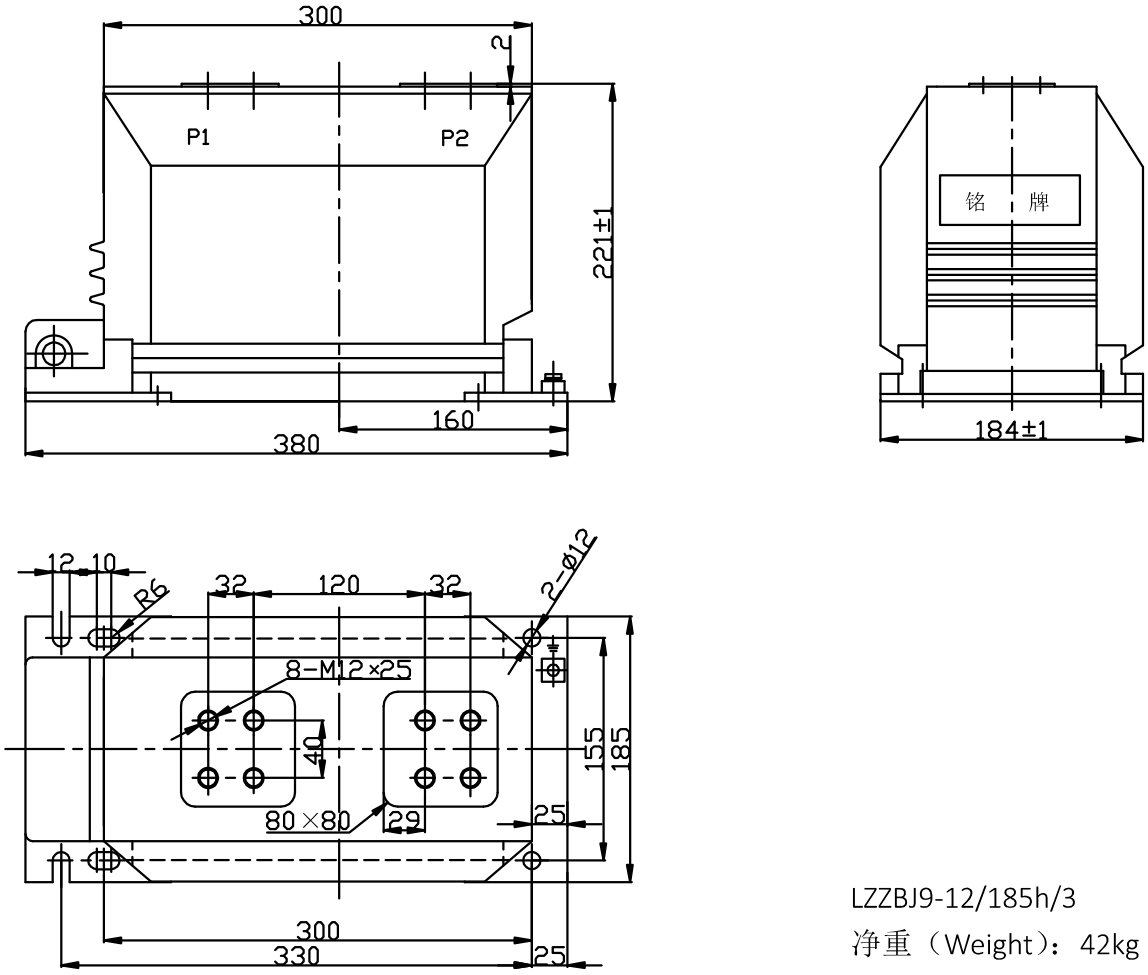

LZZBJ9-12/185h/3

净重（Weight）：42kg

LZZBJ9-12/185h/6-2 电流互感器

型号 Type	额定一次电流 Rated primary current (A)	准确级组合 Accuracy classes combination	额定输出 Rated output (VA)	额定短时热电流 Rated short-time thermal current (kA/1s)	额定动稳定电流 Rated dynamic current (kA)
LZZBJ9-12/185h/6-2	20	0.2	10, 15, 20	10	25
		0.5	10, 15, 20	10	25
		0.2S	10, 15, 20	10	25
		0.2/10P10	15/15	7	18
	25	0.2	10, 15	10	25
		0.5	10, 15	10	25
		0.2S	10, 15	10	25
		0.2/0.5	10/15	10	25
		0.2/5P10，0.5/5P10	10/15, 15/15	10	25
	30	0.2	10, 15, 20	10	25
		0.5	10, 15, 20	10	25
		0.2S	10, 15, 20	10	25
		0.2/0.2	10/10, 15/15	10	25
		0.2S/0.5	10/10, 15/15	10	25
		0.2/10P10	10/10，10/15，15/15	10	25
		0.5/10P10	10/10，10/15，15/15	10	25
		0.5/10P15	10/10	10	25
	40	0.2	10, 15, 20	10	25
		0.5	10, 15, 20	20	50
		0.2S	10, 15, 20	10	25
		0.2/0.2	10/10, 15/15	10	25
		0.2S/0.5	10/10, 15/15	10	25
		0.2/10P10，0.5/10P10	10/15, 15/15, 20/20	10	25
		0.5/10P15	10/10	10	25
	50，60	0.2	10, 15, 20	20	50
		0.5	10, 15, 20	25	63
		0.2S	10, 15, 20	20	50
		0.2/0.2，0.2S/0.2	10/10, 15/15	20	50
		0.2/0.5，0.2S/0.5	10/15, 15/15	20	50
		0.2/10P10，0.5/10P10	10/15, 15/15	20	50
		0.2/10P15，0.5/10P15	10/10, 15/15	10	25
		0.2/10P20，0.5/10P20	10/10, 15/15	10	25
		0.2/0.5/10P10	15/15/15	10	25
	75	0.2	10, 15, 20	31.5	80
		0.5	10, 15, 20	31.5	80
		0.2S	10, 15, 20	31.5	80
		0.2/0.2，0.2S/0.2	10/10, 15/15	25	63
		0.2/0.5，0.2S/0.5	10/15, 15/15	25	63
		0.2/10P10，0.5/10P10	10/15, 15/15	25	63
		0.2/10P15，0.5/10P15	10/10, 15/15	12	30
		0.2/10P20，0.5/10P20	10/10, 15/15	12	30
		0.2/0.5/10P10	15/15/15	12	30
	100	0.2	10, 15, 20	40	100
		0.5	10, 15, 20	40	100
		0.2S	10, 15, 20	40	100
		0.2/0.2, 0.2S/0.2	10/10, 15/15	40	100
		0.2/0.5, 0.2S/0.5	10/15, 15/15	40	100
		0.2/10P10, 0.5/10P10	10/15, 15/15	40	100
		0.2/10P15, 0.5/10P15	10/10, 15/15	20	50
		0.2/10P20, 0.5/10P20	10/10, 15/15	20	50
		0.2/0.5/10P10	15/15/15	20	50

型号 Type	额定一次电流 Rated primary current (A)	准确级组合 Accuracy classes combination	额定输出 Rated output (VA)	额定短时热电流 Rated short-time thermal current (kA/1s)	额定动稳定电流 Rated dynamic current (kA)
LZZBJ9-12/185h/6-2	125	0.2，0.2S，0.5	10, 15	40	100
		0.2/10P10，0.5/10P10	15/15	40	100
		0.2/10P20，0.5/10P20	15/15	20	50
	150	0.2	10, 15, 20	50	125
		0.5	10, 15, 20	50	125
		0.2S	10, 15, 20	50	125
		0.2/0.2, 0.2S/0.2	10/10, 15/15	50	125
		0.2/0.5, 0.2S/0.5	10/15, 15/15, 20/20	50	125
		0.2/10P10, 0.5/10P10	10/15, 15/15	50	125
		0.2/10P15, 0.5/10P15	10/10, 15/15	40	100
		0.2/10P20, 0.5/10P20	10/10, 15/15	25	63
		0.2/0.5/10P10	15/15/15	25	63
	200，250	0.2	10, 15, 20	50	125
		0.5	10, 15, 20	63	160
		0.2S	10, 15, 20	50	125
		0.2/0.2, 0.2S/0.2	10/10, 15/15, 20/20	50	125
		0.2/0.5, 0.2S/0.5	10/15, 15/15, 20/20	50	125
		0.2/10P10, 0.5/10P10	10/15, 15/15, 15/20	50	125
		0.2/10P15, 0.5/10P15	10/10, 15/15	31.5	80
		0.2/10P20, 0.5/10P20	10/10, 15/15	31.5	80
		0.2/0.5/10P10	15/15/15	31.5	80
	300，400	0.2	10, 15, 20, 30	63	160
		0.5	10, 15, 20, 30	63	160
		0.2S	10, 15, 20, 30	63	160
		0.2/0.2, 0.2S/0.2	10/10, 15/15, 20/20	63	160
		0.2/0.5, 0.2S/0.5	10/10, 10/15, 20/20	63	160
		0.2/10P10, 0.5/10P10	10/15, 15/15, 15/20	63	160
		0.2/10P15, 0.5/10P15	10/10, 15/15	40	100
		0.2/10P20, 0.5/10P20	10/10, 15/15	40	100
		0.2/0.5/10P10	15/15/15	40	100
	500, 600, 630	0.2	10, 15, 20, 30	63	160
		0.5	10, 15, 20, 30	63	160
		0.2S	10, 15, 20, 30	63	160
		0.2/0.2, 0.2S/0.2	10/10, 15/15, 20/20	63	160
		0.2/0.5, 0.2S/0.5	10/15, 15/15, 20/20	63	160
		0.2/10P10, 0.5/10P10	10/15, 15/15, 15/20, 30/30	63	160
		0.2/10P15, 0.5/10P15	10/10, 15/15	63	160
		0.2/10P20, 0.5/10P20	10/10, 15/15	63	160
		0.2/0.5/10P10	15/15/15, 15/15/30	63	160
		0.2/0.5/10P20	15/15/15	63	160
		0.2/10P10/10P20	15/15/15	63	160
	750, 800	0.2	10, 15, 20, 30	80	200
		0.5	10, 15, 20, 30	80	200
		0.2S	10, 15, 20, 30	80	200
		0.2/0.2, 0.2S/0.2	10/10, 15/15, 20/20	80	200
		0.2/0.5, 0.2S/0.5	10/15, 15/15, 20/20	80	200
		0.2/10P10, 0.5/10P10	10/15, 15/15, 15/20, 30/30	80	200
		0.2/10P15, 0.5/10P15	10/10, 15/15, 30/30	80	200
		0.2/10P20, 0.5/10P20	10/10, 15/15, 30/30	80	200

型号 Type	额定一次电流 Rated primary current (A)	准确级组合 Accuracy classes combination	额定输出 Rated output (VA)	额定短时热电流 Rated short-time thermal current (kA/1s)	额定动稳定电流 Rated dynamic current (kA)
LZZBJ9-12/185h/6-2	750, 800	0.2/0.5/10P10	15/15/15, 15/15/30	80	200
		0.2/0.5/10P20	15/15/15, 15/15/20	80	200
		0.2/10P10/10P20	15/15/15, 15/15/20	80	200
	1000-1250	0.2	10, 15, 20, 30	100	250
		0.5	10, 15, 20, 30	100	250
		0.2S	10, 15, 20, 30	100	250
		0.2/0.2, 0.2S/0.2	10/10, 15/15, 20/20	100	250
		0.2/0.5, 0.2S/0.5	10/15, 15/15, 20/20	100	250
		0.2/10P10, 0.5/10P10	10/15, 15/15, 15/20, 30/30	100	250
		0.2/10P15, 0.5/10P15	10/10, 15/15, 30/30	100	250
		0.2/10P20, 0.5/10P20	10/10, 15/15, 30/30	100	250
		0.2/0.5/10P10	15/15/15, 15/15/30	100	250
		0.2/0.5/10P20	15/15/15, 15/15/20	100	250
		0.2/10P10/10P20	15/15/15, 15/15/20	100	250

外形尺寸图 Overall dimensions

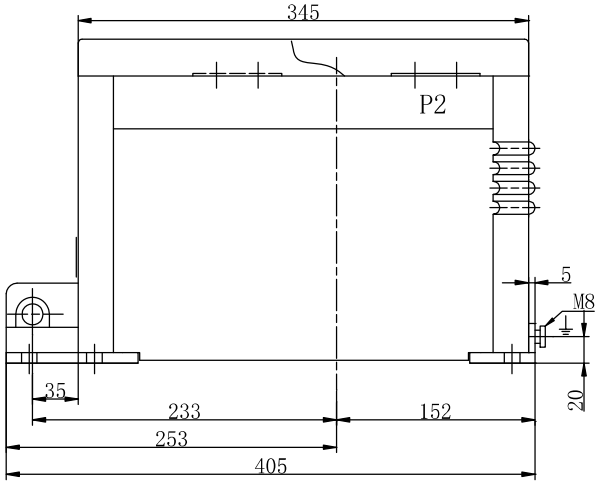

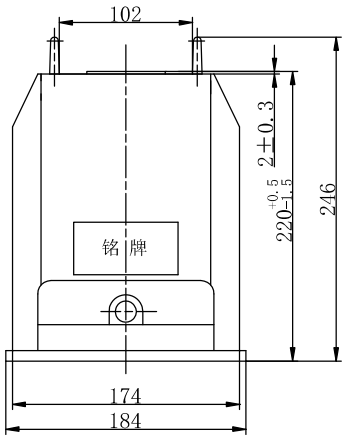

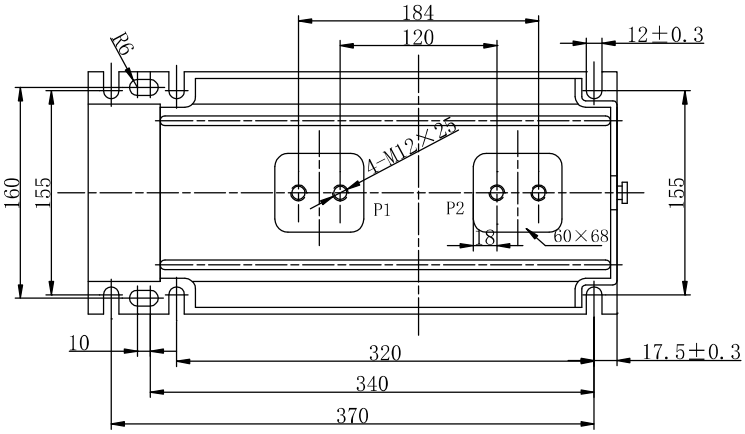

净重（Weight）：42kg

LZZBJ9-12/185h/6 电流互感器

型号 Type	额定一次电流 Rated primary current (A)	准确级组合 Accuracy classes combination	额定输出 Rated output (VA)	额定短时热电流 Rated short-time thermal current (kA/1s)	额定动稳定电流 Rated dynamic current (kA)
LZZBJ9-12/185h/6	20	0.2	10, 15, 20	10	25
		0.5	10, 15, 20	10	25
		0.2S	10, 15, 20	10	25
		0.2/10P10	15/15	7	18
	25	0.2	10, 15	10	25
		0.5	10, 15	10	25
		0.2S	10, 15	10	25
		0.2/0.5	10/15	10	25
		0.2/5P10，0.5/5P10	10/15, 15/15	10	25
	30	0.2	10, 15, 20	10	25
		0.5	10, 15, 20	10	25
		0.2S	10, 15, 20	10	25
		0.2/0.2	10/10, 15/15	10	25
		0.2S/0.5	10/10, 15/15	10	25
		0.2/10P10	10/10，10/15，15/15	10	25
		0.5/10P10	10/10，10/15，15/15	10	25
		0.5/10P15	10/10	10	25
	40	0.2	10, 15, 20	10	25
		0.5	10, 15, 20	20	50
		0.2S	10, 15, 20	10	25
		0.2/0.2	10/10, 15/15	10	25
		0.2S/0.5	10/10, 15/15	10	25
		0.2/10P10,	10/15, 15/15, 20/20	10	25
		0.5/10P15	10/10	10	25
	50，60	0.2	10, 15, 20	20	50
		0.5	10, 15, 20	25	63
		0.2S	10, 15, 20	20	50
		0.2/0.2，0.2S/0.2	10/10, 15/15	20	50
		0.2/0.5，0.2S/0.5	10/15, 15/15	20	50
		0.2/10P10,	10/15, 15/15	20	50
		0.2/10P15,	10/10, 15/15	10	25
		0.2/10P20,	10/10, 15/15	10	25
		0.2/0.5/10P10	15/15/15	10	25
	75	0.2	10, 15, 20	31.5	80
		0.5	10, 15, 20	31.5	80
		0.2S	10, 15, 20	31.5	80
		0.2/0.2，0.2S/0.2	10/10, 15/15	25	63
		0.2/0.5，0.2S/0.5	10/15, 15/15	25	63
		0.2/10P10,	10/15, 15/15	25	63
		0.2/10P15,	10/10, 15/15	12	30
		0.2/10P20,	10/10, 15/15	12	30
		0.2/0.5/10P10	15/15/15	12	30
	100	0.2	10, 15, 20	40	100

型号 Type	额定一次电流 Rated primary current (A)	准确级组合 Accuracy classes combination	额定输出 Rated output (VA)	额定短时热电流 Rated short-time thermal current (kA/1s)	额定动稳定电流 Rated dynamic current (kA)
LZZBJ9-12/185h/6	100	0.5	10, 15, 20	40	100
		0.2S	10, 15, 20	40	100
		0.2/0.2, 0.2S/0.2	10/10, 15/15	40	100
		0.2/0.5, 0.2S/0.5	10/15, 15/15	40	100
		0.2/10P10, 0.5/10P10	10/15, 15/15	40	100
		0.2/10P15, 0.5/10P15	10/10, 15/15	20	50
		0.2/10P20, 0.5/10P20	10/10, 15/15	20	50
		0.2/0.5/10P10	15/15/15	20	50
	125	0.2，0.2S，0.5	10, 15	40	100
		0.2/10P10，0.5/10P10	15/15	40	100
		0.2/10P20，0.5/10P20	15/15	20	50
	150	0.2	10, 15, 20	50	125
		0.5	10, 15, 20	50	125
		0.2S	10, 15, 20	50	125
		0.2/0.2, 0.2S/0.2	10/10, 15/15	50	125
		0.2/0.5, 0.2S/0.5	10/15, 15/15, 20/20	50	125
		0.2/10P10, 0.5/10P10	10/15, 15/15	50	125
		0.2/10P15, 0.5/10P15	10/10, 15/15	40	100
		0.2/10P20, 0.5/10P20	10/10, 15/15	25	63
		0.2/0.5/10P10	15/15/15	25	63
	200，250	0.2	10, 15, 20	50	125
		0.5	10, 15, 20	63	160
		0.2S	10, 15, 20	50	125
		0.2/0.2, 0.2S/0.2	10/10, 15/15, 20/20	50	125
		0.2/0.5, 0.2S/0.5	10/15, 15/15, 20/20	50	125
		0.2/10P10, 0.5/10P10	10/15, 15/15, 15/20	50	125
		0.2/10P15, 0.5/10P15	10/10, 15/15	31.5	80
		0.2/10P20, 0.5/10P20	10/10, 15/15	31.5	80
		0.2/0.5/10P10	15/15/15	31.5	80
	300，400	0.2	10, 15, 20, 30	63	160
		0.5	10, 15, 20, 30	63	160
		0.2S	10, 15, 20, 30	63	160
		0.2/0.2, 0.2S/0.2	10/10, 15/15, 20/20	63	160
		0.2/0.5, 0.2S/0.5	10/10, 10/15, 20/20	63	160
		0.2/10P10, 0.5/10P10	10/15, 15/15, 15/20	63	160
		0.2/10P15, 0.5/10P15	10/10, 15/15	40	100
		0.2/10P20, 0.5/10P20	10/10, 15/15	40	100
		0.2/0.5/10P10	15/15/15	40	100
	500, 600, 630	0.2	10, 15, 20, 30	63	160
		0.5	10, 15, 20, 30	63	160
		0.2S	10, 15, 20, 30	63	160
		0.2/0.2, 0.2S/0.2	10/10, 15/15, 20/20	63	160
		0.2/0.5, 0.2S/0.5	10/15, 15/15, 20/20	63	160
		0.2/10P10, 0.5/10P10	10/15, 15/15, 15/20, 30/30	63	160
		0.2/10P15, 0.5/10P15	10/10, 15/15	63	160
		0.2/10P20, 0.5/10P20	10/10, 15/15	63	160
		0.2/0.5/10P10	15/15/15, 15/15/30	63	160

型号 Type	额定一次电流 Rated primary current (A)	准确级组合 Accuracy classes combination	额定输出 Rated output (VA)	额定短时热电流 Rated short-time thermal current (kA/1s)	额定动稳定电流 Rated dynamic current (kA)
LZZBJ9-12/185h/6	500, 600, 630	0.2/0.5/10P10	15/15/15	12	30
		0.2	10, 15, 20	40	100
	750, 800	0.2	10, 15, 20, 30	80	200
		0.5	10, 15, 20, 30	80	200
		0.2S	10, 15, 20, 30	80	200
		0.2/0.2, 0.2S/0.2	10/10, 15/15, 20/20	80	200
		0.2/0.5, 0.2S/0.5	10/15, 15/15, 20/20	80	200
		0.2/10P10, 0.5/10P10	10/15, 15/15, 15/20, 30/30	80	200
		0.2/10P15, 0.5/10P15	10/10, 15/15, 30/30	80	200
		0.2/10P20, 0.5/10P20	10/10, 15/15, 30/30	80	200
		0.2/0.5/10P10	15/15/15, 15/15/30	80	200
		0.2/0.5/10P20	15/15/15, 15/15/20	80	200
		0.2/10P10/10P20	15/15/15, 15/15/20	80	200
	1000-2000	0.2	10, 15, 20, 30	100	250
		0.5	10, 15, 20, 30	100	250
		0.2S	10, 15, 20, 30	100	250
		0.2/0.2, 0.2S/0.2	10/10, 15/15, 20/20	100	250
		0.2/0.5, 0.2S/0.5	10/15, 15/15, 20/20	100	250
		0.2/10P10, 0.5/10P10	10/15, 15/15, 15/20, 30/30	100	250
		0.2/10P15, 0.5/10P15	10/10, 15/15, 30/30	100	250
		0.2/10P20, 0.5/10P20	10/10, 15/15, 30/30	100	250
		0.2/0.5/10P10	15/15/15, 15/15/30	100	250
		0.2/0.5/10P20	15/15/15, 15/15/20	100	250
		0.2/10P10/10P20	15/15/15, 15/15/20	100	250
	2500-3150	0.2	10, 15, 20, 30	100	250
		0.5	10, 15, 20, 30	100	250
		0.2S	10, 15, 20, 30	100	250
		0.2/0.2, 0.2S/0.2	10/10, 15/15, 20/20	100	250
		0.2/0.5, 0.2S/0.5	10/15, 15/15, 20/20	100	250
		0.2/10P10, 0.5/10P10	10/15, 15/15, 15/20, 30/30	100	250
		0.2/10P15, 0.5/10P15	10/10, 15/15, 20/20	100	250
		0.2/10P20, 0.5/10P20	10/10, 15/15	100	250
		0.2/0.5/10P10	15/15/15	100	250

外形尺寸图 Overall dimensions

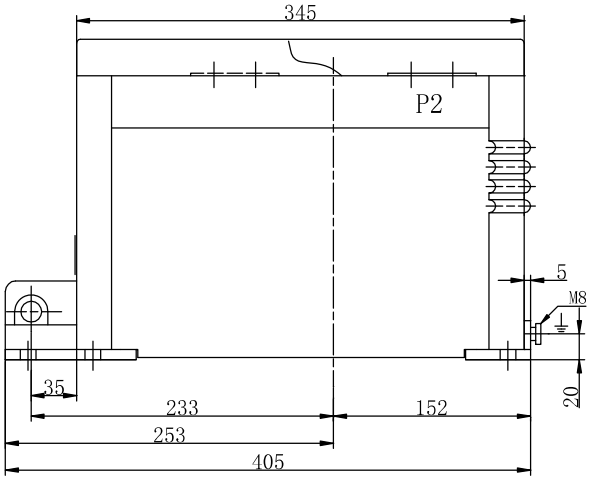

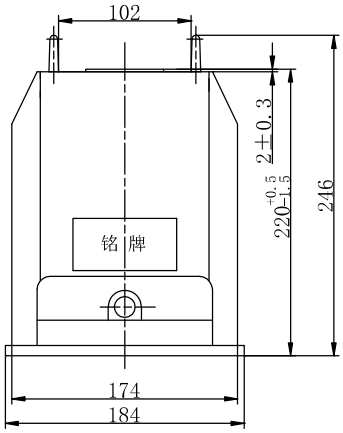

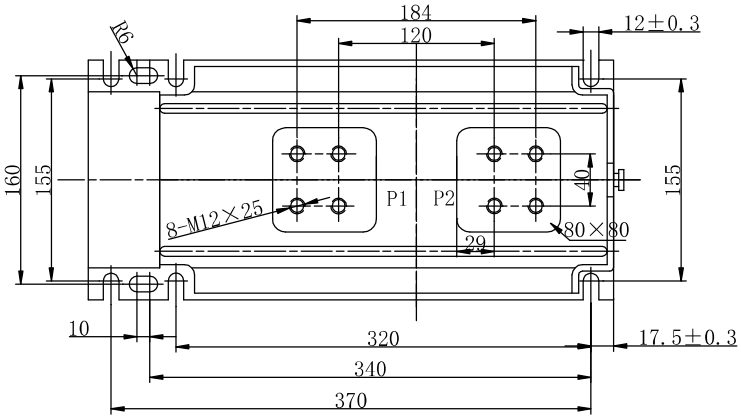

净重（Weight）：48kg

LZZBJ9-12/185h（s）/4-2, LZZBJ13-10Q 电流互感器

日	额定一次电流 Rated primary current (A)	准确级组合 Accuracy classes combination	额定输出 Rated output (VA)	额定短时热电流 Rated short-time thermal current (kA/1s)	额定动稳定电流 Rated dynamic current (kA)
LZZBJ9-12/185h（s）/4-2 LZZBJ13-10Q	20	0.2	10, 15, 20, 30	10	25
		0.5	10, 15, 20, 30	10	25
		0.2S	10, 15, 20, 30	10	25
		0.2/10P10	15/15, 15/20	10	25
	25	0.2	10, 15, 20, 30	10	25
		0.5	10, 15, 20, 30	10	25
		0.2S	10, 15, 20, 30	10	25
		0.2/0.5	10/15, 20/20	10	25
		0.2/5P10, 0.5/5P10	10/15, 15/15, 15/20	10	25
	30	0.2	10, 15, 20, 30	10	25
		0.5	10, 15, 20, 30	10	25
		0.2S	10, 15, 20, 30	10	25
		0.2/0.2	10/10, 15/15, 20/20	10	25
		0.2S/0.5	10/10, 15/15, 20/20	10	25
		0.2/10P10	10/10, 10/15, 15/15, 20/20	10	25
		0.5/10P10	10/10, 10/15, 15/15, 20/20	10	25
		0.5/10P15	10/10, 15/15	10	25
	40	0.2	10, 15, 20, 30	10	25
		0.5	10, 15, 20, 30	20	50
		0.2S	10, 15, 20, 30	10	25
		0.2/0.2	10/10, 15/15, 20/20	10	25
		0.2S/0.5	10/10, 15/15, 20/20	10	25
		0.2/10P10, 0.5/10P10	10/15, 15/15, 20/20	10	25
		0.5/10P15	10/10, 15/15, 15/20	10	25
	50, 60	0.2	10, 15, 20, 30	20	50
		0.5	10, 15, 20, 30	25	63
		0.2S	10, 15, 20, 30	20	50
		0.2/0.2, 0.2S/0.2	10/10, 15/15, 20/20	20	50
		0.2/0.5, 0.2S/0.5	10/15, 15/15, 20/20	20	50
		0.2/10P10, 0.5/10P10	10/15, 15/15, 20/20	20	50
		0.2/10P15, 0.5/10P15	10/10, 15/15	20	50
		0.2/10P20, 0.5/10P20	10/10, 15/15	20	50
		0.2/0.5/10P10	15/15/15	20	50
	75	0.2	10, 15, 20, 30	31.5	80
		0.5	10, 15, 20, 30	31.5	80
		0.2S	10, 15, 20, 30	31.5	80
		0.2/0.2, 0.2S/0.2	10/10, 15/15, 20/20	31.5	80
		0.2/0.5, 0.2S/0.5	10/15, 15/15, 20/20	31.5	80
		0.2/10P10, 0.5/10P10	10/15, 15/15, 15/20	31.5	80
		0.2/10P15, 0.5/10P15	10/10, 15/15	25	63
		0.2/10P20, 0.5/10P20	10/10, 15/15	25	63
		0.5/10P20	20/20	15	38
		0.2/0.5/10P10	15/15/15	25	63
		0.2/0.5/10P20	15/15/15	15	38
	100	0.2	10, 15, 20, 30	40	100
		0.5	10, 15, 20, 30	40	100
		0.2S	10, 15, 20, 30	40	100
		0.2/0.2, 0.2S/0.2	10/10, 15/15, 20/20	40	100
		0.2/0.5, 0.2S/0.5	10/15, 15/15, 20/20	40	100
		0.2/10P10, 0.5/10P10	10/15, 15/15, 15/20	40	100
		0.2/10P15, 0.5/10P15	10/10, 15/15	40	100

型号 Type	额定一次电流 Rated primary current (A)	准确级组合 Accuracy classes combination	额定输出 Rated output (VA)	额定短时热电流 Rated short-time thermal current (kA/1s)	额定动稳定电流 Rated dynamic current (kA)
LZZBJ9-12/185h（s）/4-2 LZZBJ13-10Q	100	0.2/10P20, 0.5/10P20	10/10, 15/15	40	100
		0.2/0.5/10P10	15/15/15	40	100
		0.5/10P20	20/20	20	50
		0.2/0.5/10P20	15/15/15	20	50
	125	0.2, 0.2S, 0.5	10, 15	40	100
		0.2/10P10, 0.5/10P10	15/15	40	100
		0.2/10P20, 0.5/10P20	15/15	25	63
	150	0.2	10, 15, 20, 30	40	100
		0.5	10, 15, 20, 30	40	100
		0.2S	10, 15, 20, 30	40	100
		0.2/0.2, 0.2S/0.2	10/10, 15/15, 20/20	40	100
		0.2/0.5, 0.2S/0.5	10/15, 15/15, 20/20	40	100
		0.2/10P10, 0.5/10P10	10/15, 15/15, 15/20	40	100
		0.2/10P15, 0.5/10P15	10/10, 15/15	40	100
		0.2/10P20, 0.5/10P20	10/10, 15/15	40	100
		0.2/0.5/10P10	15/15/15	40	100
		0.5/10P20	20/20	25	63
		0.2/0.5/10P20	15/15/15	25	63
	200，250	0.2	10, 15, 20, 30	40	100
		0.5	10, 15, 20, 30	63	160
		0.2S	10, 15, 20, 30	40	100
		0.2/0.2, 0.2S/0.2	10/10, 15/15, 20/20	40	100
		0.2/0.5, 0.2S/0.5	10/15, 15/15, 20/20	40	100
		0.2/10P10, 0.5/10P10	10/15, 15/15, 15/20	40	100
		0.2/10P15, 0.5/10P15	10/10, 15/15	40	100
		0.2/10P20, 0.5/10P20	10/10, 15/15	40	100
		0.2/0.5/10P10	15/15/15	40	100
		0.5/10P20	20/20	31.5	80
		0.2/0.5/10P20	15/15/15	31.5	80
	300, 400	0.2	10, 15, 20, 30	63	160
		0.5	10, 15, 20, 30	63	160
		0.2S	10, 15, 20, 30	63	160
		0.2/0.2, 0.2S/0.2	10/10, 15/15, 20/20	63	160
		0.2/0.5, 0.2S/0.5	10/15, 15/15, 20/20	63	160
		0.2/10P10, 0.5/10P10	10/15, 15/15, 15/20	63	160
		0.2/10P15, 0.5/10P15	10/10, 15/15	63	160
		0.2/10P20, 0.5/10P20	10/10, 15/15	63	160
		0.2/0.5/10P10	15/15/15	63	160
		0.5/10P20	20/20	40	100
		0.2/0.5/10P20	15/15/15, 15/15/20	40	100
		0.2/10P10/10P20	15/15/20	40	100
		0.2/0.5/10P10/10P10	15/15/20/20	40	100
	500, 600, 630	0.2	10, 15, 20, 30	63	160
		0.5	10, 15, 20, 30	63	160
		0.2S	10, 15, 20, 30	63	160
		0.2/0.2, 0.2S/0.2	10/10, 15/15, 20/20	63	160
		0.2/0.5, 0.2S/0.5	10/15, 15/15, 20/20	63	160
		0.2/10P10, 0.5/10P10	10/15, 15/15, 15/20, 30/30	63	160
		0.2/10P15, 0.5/10P15	10/10, 15/15, 30/30	63	160
		0.2/10P20, 0.5/10P20	10/10, 15/15, 30/30	63	160
		0.2/0.5/10P10	15/15/15, 15/15/30	63	160
		0.2/0.5/10P20	15/15/15, 15/15/30	63	160

型号 Type	额定一次电流 Rated primary current (A)	准确级组合 Accuracy classes combination	额定输出 Rated output (VA)	额定短时热电流 Rated short-time thermal current (kA/1s)	额定动稳定电流 Rated dynamic current (kA)
LZZBJ9-12/185h（s）/4-2 LZZBJ13-10Q	500, 600, 630	0.2/10P10/10P20	15/15/15, 15/15/30	63	160
		0.2/0.5/10P10/10P20	15/15/15/20	63	160
	750, 800	0.2	10, 15, 20, 30	80	200
		0.5	10, 15, 20, 30	80	200
		0.2S	10, 15, 20, 30	80	200
		0.2/0.2, 0.2S/0.2	10/10, 15/15, 20/20	80	200
		0.2/0.5, 0.2S/0.5	10/15, 15/15, 20/20	80	200
		0.2/10P10, 0.5/10P10	10/15, 15/15, 15/20, 30/30	80	200
		0.2/10P15, 0.5/10P15	10/10, 15/15, 30/30	80	200
		0.2/10P20, 0.5/10P20	10/10, 15/15, 30/30	80	200
		0.2/0.5/10P10	15/15/15, 15/15/30	80	200
		0.2/0.5/10P20	15/15/15, 15/15/30	80	200
		0.2/10P10/10P20	15/15/15, 15/15/30	80	200
		0.2/0.5/10P10/10P20	15/15/15/30	80	200
		0.2/0.5/10P20/10P20	15/15/20/20	80	200
	1000, 1200, 1250	0.2	10, 15, 20, 30	100	250
		0.5	10, 15, 20, 30	100	250
		0.2S	10, 15, 20, 30	100	250
		0.2/0.2, 0.2S/0.2	10/10, 15/15, 20/20	100	250
		0.2/0.5, 0.2S/0.5	10/15, 15/15, 20/20	100	250
		0.2/10P10, 0.5/10P10	10/15, 15/15, 15/20, 30/30	100	250
		0.2/10P15, 0.5/10P15	10/10, 15/15, 30/30	100	250
		0.2/10P20, 0.5/10P20	10/10, 15/15, 30/30	100	250
		0.2/0.5/10P10	15/15/15, 15/15/30	100	250
		0.2/0.5/10P20	15/15/15, 15/15/30	100	250
		0.2/10P10/10P20	15/15/15, 15/15/30	100	250
		0.2/0.5/10P10/10P20	15/15/30/30	100	250
		0.2/0.5/10P20/10P20	15/15/20/20	100	250

外形尺寸图

Overall dimensions

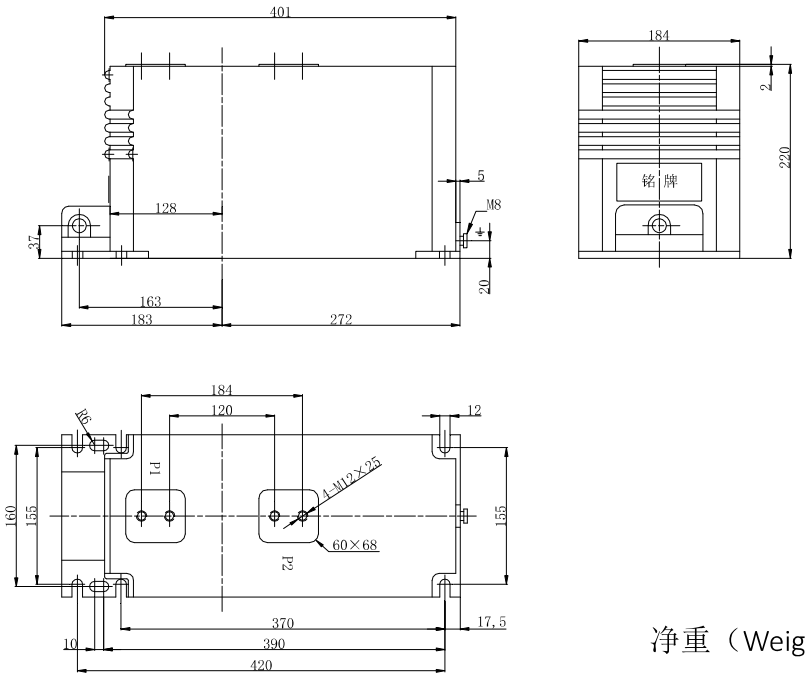

净重（Weight）：40.5kg

LZZBJ9-12/185h/4-2
LZZBJ13-10Q

二次多端子时外形图

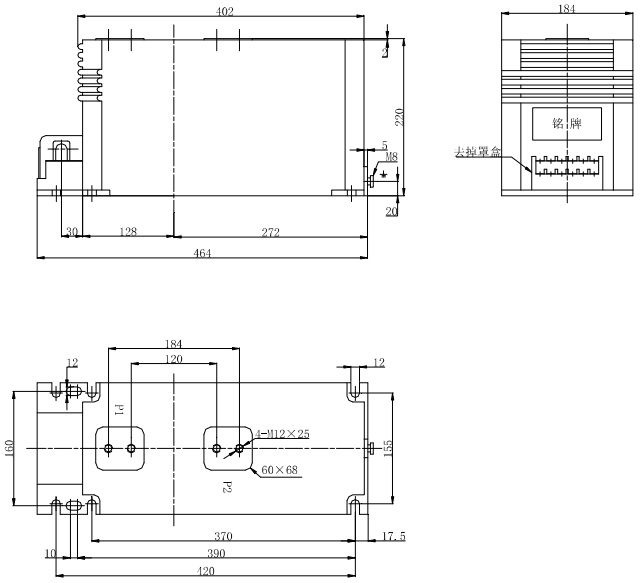

LZZBJ9-12/185s/4-2
LZZBJ13-10Q

净重（Weight）：40.5kg

LZZBJ9-12/185h(s)/4, LZZBJ13-10Q 电流互感器

型号 Type	额定一次电流 Rated primary current (A)	准确级组合 Accuracy classes combination	额定输出 Rated output (VA)	额定短时热电流 Rated short-time thermal current (kA/1s)	额定动稳定电流 Rated dynamic current (kA)
LZZBJ9-12/185h(s)/4 LZZBJ13-10Q	20	0.2	10, 15, 20, 30	10	25
		0.5	10, 15, 20, 30	10	25
		0.2S	10, 15, 20, 30	10	25
		0.2/10P10	15/15, 15/20	10	25
	25	0.2	10, 15, 20, 30	10	25
		0.5	10, 15, 20, 30	10	25
		0.2S	10, 15, 20, 30	10	25
		0.2/0.5	10/15, 20/20	10	25
		0.2/5P10, 0.5/5P10	10/15, 15/15, 15/20	10	25
	30	0.2	10, 15, 20, 30	10	25
		0.5	10, 15, 20, 30	10	25
		0.2S	10, 15, 20, 30	10	25
		0.2/0.2	10/10, 15/15, 20/20	10	25
		0.2S/0.5	10/10, 15/15, 20/20	10	25
		0.2/10P10	10/10, 10/15, 15/15, 20/20	10	25
		0.5/10P10	10/10, 10/15, 15/15, 20/20	10	25
		0.5/10P15	10/10, 15/15	10	25
	40	0.2	10, 15, 20, 30	10	25
		0.5	10, 15, 20, 30	20	50
		0.2S	10, 15, 20, 30	10	25
		0.2/0.2	10/10, 15/15, 20/20	10	25
		0.2S/0.5	10/10, 15/15, 20/20	10	25
		0.2/10P10, 0.5/10P10	10/15, 15/15, 20/20	10	25
		0.5/10P15	10/10, 15/15, 15/20	10	25
	50, 60	0.2	10, 15, 20, 30	20	50
		0.5	10, 15, 20, 30	25	63
		0.2S	10, 15, 20, 30	20	50
		0.2/0.2, 0.2S/0.2	10/10, 15/15, 20/20	20	50
		0.2/0.5, 0.2S/0.5	10/15, 15/15, 20/20	20	50
		0.5/10P10	5/5	50	125
		0.2/10P10, 0.5/10P10	10/15, 15/15, 20/20	20	50
		0.2/10P15, 0.5/10P15	10/10, 15/15	20	50
		0.2/10P20, 0.5/10P20	10/10, 15/15	20	50
		0.2/0.5/10P10	15/15/15	20	50
	75	0.2	10, 15, 20, 30	31.5	80
		0.5	10, 15, 20, 30	31.5	80
		0.2S	10, 15, 20, 30	31.5	80
		0.2/0.2, 0.2S/0.2	10/10, 15/15, 20/20	31.5	80
		0.2/0.5, 0.2S/0.5	10/15, 15/15, 20/20	31.5	80
		0.5/10P10	5/5	50	125
		0.2/10P10, 0.5/10P10	10/15, 15/15, 15/20	31.5	80
		0.2/10P15, 0.5/10P15	10/10, 15/15	25	63
		0.2/10P20, 0.5/10P20	10/10, 15/15	25	63
		0.5/10P20	20/20	15	38
		0.2/0.5/10P10	15/15/15	25	63
		0.2/0.5/10P20	15/15/15	15	38
	100	0.2	10, 15, 20, 30	40	100
		0.5	10, 15, 20, 30	40	100
		0.2S	10, 15, 20, 30	40	100
		0.2/0.2, 0.2S/0.2	10/10, 15/15, 20/20	40	100
		0.2/0.5, 0.2S/0.5	10/15, 15/15, 20/20	40	100

型号 Type	额定一次电流 Rated primary current (A)	准确级组合 Accuracy classes combination	额定输出 Rated output (VA)	额定短时热电流 Rated short-time thermal current (kA/1s)	额定动稳定电流 Rated dynamic current (kA)
LZZBJ9-12/185h(s)/4 LZZBJ13-10Q	100	0.5/10P10	7.5/7.5	50	125
		0.2/10P10, 0.5/10P10	10/15, 15/15, 15/20	40	100
		0.2/10P15, 0.5/10P15	10/10, 15/15	40	100
		0.2/10P20, 0.5/10P20	10/10, 15/15	40	100
		0.2/0.5/10P10	15/15/15	40	100
		0.5/10P20	20/20	20	50
		0.2/0.5/10P20	15/15/15	20	50
	125	0.2, 0.2S, 0.5	10, 15	40	100
		0.2/10P10, 0.5/10P10	15/15	40	100
		0.2/10P20, 0.5/10P20	15/15	25	63
	150	0.2	10, 15, 20, 30	50	125
		0.5	10, 15, 20, 30	50	125
		0.2S	10, 15, 20, 30	50	125
		0.2/0.2, 0.2S/0.2	10/10, 15/15, 20/20	50	125
		0.2/0.5, 0.2S/0.5	10/15, 15/15, 20/20	50	125
		0.5/10P10	7.5/7.5	50	125
		0.2/10P10, 0.5/10P10	10/15, 15/15, 15/20	50	125
		0.2/10P15, 0.5/10P15	10/10, 15/15	40	100
		0.2/10P20, 0.5/10P20	10/10, 15/15	40	100
		0.2/0.5/10P10	15/15/15	50	125
		0.5/10P20	20/20	25	63
		0.2/0.5/10P20	15/15/15	25	63
	200，250	0.2	10, 15, 20, 30	50	125
		0.5	10, 15, 20, 30	50	125
		0.2S	10, 15, 20, 30	50	125
		0.2/0.2, 0.2S/0.2	10/10, 15/15, 20/20	50	125
		0.2/0.5, 0.2S/0.5	10/15, 15/15, 20/20	50	125
		0.5/10P10	10/10	50	125
		0.2/10P10, 0.5/10P10	10/15, 15/15, 15/20	50	125
		0.2/10P15, 0.5/10P15	10/10, 15/15	40	100
		0.2/10P20, 0.5/10P20	10/10, 15/15	40	100
		0.2/0.5/10P10	15/15/15	50	125
		0.5/10P20	20/20	31.5	80
		0.2/0.5/10P20	15/15/15	31.5	80
	300, 400	0.2	10, 15, 20, 30	63	160
		0.5	10, 15, 20, 30	63	160
		0.2S	10, 15, 20, 30	63	160
		0.2/0.2, 0.2S/0.2	10/10, 15/15, 20/20	63	160
		0.2/0.5, 0.2S/0.5	10/15, 15/15, 20/20	63	160
		0.2/10P10, 0.5/10P10	10/15, 15/15, 15/20	63	160
		0.2/10P15, 0.5/10P15	10/10, 15/15	63	160
		0.2/10P20, 0.5/10P20	10/10, 15/15	63	160
		0.2/0.5/10P10	15/15/15	63	160
		0.5/10P20	20/20	40	100
		0.2/0.5/10P20	15/15/15, 15/15/20	40	100
		0.2/10P10/10P20	15/15/20	40	100
		0.2/0.5/10P10/10P10	15/15/20/20	40	100
	500, 600, 630	0.2	10, 15, 20, 30	63	160
		0.5	10, 15, 20, 30	63	160
		0.2S	10, 15, 20, 30	63	160
		0.2/0.2, 0.2S/0.2	10/10, 15/15, 20/20	63	160
		0.2/0.5, 0.2S/0.5	10/15, 15/15, 20/20	63	160

型号 Type	额定一次电流 Rated primary current (A)	准确级组合 Accuracy classes combination	额定输出 Rated output (VA)	额定短时热电流 Rated short-time thermal current (kA/1s)	额定动稳定电流 Rated dynamic current (kA)
LZZBJ9-12/185h(s)/4 LZZBJ13-10Q	500, 600, 630	0.2/10P10, 0.5/10P10	10/15, 15/15, 15/20, 30/30	63	160
		0.2/10P15, 0.5/10P15	10/10, 15/15, 30/30	63	160
		0.2/10P20, 0.5/10P20	10/10, 15/15, 30/30	63	160
		0.2/0.5/10P10	15/15/15, 15/15/30	63	160
		0.2/0.5/10P20	15/15/15, 15/15/30	63	160
		0.2/10P10/10P20	15/15/15, 15/15/30	63	160
		0.2/0.5/10P10/10P20	15/15/15/20	63	160
	750, 800	0.2	10, 15, 20, 30	80	200
		0.5	10, 15, 20, 30	80	200
		0.2S	10, 15, 20, 30	80	200
		0.2/0.2, 0.2S/0.2	10/10, 15/15, 20/20	80	200
		0.2/0.5, 0.2S/0.5	10/15, 15/15, 20/20	80	200
		0.2/10P10, 0.5/10P10	10/15, 15/15, 15/20, 30/30	80	200
		0.2/10P15, 0.5/10P15	10/10, 15/15, 30/30	80	200
		0.2/10P20, 0.5/10P20	10/10, 15/15, 30/30	80	200
		0.2/0.5/10P10	15/15/15, 15/15/30	80	200
		0.2/0.5/10P20	15/15/15, 15/15/30	80	200
		0.2/10P10/10P20	15/15/15, 15/15/30	80	200
		0.2/0.5/10P10/10P20	15/15/15/30	80	200
		0.2/0.5/10P20/10P20	15/15/20/20	80	200
	1000-2000	0.2	10, 15, 20, 30	100	250
		0.5	10, 15, 20, 30	100	250
		0.2S	10, 15, 20, 30	100	250
		0.2/0.2, 0.2S/0.2	10/10, 15/15, 20/20	100	250
		0.2/0.5, 0.2S/0.5	10/15, 15/15, 20/20	100	250
		0.2/10P10, 0.5/10P10	10/15, 15/15, 15/20, 30/30	100	250
		0.2/10P15, 0.5/10P15	10/10, 15/15, 30/30	100	250
		0.2/10P20, 0.5/10P20	10/10, 15/15, 30/30	100	250
		0.2/0.5/10P10	15/15/15, 15/15/30	100	250
		0.2/0.5/10P20	15/15/15, 15/15/30	100	250
		0.2/10P10/10P20	15/15/15, 15/30/30	100	250
		0.5/10P20/10P20	15/30/30	100	250
		0.2/0.5/10P10/10P20	15/15/30/30	100	250
		0.2/0.5/10P20/10P20	15/15/20/20	100	250
	2500-3150	0.2	10, 15, 20, 30	100	250
		0.5	10, 15, 20, 30	100	250
		0.2S	10, 15, 20, 30	100	250
		0.2/0.2, 0.2S/0.2	10/10, 15/15, 20/20	100	250
		0.2/0.5, 0.2S/0.5	10/15, 15/15, 20/20	100	250
		0.2/10P10, 0.5/10P10	10/15, 15/15, 15/20, 30/30	100	250
		0.2/10P15, 0.5/10P15	10/10, 15/15, 30/30	100	250
		0.2/10P20, 0.5/10P20	10/10, 15/15, 30/30	100	250
		0.2/0.5/10P10	15/15/15, 15/15/30	100	250
		0.2/0.5/10P20	15/15/15, 15/15/30	100	250
		0.2/10P20/10P20	15/15/15, 15/25/25	100	250
		0.2/0.5/10P10/10P20	15/15/15/20	100	250
		0.2/0.5/10P20/10P20	15/15/15/15	100	250

外形尺寸图
Overall dimensions

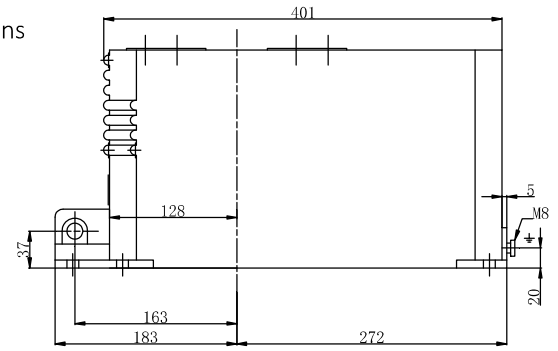

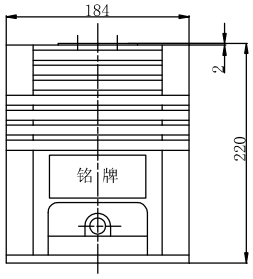

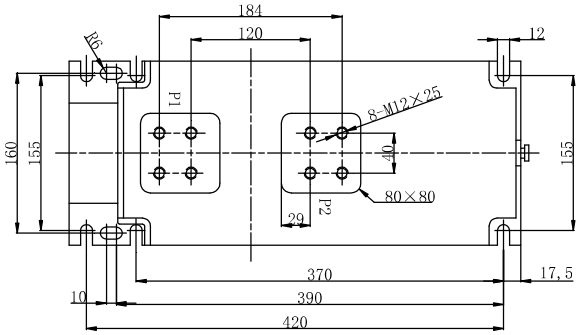

净重（Weight）：50kg

LZZBJ9-12/185h/4
LZZBJ13-10Q

二次多端子时外形图

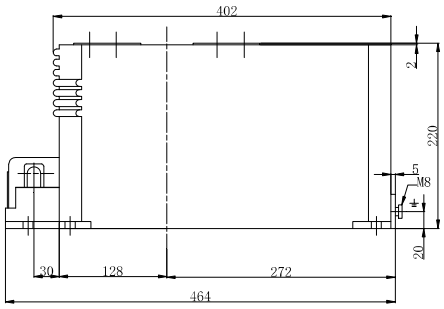

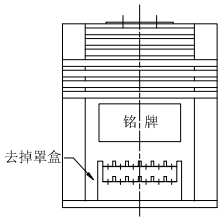

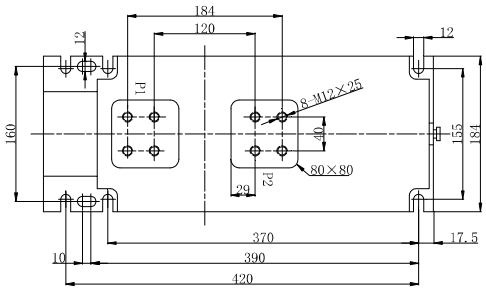

LZZBJ9-12/185s/4
LZZBJ13-10Q

净重（Weight）：50kg

LZZBJ9-12/185h(s)/5-2 电流互感器

型号 Type	额定一次电流 Rated primary current (A)	准确级组合 Accuracy classes combination	额定输出 Rated output (VA)	额定短时热电流 Rated short-time thermal current (kA/1s)	额定动稳定电流 Rated dynamic current (kA)
LZZBJ9-12/185h(s)/5-2	20	0.2	10, 15, 20, 30	10	25
		0.5	10, 15, 20, 30	10	25
		0.2S	10, 15, 20, 30	10	25
		0.2/10P15	15/15	10	25
	25	0.2	10, 15, 20, 30	10	25
		0.5	10, 15, 20, 30	10	25
		0.2S	10, 15, 20, 30	10	25
		0.2/0.5	10/15, 20/20	10	25
		0.2/5P15, 0.5/5P15	10/15, 15/15	10	25
	30	0.2	10, 15, 20, 30	10	25
		0.5	10, 15, 20, 30	10	25
		0.2S	10, 15, 20, 30	10	25
		0.2/0.2	10/10, 15/15, 20/20	10	25
		0.2S/0.5	10/10, 15/15, 20/20	10	25
		0.2/10P10	10/10, 10/15, 15/15, 20/20	10	25
		0.5/10P10	10/10, 10/15, 15/15, 20/20	10	25
		0.5/10P15	10/10, 15/15	10	25
	40	0.2	10, 15, 20, 30	10	25
		0.5	10, 15, 20, 30	20	50
		0.2S	10, 15, 20, 30	10	25
		0.2/0.2	10/10, 15/15, 20/20	10	25
		0.2S/0.5	10/10, 15/15, 20/20	10	25
		0.2/10P10, 0.5/10P10	10/15, 15/15, 20/20	10	25
		0.5/10P15	10/10, 15/15, 15/20	10	25
	50, 60	0.2	10, 15, 20, 30	20	50
		0.5	10, 15, 20, 30	25	63
		0.2S	10, 15, 20, 30	20	50
		0.2/0.2, 0.2S/0.2	10/10, 15/15, 20/20	20	50
		0.2/0.5, 0.2S/0.5	10/15, 15/15, 20/20	20	50
		0.2/10P10, 0.5/10P10	10/15, 15/15, 20/20	20	50
		0.2/10P15, 0.5/10P15	10/10, 15/15	20	50
		0.2/10P20, 0.5/10P20	10/10, 15/15	20	50
		0.2/0.5/10P10	15/15/15	20	50
	75	0.2	10, 15, 20, 30	31.5	80
		0.5	10, 15, 20, 30	31.5	80
		0.2S	10, 15, 20, 30	31.5	80
		0.2/0.2, 0.2S/0.2	10/10, 15/15, 20/20	31.5	80
		0.2/0.5, 0.2S/0.5	10/15, 15/15, 20/20	31.5	80
		0.2/10P10, 0.5/10P10	10/15, 15/15, 15/20	31.5	80
		0.2/10P15, 0.5/10P15	10/10, 15/15	25	63
		0.2/10P20, 0.5/10P20	10/10, 15/15	25	63
		0.5/10P20	20/20	15	38
		0.2/0.5/10P10	15/15/15	25	63
	100	0.2	10, 15, 20, 30	40	100
		0.5	10, 15, 20, 30	40	100

型号 Type	额定一次电流 Rated primary current (A)	准确级组合 Accuracy classes combination	额定输出 Rated output (VA)	额定短时热电流 Rated short-time thermal current (kA/1s)	额定动稳定电流 Rated dynamic current (kA)
LZZBJ9-12/185h(s)/5-2	100	0.2S	10, 15, 20, 30	40	100
		0.2/0.2, 0.2S/0.2	10/10, 15/15, 20/20	40	100
		0.2/0.5, 0.2S/0.5	10/15, 15/15, 20/20	40	100
		0.2/10P10, 0.5/10P10	10/15, 15/15, 15/20	40	100
		0.2/10P15, 0.5/10P15	10/10, 15/15	40	100
		0.2/10P20, 0.5/10P20	10/10, 15/15	40	100
	125	0.2/0.5/10P10	15/15/15	40	100
		0.5/10P20	20/20	20	50
		0.2/0.5/10P20	15/15/15	20	50
		0.2, 0.2S, 0.5	10, 15	40	100
	125 150	0.2/10P10, 0.5/10P10	15/15	40	100
		0.2/10P20, 0.5/10P20	15/15	25	63
		0.2	10, 15, 20, 30	40	100
	150 200，250	0.5	10, 15, 20, 30	40	100
		0.2S	10, 15, 20, 30	40	100
		0.2/0.2, 0.2S/0.2	10/10, 15/15, 20/20	40	100
		0.2/0.5, 0.2S/0.5	10/15, 15/15, 20/20	40	100
		0.2/10P10, 0.5/10P10	10/15, 15/15, 15/20	40	100
		0.2/10P15, 0.5/10P15	10/10, 15/15	40	100
		0.2/10P20, 0.5/10P20	10/10, 15/15	40	100
		0.2/0.5/10P10	15/15/15	40	100
		0.5/10P20	20/20	25	63
		0.2/0.5/10P20	15/15/15	25	63
		0.2	10, 15, 20, 30	40	100
	200，250 300, 400	0.5	10, 15, 20, 30	63	160
		0.2S	10, 15, 20, 30	40	100
		0.2/0.2, 0.2S/0.2	10/10, 15/15, 20/20	40	100
		0.2/0.5, 0.2S/0.5	10/15, 15/15, 20/20	40	100
		0.2/10P10, 0.5/10P10	10/15, 15/15, 15/20	40	100
		0.2/10P15, 0.5/10P15	10/10, 15/15	40	100
		0.2/10P20, 0.5/10P20	10/10, 15/15	40	100
		0.2/0.5/10P10	15/15/15	40	100
		0.5/10P20	20/20	31.5	80
		0.2/0.5/10P20	15/15/15	31.5	80
		0.2	10, 15, 20, 30	63	160
	300, 400 500, 600, 630	0.5	10, 15, 20, 30	63	160
		0.2S	10, 15, 20, 30	63	160
		0.2/0.2, 0.2S/0.2	10/10, 15/15, 20/20	63	160
		0.2/0.5, 0.2S/0.5	10/15, 15/15, 20/20	63	160
		0.2/10P10, 0.5/10P10	10/15, 15/15, 15/20	63	160
		0.2/10P15, 0.5/10P15	10/10, 15/15	63	160
		0.2/10P20, 0.5/10P20	10/10, 15/15	63	160
		0.2/0.5/10P10	15/15/15	63	160
		0.5/10P20	20/20	40	100
		0.2/0.5/10P20	15/15/15, 15/15/20	40	100

型号 Type	额定一次电流 Rated primary current (A)	准确级组合 Accuracy classes combination	额定输出 Rated output (VA)	额定短时热电流 Rated short-time thermal current (kA/1s)	额定动稳定电流 Rated dynamic current (kA)
LZZBJ9-12/185h(s)/5-2	500, 600, 630	0.2/10P10/10P20	15/15/20	40	100
		0.2/0.5/10P10/10P10	15/15/20/20	40	100
		0.2	10, 15, 20, 30	63	160
		0.5	10, 15, 20, 30	63	160
		0.2S	10, 15, 20, 30	63	160
		0.2/0.2, 0.2S/0.2	10/10, 15/15, 20/20	63	160
		0.2/0.5, 0.2S/0.5	10/15, 15/15, 20/20	63	160
		0.2/10P10, 0.5/10P10	10/15, 15/15, 15/20, 30/30	63	160
		0.2/10P15, 0.5/10P15	10/10, 15/15, 30/30	63	160
		0.2/10P20, 0.5/10P20	10/10, 15/15, 30/30	63	160
		0.2/0.5/10P10	15/15/15, 15/15/30	63	160
		0.2/0.5/10P20	15/15/15, 15/15/30	63	160
		0.2/10P10/10P20	15/15/15, 15/15/30	63	160
		0.2/0.5/10P10/10P20	15/15/15/20	63	160
	750, 800	0.2	10, 15, 20, 30	80	200
		0.5	10, 15, 20, 30	80	200
		0.2S	10, 15, 20, 30	80	200
		0.2/0.2, 0.2S/0.2	10/10, 15/15, 20/20	80	200
		0.2/0.5, 0.2S/0.5	10/15, 15/15, 20/20	80	200
		0.2/10P10, 0.5/10P10	10/15, 15/15, 15/20, 30/30	80	200
		0.2/10P15, 0.5/10P15	10/10, 15/15, 30/30	80	200
		0.2/10P20, 0.5/10P20	10/10, 15/15, 30/30	80	200
		0.2/0.5/10P10	15/15/15, 15/15/30	80	200
		0.2/0.5/10P20	15/15/15, 15/15/30	80	200
		0.2/10P10/10P20	15/15/15, 15/15/30	80	200
		0.2/0.5/10P10/10P20	15/15/15/30	80	200
		0.2/0.5/10P20/10P20	15/15/20/20	80	200
	1000, 1200, 1250	0.2	10, 15, 20, 30	100	250
		0.5	10, 15, 20, 30	100	250
		0.2S	10, 15, 20, 30	100	250
		0.2/0.2, 0.2S/0.2	10/10, 15/15, 20/20	100	250
		0.2/0.5, 0.2S/0.5	10/15, 15/15, 20/20	100	250
		0.2/10P10, 0.5/10P10	10/15, 15/15, 15/20, 30/30	100	250
		0.2/10P15, 0.5/10P15	10/10, 15/15, 30/30	100	250
		0.2/10P20, 0.5/10P20	10/10, 15/15, 30/30	100	250
		0.2/0.5/10P10	15/15/15, 15/15/30	100	250
		0.2/0.5/10P20	15/15/15, 15/15/30	100	250
		0.2/10P10/10P20	15/15/15, 15/15/30	100	250
		0.2/0.5/10P10/10P20	15/15/30/30	100	250
		0.2/0.5/10P20/10P20	15/15/20/20	100	250

外形尺寸图

Overall dimensions

二次接线端子数最多 8 个

Not more than 8 secondary terminals

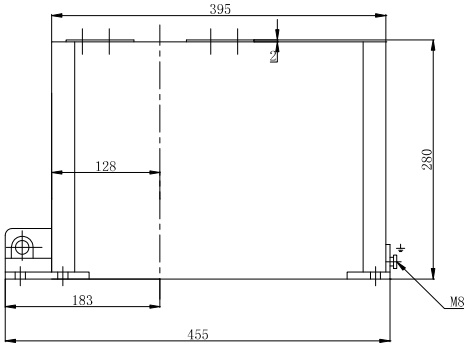

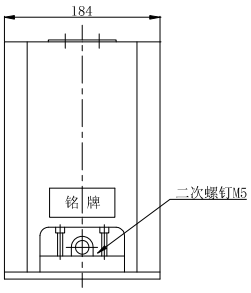

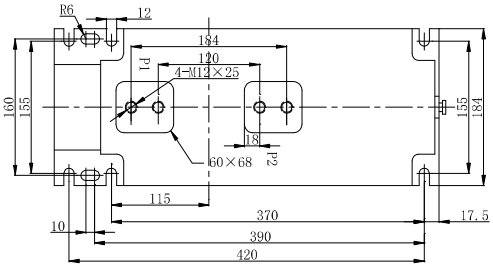

净重(Weight)：53kg

LZZBJ9-12/185h/5-2

二次接线端子数最多 12 个

Not more than 12 secondary terminals

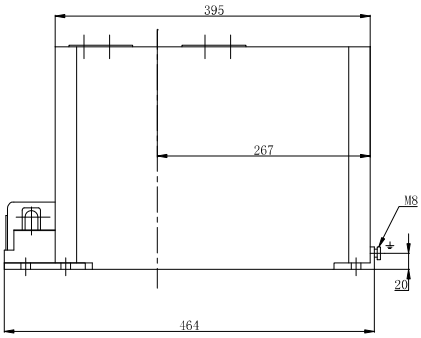

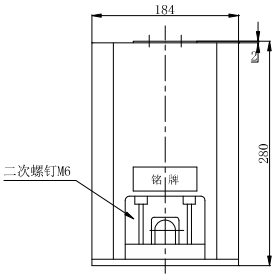

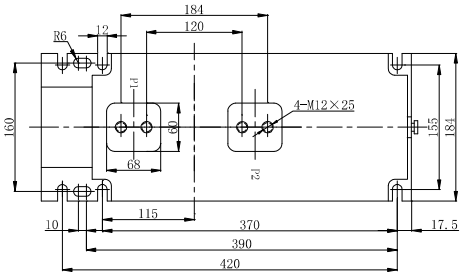

LZZBJ9-12/185s/5-2

净重(Weight)：53kg

LZZBJ9-12/185h(s)/5 电流互感器

型号 Type	额定一次电流 Rated primary current (A)	准确级组合 Accuracy classes combination	额定输出 Rated output (VA)	额定短时热电流 Rated short-time thermal current (kA/1s)	额定动稳定电流 Rated dynamic current (kA)
LZZBJ9-12/185h(s)/5	20	0.2	10, 15, 20, 30	10	25
		0.5	10, 15, 20, 30	10	25
		0.2S	10, 15, 20, 30	10	25
		0.2/10P15	15/15	10	25
	25	0.2	10, 15, 20, 30	10	25
		0.5	10, 15, 20, 30	10	25
		0.2S	10, 15, 20, 30	10	25
		0.2/0.5	10/15, 20/20	10	25
		0.2/5P15, 0.5/5P15	10/15, 15/15	10	25
	30	0.2	10, 15, 20, 30	10	25
		0.5	10, 15, 20, 30	10	25
		0.2S	10, 15, 20, 30	10	25
		0.2/0.2	10/10, 15/15, 20/20	10	25
		0.2S/0.5	10/10, 15/15, 20/20	10	25
		0.2/10P10	10/10, 10/15, 15/15, 20/20	10	25
		0.5/10P10	10/10, 10/15, 15/15, 20/20	10	25
		0.5/10P15	10/10, 15/15	10	25
	40	0.2	10, 15, 20, 30	10	25
		0.5	10, 15, 20, 30	20	50
		0.2S	10, 15, 20, 30	10	25
		0.2/0.2	10/10, 15/15, 20/20	10	25
		0.2S/0.5	10/10, 15/15, 20/20	10	25
		0.2/10P10, 0.5/10P10	10/15, 15/15, 20/20	10	25
		0.5/10P15	10/10, 15/15, 15/20	10	25
	50, 60	0.2	10, 15, 20, 30	20	50
		0.5	10, 15, 20, 30	25	63
		0.2S	10, 15, 20, 30	20	50
		0.2/0.2, 0.2S/0.2	10/10, 15/15, 20/20	20	50
		0.2/0.5, 0.2S/0.5	10/15, 15/15, 20/20	20	50
		0.5/10P10	5/5	50	125
		0.2/10P10, 0.5/10P10	10/15, 15/15, 20/20	20	50
		0.2/10P15, 0.5/10P15	10/10, 15/15	20	50
		0.2/10P20, 0.5/10P20	10/10, 15/15	20	50
		0.2/0.5/10P10	15/15/15	20	50
	75	0.2	10, 15, 20, 30	31.5	80
		0.5	10, 15, 20, 30	31.5	80
		0.2S	10, 15, 20, 30	31.5	80
		0.2/0.2, 0.2S/0.2	10/10, 15/15, 20/20	31.5	80
		0.2/0.5, 0.2S/0.5	10/15, 15/15, 20/20	31.5	80
		0.5/10P10	5/5	50	125
		0.2/10P10, 0.5/10P10	10/15, 15/15, 15/20	31.5	80
		0.2/10P20, 0.5/10P20	10/10, 15/15	25	63
		0.5/10P20	20/20	15	38
		0.2/0.5/10P20	15/15/15	15	38
	100	0.2	10, 15, 20, 30	40	100
		0.5	10, 15, 20, 30	40	100
		0.2S	10, 15, 20, 30	40	100
		0.2/0.2, 0.2S/0.2	10/10, 15/15, 20/20	40	100
		0.2/0.5, 0.2S/0.5	10/15, 15/15, 20/20	40	100

型号 Type	额定一次电流 Rated primary current (A)	准确级组合 Accuracy classes combination	额定输出 Rated output (VA)	额定短时热电流 Rated short-time thermal current (kA/1s)	额定动稳定电流 Rated dynamic current (kA)
LZZBJ9-12/185h(s)/5	100	0.5/10P10	7.5/7.5	50	125
		0.2/10P10, 0.5/10P10	10/15, 15/15, 15/20	40	100
		0.2/10P15, 0.5/10P15	10/10, 15/15	40	100
		0.2/10P20, 0.5/10P20	10/10, 15/15	40	100
		0.2/0.5/10P10	15/15/15	40	100
		0.5/10P20	20/20	20	50
		0.2/0.5/10P20	15/15/15	20	50
	125	0.2, 0.2S, 0.5	10, 15	40	100
		0.2/10P10, 0.5/10P10	15/15	40	100
		0.2/10P20, 0.5/10P20	15/15	25	63
	150	0.2	10, 15, 20, 30	50	125
		0.5	10, 15, 20, 30	50	125
		0.2S	10, 15, 20, 30	50	125
		0.2/0.2, 0.2S/0.2	10/10, 15/15, 20/20	50	125
		0.2/0.5, 0.2S/0.5	10/15, 15/15, 20/20	50	125
		0.5/10P10	7.5/7.5	50	125
		0.2/10P10, 0.5/10P10	10/15, 15/15, 15/20	50	125
		0.2/10P15, 0.5/10P15	10/10, 15/15	40	100
		0.2/10P20, 0.5/10P20	10/10, 15/15	40	100
		0.2/0.5/10P10	15/15/15	50	125
		0.5/10P20	20/20	25	63
		0.2/0.5/10P20	15/15/15	25	63
	200，250	0.2	10, 15, 20, 30	50	125
		0.5	10, 15, 20, 30	50	125
		0.2S	10, 15, 20, 30	50	125
		0.2/0.2, 0.2S/0.2	10/10, 15/15, 20/20	50	125
		0.2/0.5, 0.2S/0.5	10/15, 15/15, 20/20	50	125
		0.5/10P10	10/10	50	125
		0.2/10P10, 0.5/10P10	10/15, 15/15, 15/20	50	125
		0.2/10P15, 0.5/10P15	10/10, 15/15	40	100
		0.2/10P20, 0.5/10P20	10/10, 15/15	40	100
		0.2/0.5/10P10	15/15/15	50	125
		0.5/10P20	20/20	31.5	80
		0.2/0.5/10P20	15/15/15	31.5	80
	300, 400	0.2	10, 15, 20, 30	63	160
		0.5	10, 15, 20, 30	63	160
		0.2S	10, 15, 20, 30	63	160
		0.2/0.2, 0.2S/0.2	10/10, 15/15, 20/20	63	160
		0.2/0.5, 0.2S/0.5	10/15, 15/15, 20/20	63	160
		0.2/10P10, 0.5/10P10	10/15, 15/15, 15/20	63	160
		0.2/10P15, 0.5/10P15	10/10, 15/15	63	160
		0.2/10P20, 0.5/10P20	10/10, 15/15	63	160
		0.2/0.5/10P10	15/15/15	63	160
		0.5/10P20	20/20	40	100
		0.2/0.5/10P20	15/15/15, 15/15/20	40	100
		0.2/10P10/10P20	15/15/20	40	100
		0.2/0.5/10P10/10P10	15/15/20/20	40	100
	500, 600, 630	0.2	10, 15, 20, 30	63	160
		0.5	10, 15, 20, 30	63	160
		0.2S	10, 15, 20, 30	63	160
		0.2/0.2, 0.2S/0.2	10/10, 15/15, 20/20	63	160
		0.2/0.5, 0.2S/0.5	10/15, 15/15, 20/20	63	160

型号 Type	额定一次电流 Rated primary current (A)	准确级组合 Accuracy classes combination	额定输出 Rated output (VA)	额定短时热电流 Rated short-time thermal current (kA/1s)	额定动稳定电流 Rated dynamic current (kA)
LZZBJ9-12/185h(s)/5	500, 600, 630	0.2/10P10, 0.5/10P10	10/15, 15/15, 15/20, 30/30	63	160
		0.2/10P15, 0.5/10P15	10/10, 15/15, 30/30	63	160
		0.2/10P20, 0.5/10P20	10/10, 15/15, 30/30	63	160
		0.2/0.5/10P10	15/15/15, 15/15/30	63	160
		0.2/0.5/10P20	15/15/15, 15/15/30	63	160
		0.2/10P10/10P20	15/15/15, 15/15/30	63	160
		0.2/0.5/10P10/10P20	15/15/15/20	63	160
	750, 800	0.2	10, 15, 20, 30	80	200
		0.5	10, 15, 20, 30	80	200
		0.2S	10, 15, 20, 30	80	200
		0.2/0.2, 0.2S/0.2	10/10, 15/15, 20/20	80	200
		0.2/0.5, 0.2S/0.5	10/15, 15/15, 20/20	80	200
		0.2/10P10, 0.5/10P10	10/15, 15/15, 15/20, 30/30	80	200
		0.2/10P15, 0.5/10P15	10/10, 15/15, 30/30	80	200
		0.2/10P20, 0.5/10P20	10/10, 15/15, 30/30	80	200
		0.2/0.5/10P10	15/15/15, 15/15/30	80	200
		0.2/0.5/10P20	15/15/15, 15/15/30	80	200
		0.2/10P10/10P20	15/15/15, 15/15/30	80	200
		0.2/0.5/10P10/10P20	15/15/15/30	80	200
		0.2/0.5/10P20/10P20	15/15/20/20	80	200
	1000-2000	0.2	10, 15, 20, 30	100	250
		0.5	10, 15, 20, 30	100	250
		0.2S	10, 15, 20, 30	100	250
		0.2/0.2, 0.2S/0.2	10/10, 15/15, 20/20	100	250
		0.2/0.5, 0.2S/0.5	10/15, 15/15, 20/20	100	250
		0.2/10P10, 0.5/10P10	10/15, 15/15, 15/20, 30/30	100	250
		0.2/10P15, 0.5/10P15	10/10, 15/15, 30/30	100	250
		0.2/10P20, 0.5/10P20	10/10, 15/15, 30/30	100	250
		0.2/0.5/10P10	15/15/15, 15/15/30	100	250
		0.2/0.5/10P20	15/15/15, 15/15/30	100	250
		0.2/10P10/10P20	15/15/15, 15/30/30	100	250
		0.5/10P20/10P20	15/30/30	100	250
		0.2/0.5/10P10/10P20	15/15/30/30	100	250
		0.2/0.5/10P20/10P20	15/15/20/20	100	250
	2500-3150	0.2	10, 15, 20, 30	100	250
		0.5	10, 15, 20, 30	100	250
		0.2S	10, 15, 20, 30	100	250
		0.2/0.2, 0.2S/0.2	10/10, 15/15, 20/20	100	250
		0.2/0.5, 0.2S/0.5	10/15, 15/15, 20/20	100	250
		0.2/10P10, 0.5/10P10	10/15, 15/15, 15/20, 30/30	100	250
		0.2/10P15, 0.5/10P15	10/10, 15/15, 30/30	100	250
		0.2/10P20, 0.5/10P20	10/10, 15/15, 30/30	100	250
		0.2/0.5/10P10	15/15/15, 15/15/30	100	250
		0.2/0.5/10P20	15/15/15, 15/15/30	100	250
		0.2/10P20/10P20	15/15/15, 15/25/25	100	250
		0.2/0.5/10P10/10P20	15/15/15/20	100	250
		0.2/0.5/10P20/10P20	15/15/15/15	100	250

外形尺寸图

Overall dimensions

二次接线端子数最多 8 个

Not more than 8 secondary terminals

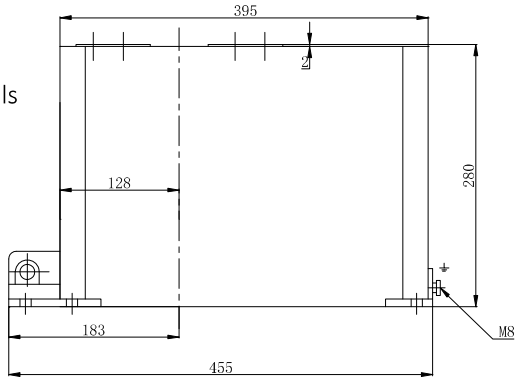

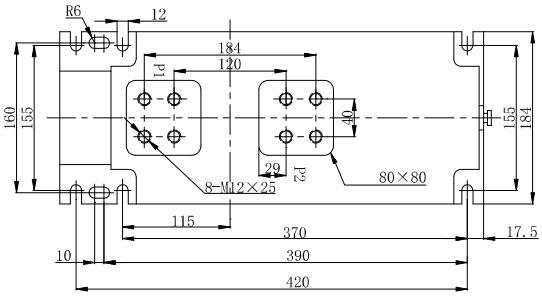

净重(Weight)：63kg

LZZBJ9-12/185h/5

二次多端子时外形图

二次接线端子数最多 12 个

Not more than 12 secondary terminals

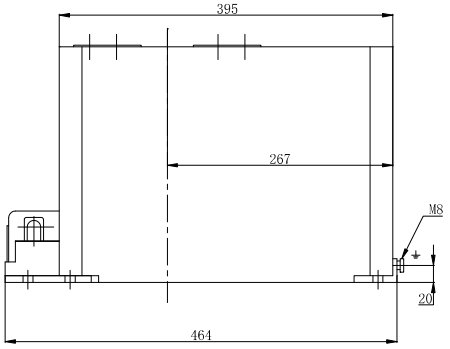

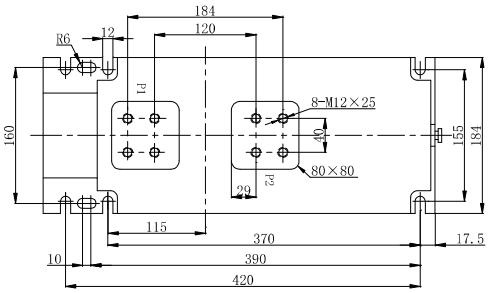

净重(Weight)：63kg

LZZBJ9-12/185s/5

LZZBJ9-12/225f/4 电流互感器

额定一次电流 Rated primary current (A)	准确级组合 Accuracy classes combination	额定输出 Rated output (VA)	额定短时热电流 Rated short-time thermal current (kA/1s)	额定动稳定电流 Rated dynamic current (kA)
600, 800	0.2/0.2/5P10	10/10/40	63	158
	0.2/0.5/5P15	10/20/40		
	0.2/5P10/5P20	10/20/30		
	0.2/5P10/5P15	10/20/30		
	0.5/5P10/5P20	10/20/20		
1000-1250	0.2/0.2/5P10	15/15/40	100	250
	0.2/0.5/5P15	15/30/30		
	0.2/5P10/5P20	10/30/20		
	0.2/5P10/5P15	15/30/30		
	0.5/5P10/5P20	30/30/20		
1500	0.2/0.2/5P10	15/15/40	100	250
	0.2/0.5/5P15	15/30/30		
	0.2/5P10/5P20	10/30/20		
	0.2/5P10/5P15	15/30/30		
	0.5/5P10/5P20	30/30/20		
2000	0.2/0.2/5P10	15/15/40	100	250
	0.2/0.5/5P15	15/30/40		
	0.2/5P10/5P20	15/30/30		
	0.2/5P10/5P15	30/30/20		
	0.5/5P10/5P20	15/15/40		
2500	0.2/0.2/5P10	15/15/40	100	250
	0.2/0.5/5P15	15/30/40		
	0.2/5P10/5P20	15/30/30		
	0.2/5P10/5P15	30/30/20		
	0.5/5P10/5P20	15/15/40		
3000-5000	0.2S/5P10/5P20 0.2/5P10/5P20 0.5/5P10/5P20 0.5/5P20/5P20 0.2/0.5/5P10/5P20 0.2/0.5/5P20/5P20 0.5/5P20/5P20/5P20	30	63	160

外形尺寸图 Overall dimensions

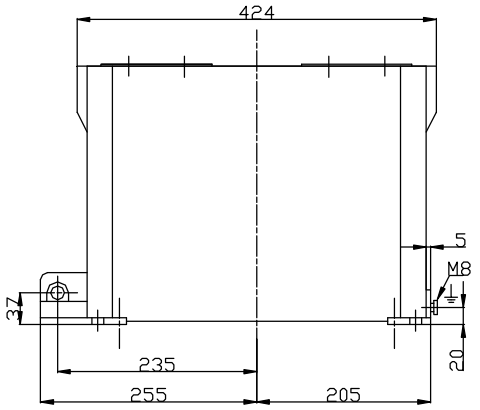

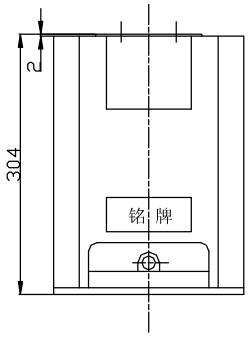

二次端子数量≤8

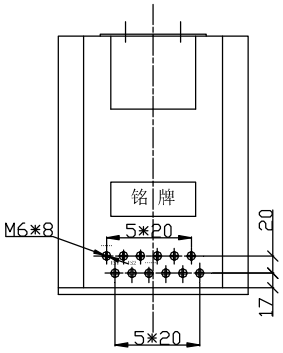

9<二次端子数量≤12

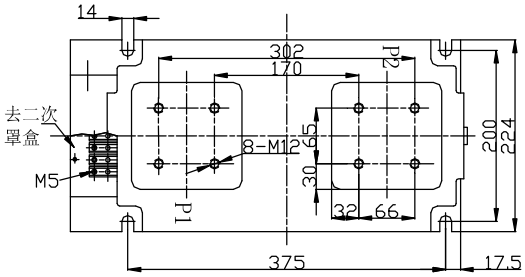

3000A≤I1n≤5000A

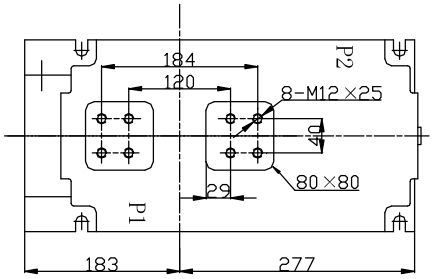

I1n≤2500A

LZZBJ9-12/225f/4

净重（Weight）：67kg

LZZBJ9-12/260f/4 电流互感器

型号 Type	额定一次电流 Rated primary current (A)	准确级组合 Accuracy classes combination	额定输出 Rated output (VA)	额定短时热电流 Rated short-time thermal current (kA/1s)	额定动稳定电流 Rated dynamic current (kA)
LZZBJ9-12/260f/4	20	0.2	10, 15, 20, 30	10	25
		0.5	10, 15, 20, 30	10	25
		0.2S	10, 15, 20, 30	10	25
		0.2/10P10	15/15, 15/20	10	25
	25	0.2	10, 15, 20, 30	10	25
		0.5	10, 15, 20, 30	10	25
		0.2S	10, 15, 20, 30	10	25
		0.2/0.5	10/15, 20/20	10	25
		0.2/5P20, 0.5/5P20	10/15, 15/15, 15/20	10	25
	30	0.2	10, 15, 20, 30	10	25
		0.5	10, 15, 20, 30	10	25
		0.2S	10, 15, 20, 30	10	25
		0.2/0.2	10/10, 15/15, 20/20	10	25
		0.2S/0.5	10/10, 15/15, 20/20	10	25
		0.2/10P20	10/10, 10/15, 15/15, 20/20	10	25
		0.5/10P20	10/10, 10/15, 15/15, 20/20	10	25
		0.5/10P20	10/10, 15/15	10	25
	40	0.2	10, 15, 20, 30	10	25
		0.5	10, 15, 20, 30	20	50
		0.2S	10, 15, 20, 30	10	25
		0.2/0.2	10/10, 15/15, 20/20	10	25
		0.2S/0.5	10/10, 15/15, 20/20	10	25
		0.2/10P20, 0.5/10P20	10/15, 15/15, 20/20	10	25
		0.5/10P30	10/10, 15/15, 15/20	10	25
	50, 60	0.2	10, 15, 20, 30	20	50
		0.5	10, 15, 20, 30	25	63
		0.2S	10, 15, 20, 30	20	50
		0.2/0.2, 0.2S/0.2	10/10, 15/15, 20/20	20	50
		0.2/0.5, 0.2S/0.5	10/15, 15/15, 20/20	20	50
		0.2/10P20, 0.5/10P20	10/15, 15/15, 20/20	20	50
		0.2/10P25, 0.5/10P25	10/10, 15/15	20	50
		0.2/10P30, 0.5/10P30	10/10, 15/15	20	50
		0.2/0.5/10P30	15/15/15	20	50
	75	0.2	10, 15, 20, 30	31.5	80
		0.5	10, 15, 20, 30	31.5	80
		0.2S	10, 15, 20, 30	31.5	80
		0.2/0.2, 0.2S/0.2	10/10, 15/15, 20/20	31.5	80
		0.2/0.5, 0.2S/0.5	10/15, 15/15, 20/20	31.5	80
		0.2/10P20, 0.5/10P20	10/15, 15/15, 15/20	31.5	80
		0.2/10P25, 0.5/10P25	10/10, 15/15	25	63
		0.2/10P30, 0.5/10P30	10/10, 15/15	25	63
		0.5/10P30	20/20	15	38
		0.2/0.5/10P20	15/15/15	25	63
		0.2/0.5/10P30	15/15/15	15	38
	100	0.2	10, 15, 20, 30	40	100
		0.5	10, 15, 20, 30	40	100
		0.2S	10, 15, 20, 30	40	100
		0.2/0.2, 0.2S/0.2	10/10, 15/15, 20/20	40	100
		0.2/0.5, 0.2S/0.5	10/15, 15/15, 20/20	40	100

型号 Type	额定一次电流 Rated primary current (A)	准确级组合 Accuracy classes combination	额定输出 Rated output (VA)	额定短时热电流 Rated short-time thermal current (kA/1s)	额定动稳定电流 Rated dynamic current (kA)
LZZBJ9-12/260f/4	100	0.5/10P20	10/10	50	125
		0.2/10P20, 0.5/10P20	10/15, 15/15, 15/20	40	100
		0.2/10P25, 0.5/10P25	10/10, 15/15	40	100
		0.2/10P30, 0.5/10P30	10/10, 15/15	40	100
		0.2/0.5/10P20	15/15/15	40	100
		0.5/10P30	20/20	20	50
		0.2/0.5/10P30	15/15/15	20	50
	125	0.2, 0.2S, 0.5	10, 15	40	100
		0.2/10P20, 0.5/10P20	15/15	40	100
		0.2/10P30, 0.5/10P30	15/15	25	63
	150	0.2	10, 15, 20, 30	50	125
		0.5	10, 15, 20, 30	50	125
		0.2S	10, 15, 20, 30	50	125
		0.2/0.2, 0.2S/0.2	10/10, 15/15, 20/20	50	125
		0.2/0.5, 0.2S/0.5	10/15, 15/15, 20/20	50	125
		0.5/10P20	10/10	50	125
		0.2/10P20, 0.5/10P20	10/15, 15/15, 15/20	50	125
		0.2/10P25, 0.5/10P25	10/10, 15/15	40	100
		0.2/10P30, 0.5/10P30	10/10, 15/15	40	100
		0.2/0.5/10P20	15/15/15	50	125
		0.5/10P30	20/20	25	63
		0.2/0.5/10P30	15/15/15	25	63
	200，250	0.2	10, 15, 20, 30	50	125
		0.5	10, 15, 20, 30	50	125
		0.2S	10, 15, 20, 30	50	125
		0.2/0.2, 0.2S/0.2	10/10, 15/15, 20/20	50	125
		0.2/0.5, 0.2S/0.5	10/15, 15/15, 20/20	50	125
		0.5/10P20	10/10	50	125
		0.2/10P20, 0.5/10P20	10/15, 15/15, 15/20	50	125
		0.2/10P25, 0.5/10P25	10/10, 15/15	40	100
		0.2/10P30, 0.5/10P30	10/10, 15/15	40	100
		0.2/0.5/10P20	15/15/15	50	125
		0.5/10P30	20/20	31.5	80
		0.2/0.5/10P30	15/15/15	31.5	80
	300, 400	0.2	10, 15, 20, 30	63	160
		0.5	10, 15, 20, 30	63	160
		0.2S	10, 15, 20, 30	63	160
		0.2/0.2, 0.2S/0.2	10/10, 15/15, 20/20	63	160
		0.2/0.5, 0.2S/0.5	10/15, 15/15, 20/20	63	160
		0.2/10P20, 0.5/10P20	10/15, 15/15, 15/20	63	160
		0.2/10P25, 0.5/10P25	10/10, 15/15	63	160
		0.2/10P30, 0.5/10P30	10/10, 15/15	63	160
		0.2/0.5/10P20	15/15/15	63	160
		0.5/10P30	20/20	40	100
		0.2/0.5/10P30	15/15/15, 15/15/20	40	100
		0.2/10P20/10P30	15/15/20	40	100
		0.2/0.5/10P20/10P20	15/15/20/20	40	100
	500, 600, 630	0.2	10, 15, 20, 30	63	160
		0.5	10, 15, 20, 30	63	160
		0.2S	10, 15, 20, 30	63	160
		0.2/0.2, 0.2S/0.2	10/10, 15/15, 20/20	63	160
		0.2/0.5, 0.2S/0.5	10/15, 15/15, 20/20	63	160

型号 Type	额定一次电流 Rated primary current (A)	准确级组合 Accuracy classes combination	额定输出 Rated output (VA)	额定短时热电流 Rated short-time thermal current (kA/1s)	额定动稳定电流 Rated dynamic current (kA)
LZZBJ9-12/260f/4	500, 600, 630	0.2/10P20, 0.5/10P20	10/15, 15/15, 15/20, 30/30	63	160
		0.2/10P25, 0.5/10P25	10/10, 15/15, 30/30	63	160
		0.2/10P30, 0.5/10P30	10/10, 15/15, 30/30	63	160
		0.2/0.5/10P20	15/15/15, 15/15/30	63	160
		0.2/0.5/10P30	15/15/15, 15/15/30	63	160
		0.2/10P20/10P30	15/15/15, 15/15/30	63	160
		0.2/0.5/10P20/10P30	15/15/15/20	63	160
	750, 800	0.2	10, 15, 20, 30	80	200
		0.5	10, 15, 20, 30	80	200
		0.2S	10, 15, 20, 30	80	200
		0.2/0.2, 0.2S/0.2	10/10, 15/15, 20/20	80	200
		0.2/0.5, 0.2S/0.5	10/15, 15/15, 20/20	80	200
		0.2/10P20, 0.5/10P20	10/15, 15/15, 15/20, 30/30	80	200
		0.2/10P25, 0.5/10P25	10/10, 15/15, 30/30	80	200
		0.2/10P30, 0.5/10P30	10/10, 15/15, 30/30	80	200
		0.2/0.5/10P20	15/15/15, 15/15/30	80	200
		0.2/0.5/10P30	15/15/15, 15/15/30	80	200
		0.2/10P20/10P30	15/15/15, 15/15/30	80	200
		0.2/0.5/10P20/10P30	15/15/15/30	80	200
		0.2/0.5/10P20/10P30	15/15/20/20	80	200
	1000-2000	0.2	10, 15, 20, 30	100	250
		0.5	10, 15, 20, 30	100	250
		0.2S	10, 15, 20, 30	100	250
		0.2/0.2, 0.2S/0.2	10/10, 15/15, 20/20	100	250
		0.2/0.5, 0.2S/0.5	10/15, 15/15, 20/20	100	250
		0.2/10P20, 0.5/10P20	10/15, 15/15, 15/20, 30/30	100	250
		0.2/10P25, 0.5/10P25	10/10, 15/15, 30/30	100	250
		0.2/10P30, 0.5/10P30	10/10, 15/15, 30/30	100	250
		0.2/0.5/10P20	15/15/15, 15/15/30	100	250
		0.2/0.5/10P30	15/15/15, 15/15/30	100	250
		0.2/10P20/10P30	15/15/15, 15/30/30	100	250
		0.5/10P20/10P30	15/30/30	100	250
		0.2/0.5/10P20/10P30	15/15/30/30	100	250
		0.2/0.5/10P20/10P30	15/15/20/20	100	250
	2500-5000	0.2	10, 15, 20, 30	100	250
		0.5	10, 15, 20, 30	100	250
		0.2S	10, 15, 20, 30	100	250
		0.2/0.2, 0.2S/0.2	10/10, 15/15, 20/20	100	250
		0.2/0.5, 0.2S/0.5	10/15, 15/15, 20/20	100	250
		0.2/10P20, 0.5/10P20	10/15, 15/15, 15/20, 30/30	100	250
		0.2/10P25, 0.5/10P25	10/10, 15/15, 30/30	100	250
		0.2/10P30, 0.5/10P30	10/10, 15/15, 30/30	100	250
		0.2/0.5/10P20	15/15/15, 15/15/30	100	250
		0.2/0.5/10P30	15/15/15, 15/15/30	100	250
		0.2/10P20/10P20	15/15/15, 15/25/25	100	250
		0.2/0.5/10P20/10P20	15/15/15/20	100	250
		0.2/0.5/10P20/10P20	15/15/15/15	100	250

外形尺寸图 Overall dimensions

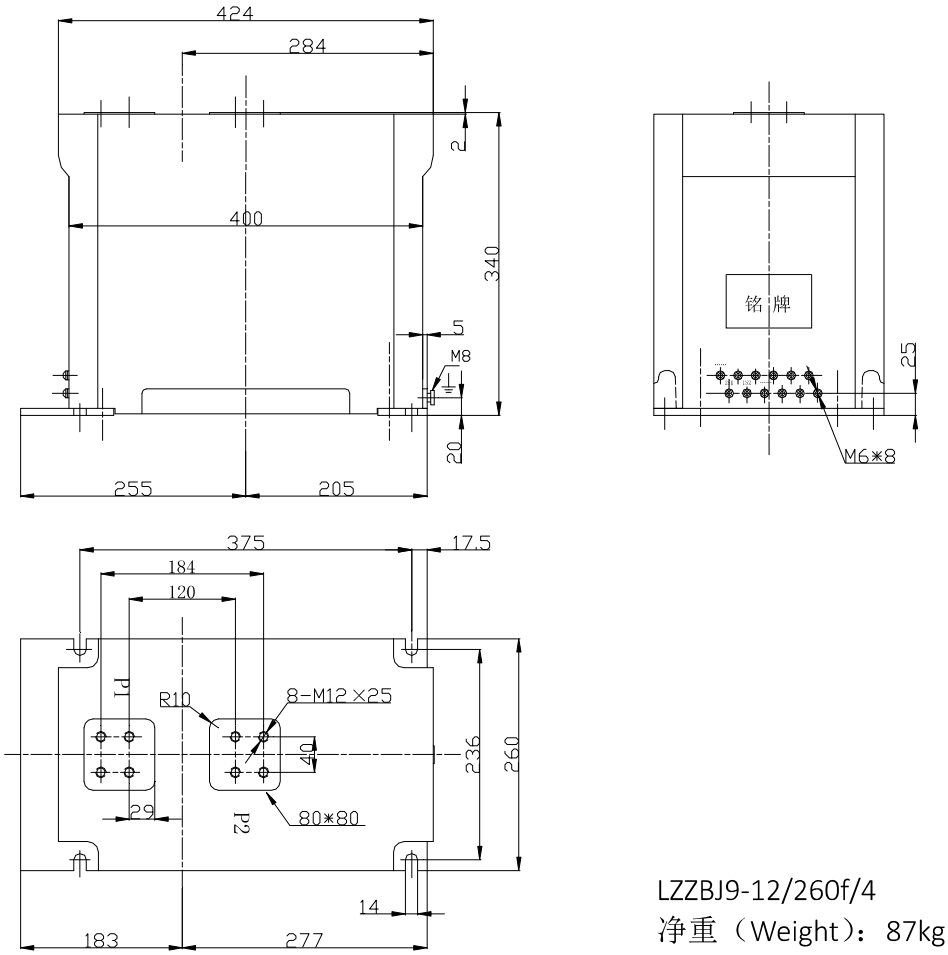

LZZBJ9-12/260f/4

净重（Weight）：87kg

LZZBJ9-12/150b/2, LZZBJ9-12/150b/4 代电流互感器

外形尺寸图 Overall dimensions

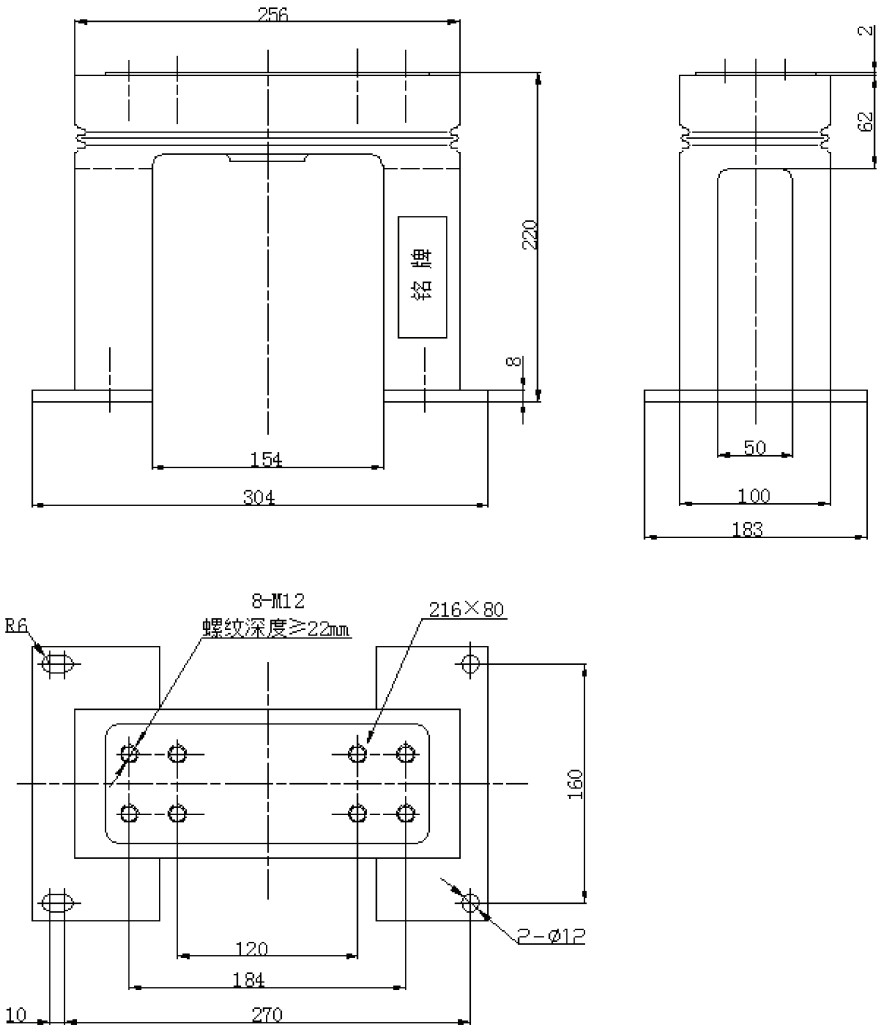

LZZBJ9-12/150b/2　代电流互感器
LZZBJ9-12/150b/4　代电流互感器
额定一次电流：1250A
净重（Weight）：7.5kg

LZZBJ9-12/150b/2SG 代电流互感器

外形尺寸图 Overall dimensions

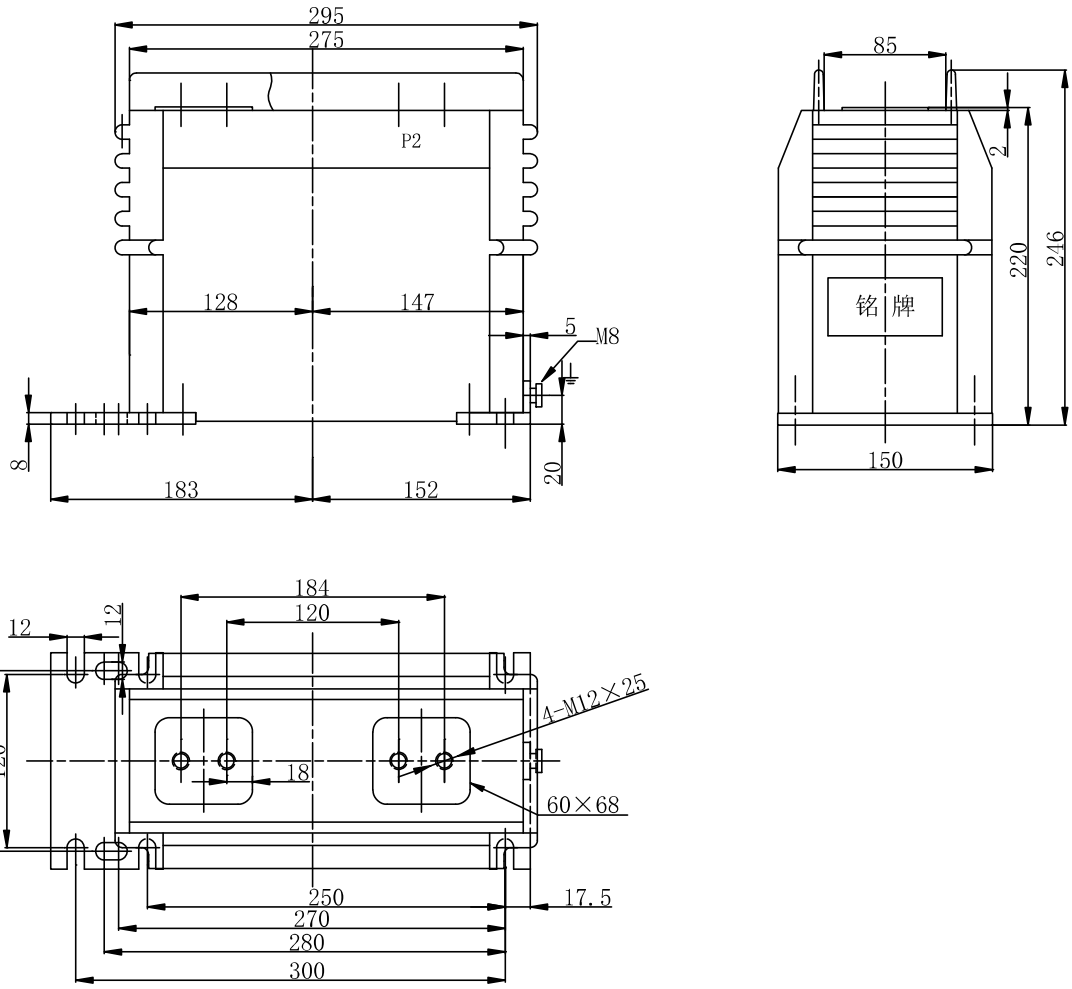

LZZBJ9-12/150b/2SG　代电流互感器
额定一次电流：1250A
净重（Weight）：20kg

LZZBJ9-12/185h/2, LZZBJ9-12/185h/4 代电流互感器

外形尺寸图 Overall dimensions

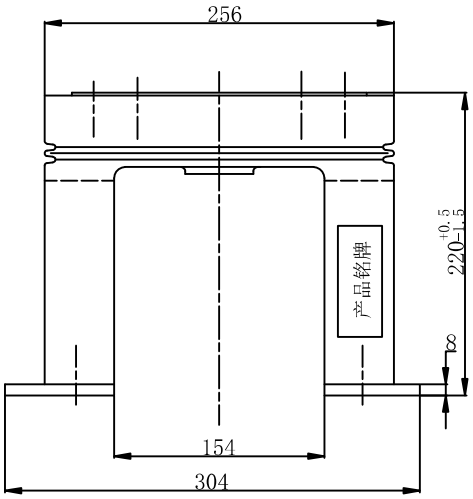

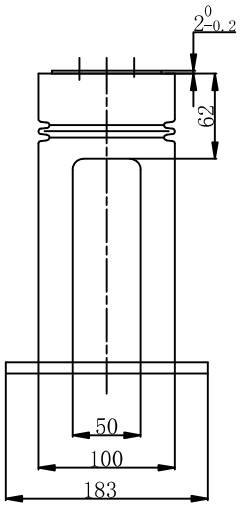

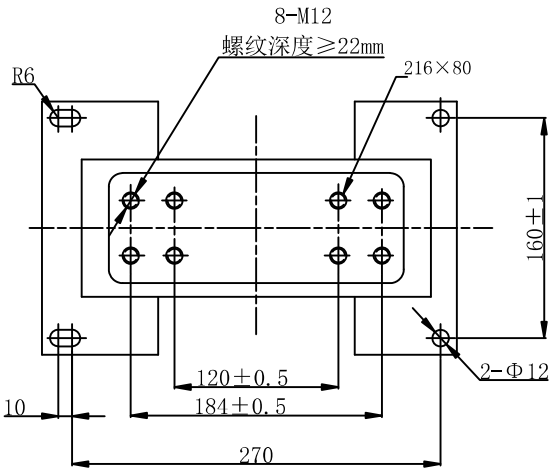

LZZBJ9-12/185h/2 代电流互感器
LZZBJ9-12/185h/4 代电流互感器
额定一次电流：2500A
净重（Weight）：8.5kg

一、户内浇注电流互感器

20kv 电流互感器

LMZD-20 电流互感器

型号 Type	额定一次电流 Rated primary current (A)	准确级组合 Accuracy classes combination	额定输出 Rated output (VA)
LMZD-20	5000～8000	0.2/0.2 0.2/0.5 0.2/10P20 0.5/10P20	20/20 20/30 20/30 30/30
	10000～12000	0.2/0.2 0.2/0.5 0.2/10P20 0.5/10P20	30/30 30/30 30/40 30/40

外形尺寸图
Overall dimensions

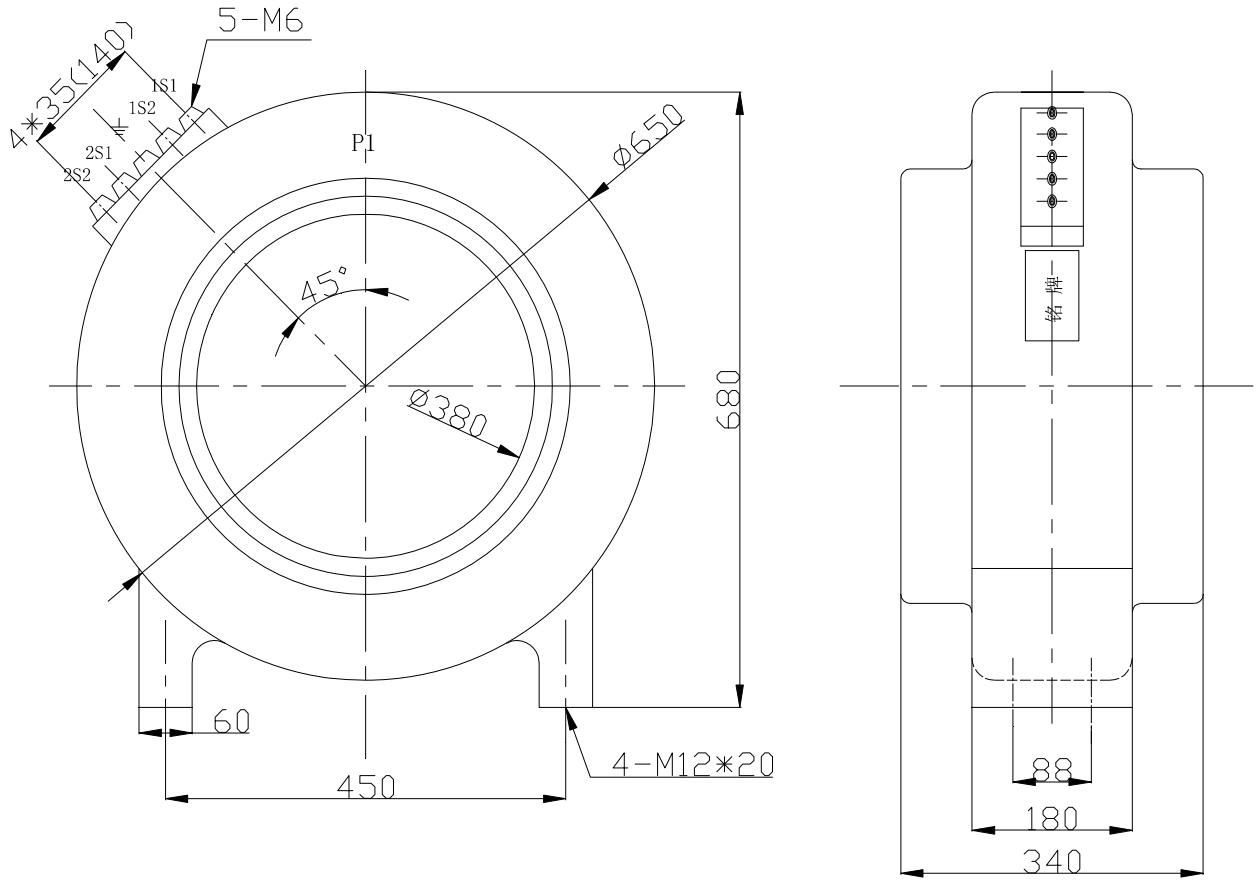

LMZD-20　　净重（Weight）：105kg

LZZBJ9-24/185b/3W2-2 电流互感器

额定一次电流 Rated primary current (A)	额定短时热电流 Ith (kA/1s)	额定动稳定电流 Idyn (kA peak)	准确级组合 Accuracy classes combination	额定输出 Rated output(VA)			
				0.2S, 0.5S	0.2	0.5	5P
20-40	250I1n	625I1n	0.2S/0.5 0.2/0.5 0.2S/5P10 0.5S/5P10 0.2/5P10 0.5/5P10	10	15	15	15
50-100	300I1n	750I1n					
150-250	40	100					
300-1250	63	160					
100-200	150I1n	375I1n	0.2S/5P20 0.5S/5P20 0.2/5P20 0.5/5P20 0.2/0.5/5P10				
300-500	40	100					
600-1000	80	200					
1250	100	250	0.2S/5P20 0.5S/5P20 0.2/5P20 0.5/5P20	10	15	15	15

外形尺寸图 Overall dimensions

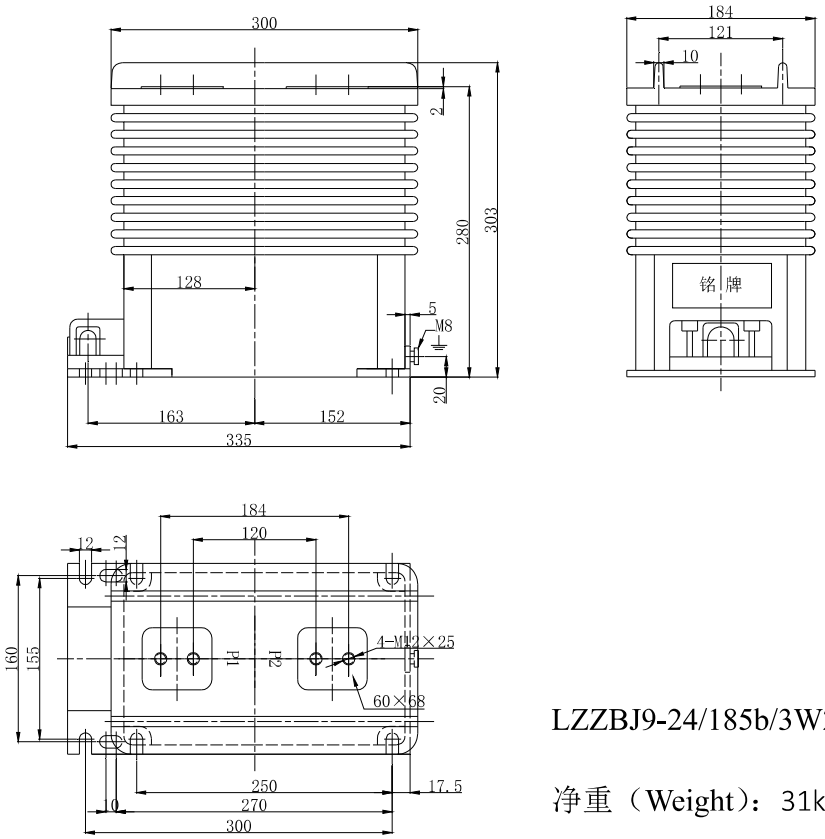

LZZBJ9-24/185b/3W2-2

净重（Weight）：31kg

LZZBJ9-24/185b/3W2 电流互感器

额定一次电流 Rated primary current (A)	额定短时热电流 Ith (kA/1s)	额定动稳定电流 Idyn (kA peak)	准确级组合 Accuracy classes combination	额定输出 Rated output(VA)			
				0.2S, 0.5S	0.2	0.5	5P
600-2500	63	160	0.2S/0.5 0.2/0.5 0.2S/5P10 0.5S/5P10 0.2/5P10 0.5/5P10	10	15	15	15
600-1000	80	200	0.2S/5P20 0.5S/5P20 0.2/5P20 0.5/5P20 0.2/0.5/5P10				
1250-2500	100	250	0.2S/5P20 0.5S/5P20 0.2/5P20 0.5/5P20	10	15	15	15

外形尺寸图 Overall dimensions

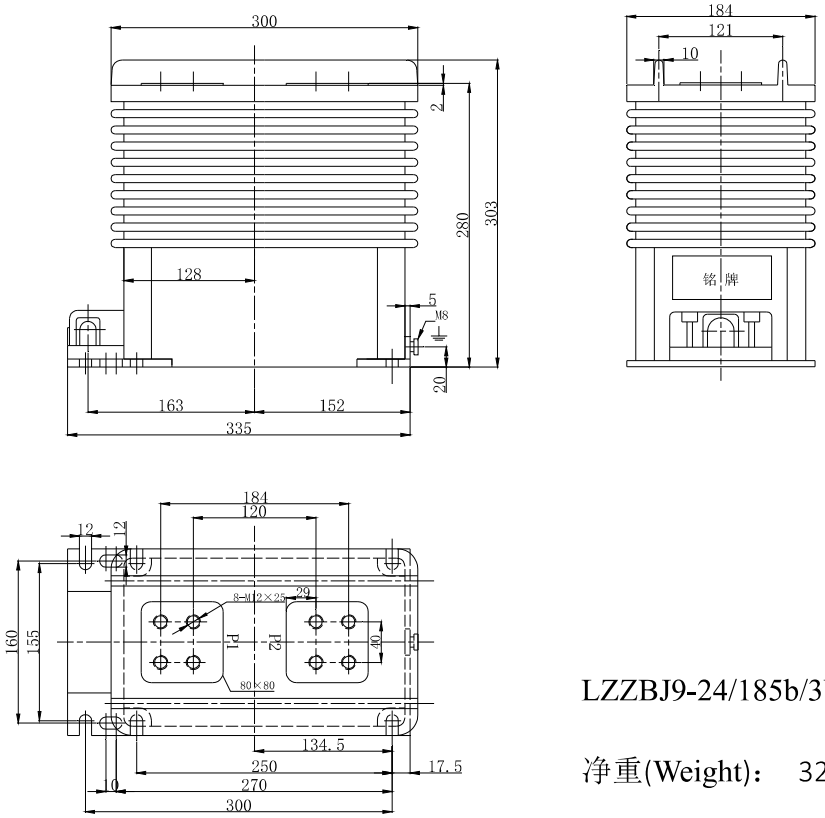

LZZBJ9-24/185b/3W2

净重(Weight)： 32kg

LZZBJ9-24/185b/3W2G-2 电流互感器

额定一次电流 Rated primary current (A)	额定短时热电流 Ith (kA/1s)	额定动稳定电流 Idyn (kA peak)	准确级组合 Accuracy classes combination	额定输出 Rated output(VA)			
				0.2S, 0.5S	0.2	0.5	5P
20-40	250I1n	625I1n	0.2S/0.5 0.2/0.5 0.2S/5P10 0.5S/5P10 0.2/5P10 0.5/5P10	10	15	15	15
50-100	300I1n	750I1n					
150-250	40	100					
300-1250	63	160					
100-200	150I1n	375I1n	0.2S/5P20 0.5S/5P20 0.2/5P20 0.5/5P20 0.2/0.5/5P10				
300-500	40	100					
600-1000	80	200					
1250	100	250	0.2S/5P20 0.5S/5P20 0.2/5P20 0.5/5P20	10	15	15	15

外形尺寸图 Overall dimensions

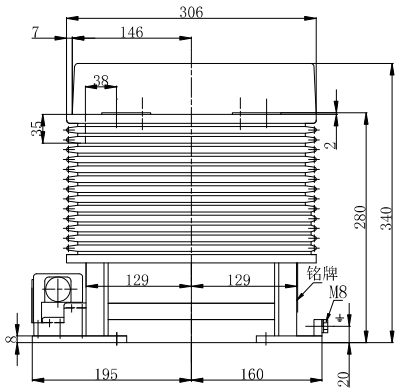

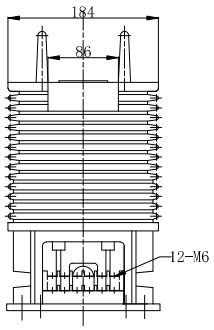

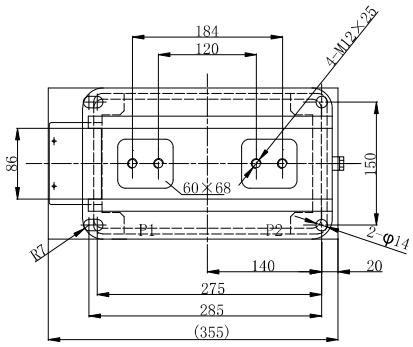

LZZBJ9-24/185b/3W2G-2
净重（Weight）：38kg

LZZBJ9-24/185b/3W2G 电流互感器

额定一次电流 Rated primary current (A)	额定短时热电流 Ith (kA/1s)	额定动稳定电流 Idyn (kA peak)	准确级组合 Accuracy classes combination	额定输出 Rated output(VA)			
				0.2S, 0.5S	0.2	0.5	5P
600-2500	63	160	0.2S/0.5 0.2/0.5 0.2S/5P10 0.5S/5P10 0.2/5P10 0.5/5P10	10	15	15	15
600-1000	80	200	0.2S/5P20 0.5S/5P20 0.2/5P20 0.5/5P20 0.2/0.5/5P10				
1250-2500	100	250	0.2S/5P20 0.5S/5P20 0.2/5P20 0.5/5P20	10	15	15	15

外形尺寸图 Overall dimensions

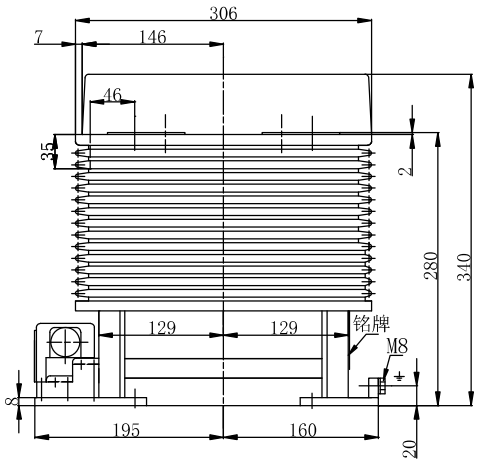

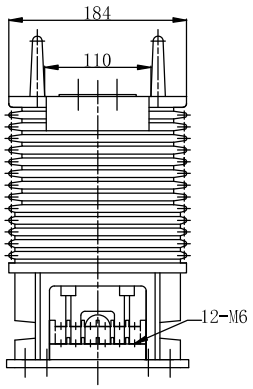

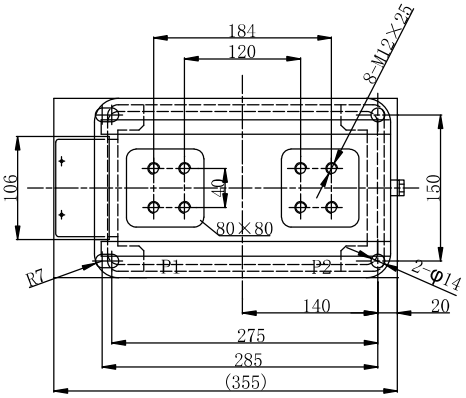

LZZBJ9-24/185b/3W2G
净重（Weight）：40kg

LZZBJ9-24/185b/5W2-2 电流互感器

额定一次电流 Rated primary current (A)	额定短时热电流 Ith(kA/1s)	额定动稳定电流 Idyn(kA peak)	准确级组合 Accuracy classes combination	额定输出 Rated secondary output(VA)
20-150	150I1n	375I1n	0.2S/0.5/10P15 0.2/0.5/5P15 0.2/5P10/5P15 0.5/5P10/5P15 0.2S/5P15/5P15 0.5S/5P15/5P15	20/20/20 20/20/20 20/20/20 20/20/20 20/15/20 20/15/20
200	31.5	80		
300-500	40	100		
600-800	63	160		
1000-1250	80	200		

外形尺寸图

Overall dimensions

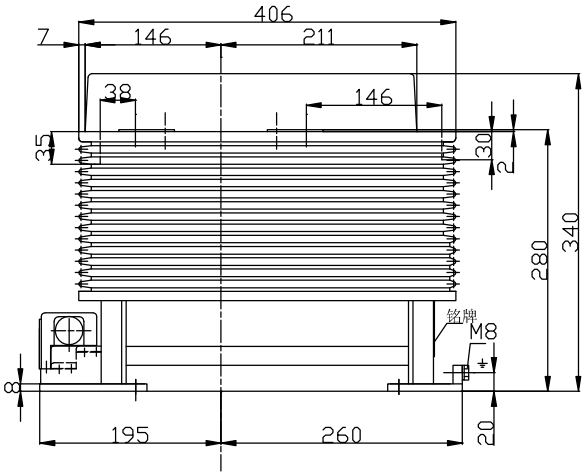

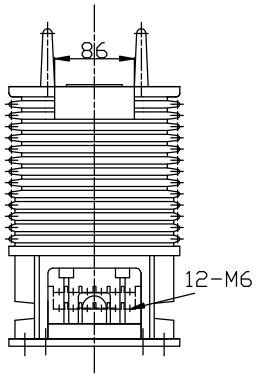

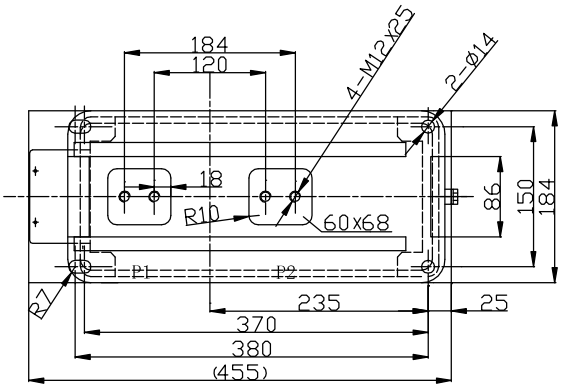

LZZBJ9-24/185b/5W2-2

净重（Weight）：62kg

LZZBJ9-24/185b/5W2 电流互感器

额定一次电流 Rated primary current (A)	准确级组合 Accuracy classes combination	额定输出 Rated secondary output(VA)	额定短时热电流 Ith(kA/1s)	额定动稳定电流 Idyn(kA peak)
1500-2000	0.2S/0.5/10P15	20/20/30	100	250
	0.2/0.5/5P15	20/20/30		
	0.2/5P15/5P15	20/20/25		
	0.5/5P15/5P15	20/20/25		
	0.2S/5P20/5P20	20/20/20		
	0.5S/5P20/5P20	20/20/20		
2500	0.2S/0.5/10P15	20/20/30	100	250
	0.2/0.5/5P15	20/20/30		
	0.2/5P15/5P15	20/20/25		
	0.5/5P15/5P15	20/20/25		
	0.2S/5P20/5P20	20/15/15		
	0.5S/5P20/5P20	20/15/15		

外形尺寸图 Overall dimensions

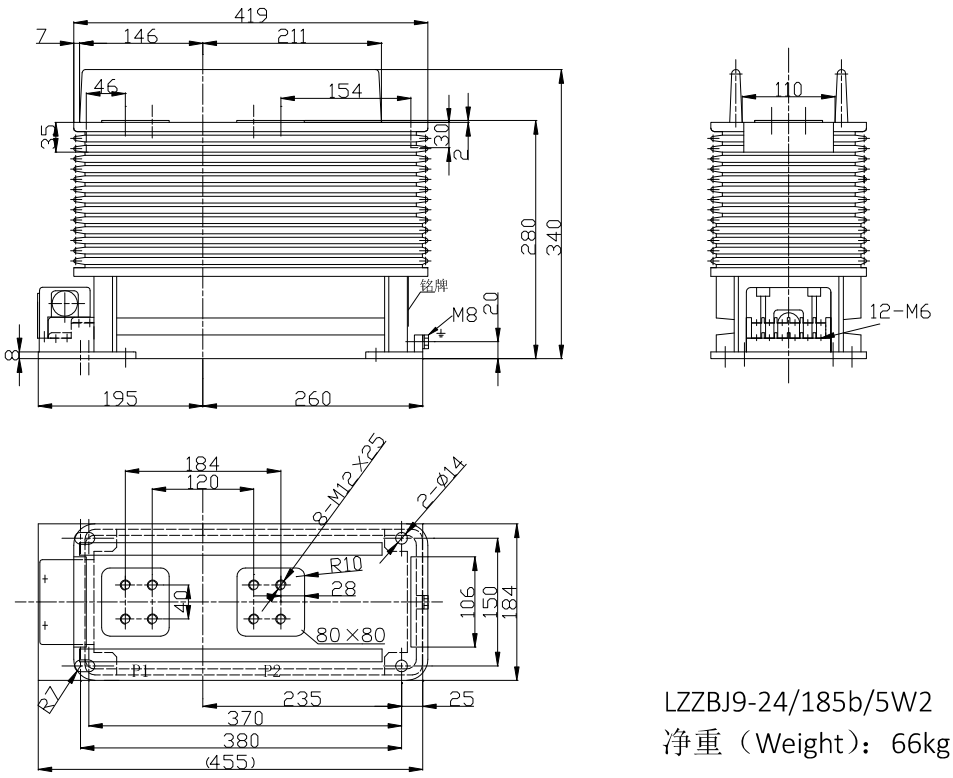

LZZBJ9-24/185b/5W2
净重（Weight）：66kg

LZZBJ9-24/185J/3-2 电流互感器

额定一次电流 Rated primary current (A)	额定短时热电流 Ith (kA/1s)	额定动稳定电流 Idyn (kA peak)	准确级组合 Accuracy classes combination	额定输出 Rated output(VA)			
				0.2S, 0.5S	0.2	0.5	5P
20-40	250I1n	625I1n	0.2S/0.5 0.2/0.5 0.2S/5P10 0.5S/5P10 0.2/5P10 0.5/5P10	10	15	15	15
50-100	300I1n	750I1n					
150-250	40	100					
300-2500	63	160					
100-200	150I1n	375I1n	0.2S/5P20 0.5S/5P20 0.2/5P20 0.5/5P20 0.2/0.5/5P10				
300-500	40	100					
600-1000	80	200					
1250	100	250	0.2S/5P20 0.5S/5P20 0.2/5P20 0.5/5P20	10	15	15	15

外形尺寸图

Overall dimensions

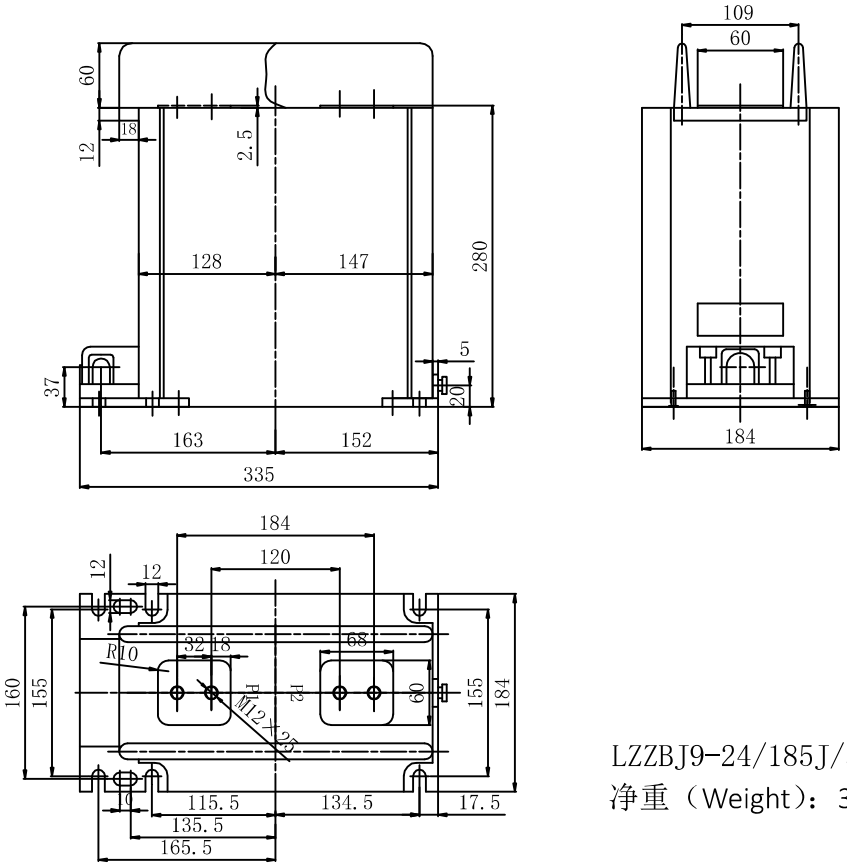

LZZBJ9-24/185J/3-2

净重（Weight）：36kg

LZZBJ9-24/185J/3 电流互感器

额定一次电流 Rated primary current (A)	额定短时热电流 Ith (kA/1s)	额定动稳定电流 Idyn (kA peak)	准确级组合 Accuracy classes combination	额定输出 Rated output(VA)			
				0.2S, 0.5S	0.2	0.5	5P
20-40	250I1n	625I1n	0.2S/0.5 0.2/0.5 0.2S/5P10 0.5S/5P10 0.2/5P10 0.5/5P10	10	15	15	15
50-100	300I1n	750I1n					
150-250	40	100					
300-2500	63	160					
100-200	150I1n	375I1n	0.2S/5P20 0.5S/5P20 0.2/5P20 0.5/5P20 0.2/0.5/5P10				
300-500	40	100					
600-1000	80	200					
1250-2500	100	250	0.2S/5P20 0.5S/5P20 0.2/5P20 0.5/5P20	10	15	15	15

外形尺寸图

Overall dimensions

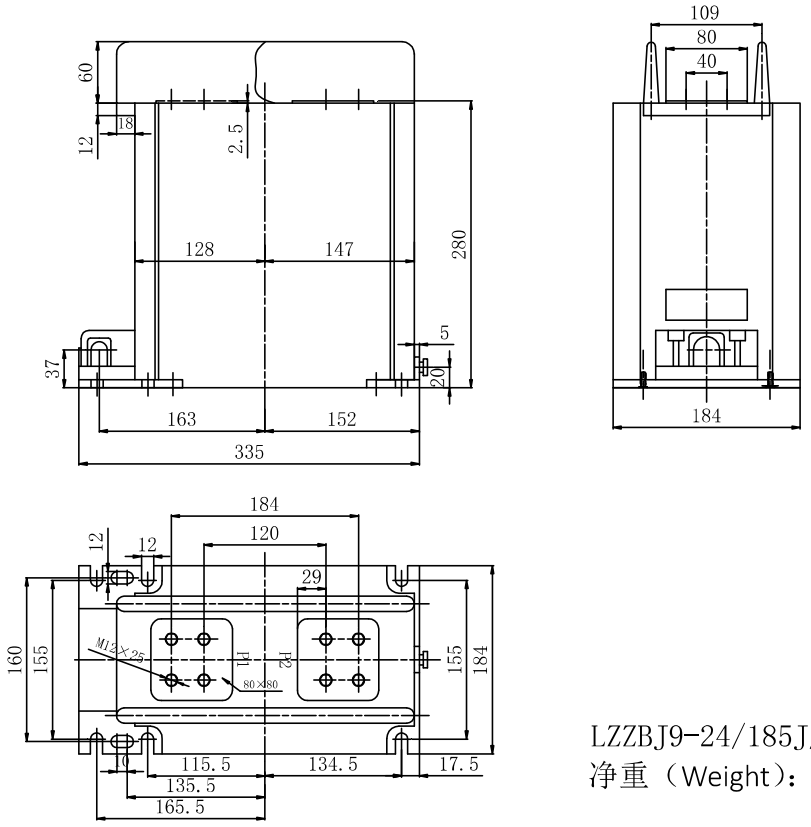

LZZBJ9-24/185J/3

净重（Weight）：36kg

LZZBJ9-24/195W/3-2 电流互感器

额定一次电流 Rated primary current（A）	准确级组合 Accuracy classes combination	额定输出 Rated output(VA)				额定短时热电流 Rated short-time thermal current Ith(KA/1s)	额定动稳定电流 Rated dynamic current Idyn (KA peak)
		0.2S/0.5	0.2	0.5	5P		
20-40	0.2S/0.5 0.2/0.5 0.2S/5P10 0.5S/5P10 0.2/5P10 0.5/5P10	10	15	15	15	25Ⅰ1n	62Ⅰ1n
50-100						30Ⅰ1n	75Ⅰ1n
150-250						40	100
300-1250						63	160
10-200	0.2S/0.5 0.2S/5P10 0.5S/5P10 0.2/5P10 0.5/5P10 0.2S/0.5/5P10	10	15	15	15	15Ⅰ1n	37Ⅰ1n
300-500						40	100
600-1000						80	200
1250	0.2S/5P20 0.2/5P20 0.5S/5P20 0.5/5P20	10	15	15	15	100	250

外形尺寸图 Overall dimensions

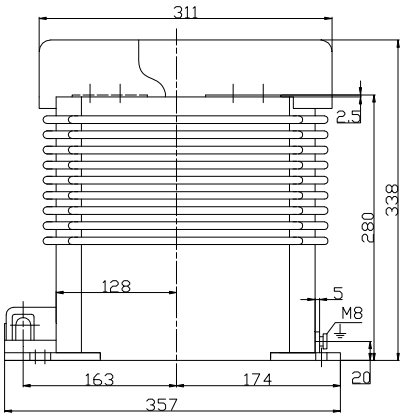

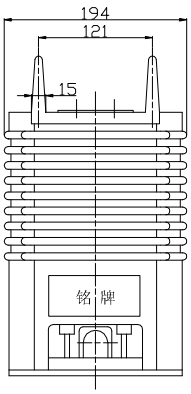

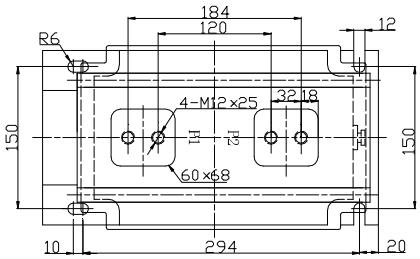

LZZBJ9-24/195W/3-2
净重（Weight）：34kg

LZZBJ9-24/195W/3 电流互感器

额定一次电流 Rated primary current（A）	准确级组合 Accuracy classes combination	额定输出 Rated output(VA)				额定短时热电流 Rated short-time thermal current Ith(KA/1s)	额定动稳定电流 Rated dynamic current Idyn (KA peak)
		0.2S/0.5	0.2	0.5	5P		
20-40	0.2S/0.5 0.2/0.5 0.2S/5P10 0.5S/5P10 0.2/5P10 0.5/5P10	10	15	15	15	250In	625In
50-100						300In	750In
150-250						40	100
300-2500						63	160
10-200	0.2S/0.5 0.2S/5P10 0.5S/5P10 0.2/5P10 0.5/5P10 0.2S/0.5/5P10	10	15	15	15	150In	375In
300-500						40	100
600-1000						80	200
1250-2500	0.2S/5P20 0.2/5P20 0.5S/5P20 0.5/5P20	10	15	15	15	100	250

外形尺寸图 Overall dimensions

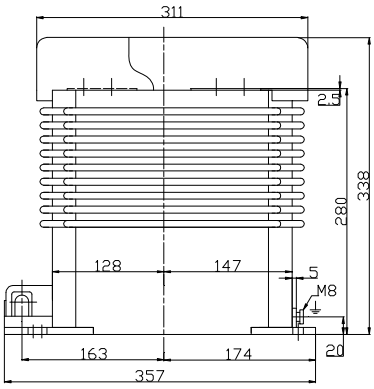

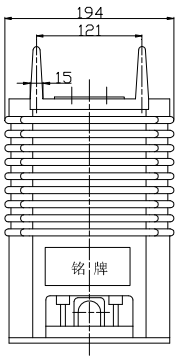

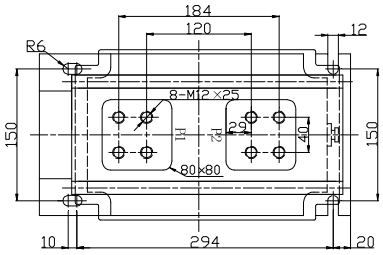

LZZBJ9-24/195W/3
净重（Weight）：37kg

LZZBJ9-24/195W/5-2 电流互感器

额定一次电流 Rated primary current(A)	准确级组合 Accuracy classes combination	额定输出 Rated output(VA)				额定短时热电流 Rated short-time thermal current(KA/1s)	额定动稳定电流 Rated dynamic current(KA)
		0.2S/0.5	0.2	0.5	5P		
20-40	0.2S/0.5/5P10 0.2/0.5/5P10 0.2S/5P10/5P10 0.5S/5P10/5P10 0.2/5P10/5P10 0.5/5P10/5P10	10	15	15	15	250I1n	625I1n
50-100						300I1n	750I1n
150-250						40	100
300-1250						63	160
10-200	0.2S/5P20/5P10 0.2/5P20/5P10 0.5S/5P20/5P10 0.5/5P20/5P10 0.2S/0.5/5P10/5P10	10	15	15	15	150I1n	375I1n
300-500						40	100
600-1000						80	200
1250	0.2S/5P20/5P10 0.2/5P20/5P10 0.5S/5P20/5P10 0.5/5P20/5P10	10	15	15	15	100	250

外形尺寸图 Overall dimensions

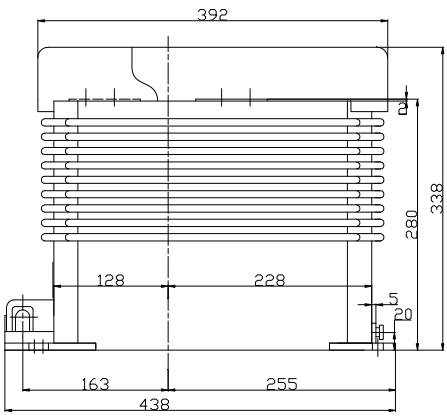

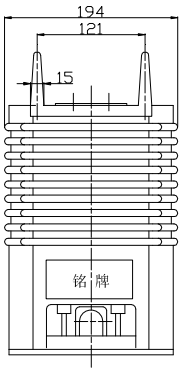

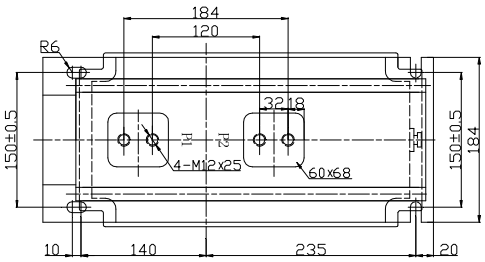

LZZBJ9-24/195W/5-2
净重（Weight）：48.5kg

LZZBJ9-24/195W/5 电流互感器

额定一次电流 Rated primary current（A）	准确级组合 Accuracy classes combination	额定输出 Rated output(VA)				额定短时热电流 Rated short-time thermal current(KA/1s)	额定动稳定电流 Rated dynamic current(KA)
		0.2S/0.5	0.2	0.5	5P		
20-40	0.2S/0.5/5P10 0.2/0.5/5P10 0.2S/5P10/5P10 0.5S/5P10/5P10 0.2/5P10/5P10 0.5/5P10/5P10	10	15	15	15	250I1n	625I1n
50-100						300I1n	750I1n
150-250						40	100
300-2500						63	160
10-200	0.2S/5P20/5P10 0.2/5P20/5P10 0.5S/5P20/5P10 0.5/5P20/5P10 0.2S/0.5/5P10/5P10	10	15	15	15	150I1n	375I1n
300-500						40	100
600-1000						80	200
1250-2500	0.2S/5P20/5P10 0.2/5P20/5P10 0.5S/5P20/5P10 0.5/5P20/5P10	10	15	15	15	100	250

外形尺寸图 Overall dimensions

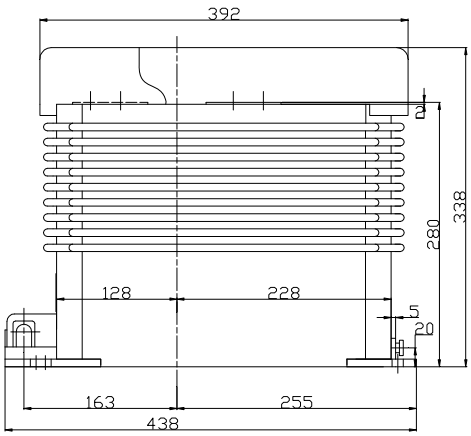

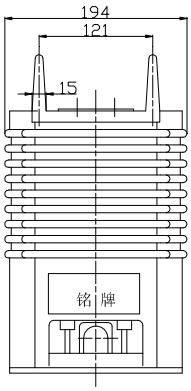

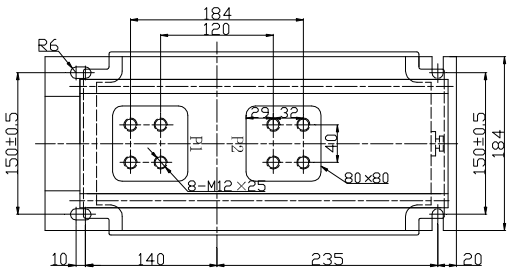

LZZBJ9-24/195W/5
净重（Weight）：55kg

LZZBJ9-24/200h/2W2(LZZBJ9-12/200h/2W2)电流互感器

型号 Type	额定一次电流 Rated primary current (A)	准确级组合 Accuracy classes combination	额定输出 Rated output (VA)	额定短时热电流 Rated short-time thermal current (kA/1s)	额定动稳定电流 Rated dynamic current (kA)
LZZBJ9-24/200h/2W2 LZZBJ9-12/200h/2W2	20，30，40，50	0.2	10	300I1n	750I1n
		0.5	15		
		0.2/5P15	7.5/5		
		0.5/5P15	10/5		
	75	0.2	15	31.5	80
		0.5	20		
		0.2/5P15	10/5		
		0.5/5P15	10/5		
	100	0.2	30	31.5	80
		0.5	30		
		0.2/5P15	10/7.5		
		0.5/5P15	10/7.5		
	150	0.2	30	31.5	80
		0.5	30		
		0.2/5P10	10/15		
		0.2/5P15	10/7.5		
		0.5/5P10	10/15		
		0.5/5P15	10/7.5		
	200，300	0.2	30	45	112.5
		0.5	40		
		0.2/5P10	10/15		
		0.2/5P15	10/10		
		0.5/5P10	10/15		
		0.5/5P15	10/10		
	400，500	0.2	30	63	157.5
		0.5	40		
		0.2/5P10	10/15		
		0.2/5P15	10/10		
		0.5/5P10	15/15		
		0.5/5P15	15/10		
	600，800	0.2	30	63	157.5
		0.5	40		
		0.2/5P10	10/15		
		0.2/5P15	10/10		
		0.5/5P10	20/15		
		0.5/5P15	20/10		

外形尺寸图

Overall dimensions

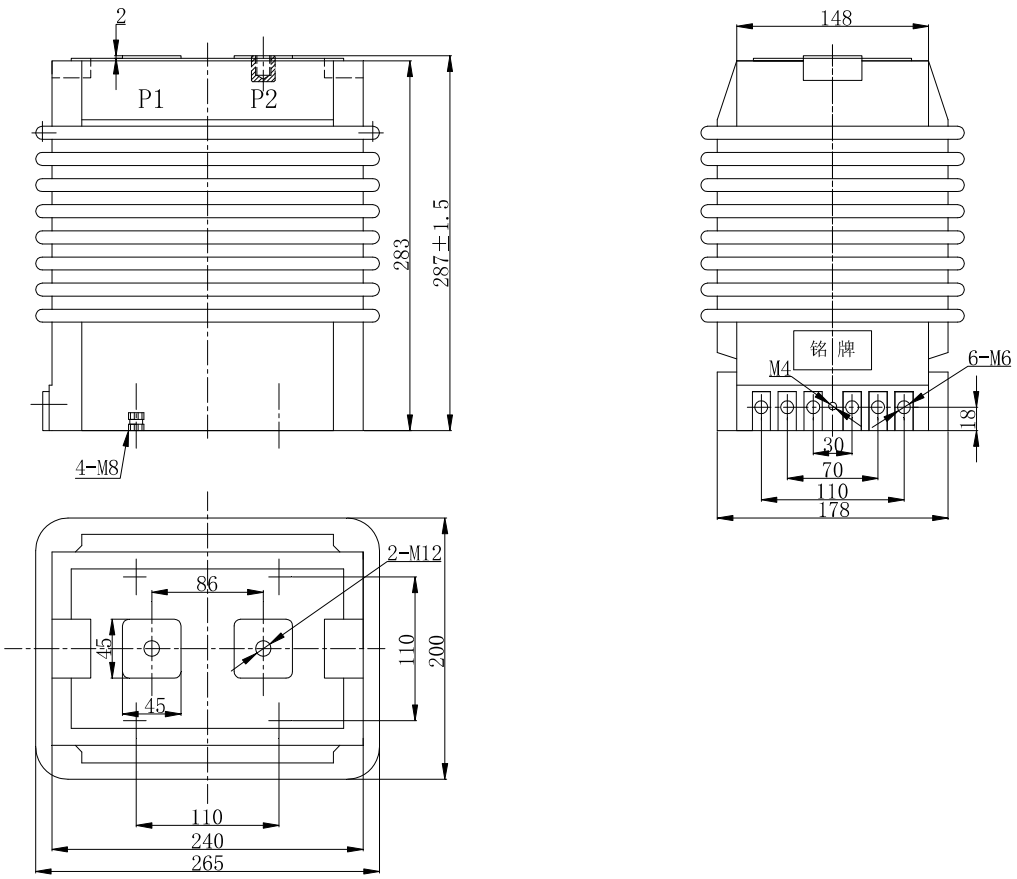

LZZBJ9-24/200h/2W2(LZZBJ9-12/200h/2W2)

净重(Weight)：41kg

LZZBJ9-24/220b/4-2 电流互感器

额定一次电流 Rated primary current (A)	额定短时热电流 Ith (kA/1s)	额定动稳定电流 Idyn (kA peak)	准确级组合 Accuracy classes combination	额定输出 Rated output(VA)
20-150	150I1n	375I1n	0.2S/0.5/10P15 0.2/0.5/5P15 0.2/5P10/5P15 0.5/5P10/5P15 0.2S/5P15/5P15 0.5S/5P15/5P15	20/20/20 20/20/20 20/20/20 20/20/20 20/15/20 20/15/20
200	31.5	80		
300-500	40	100		
600-800	63	160		
1000-1250	80	200		

外形尺寸图 Overall dimensions

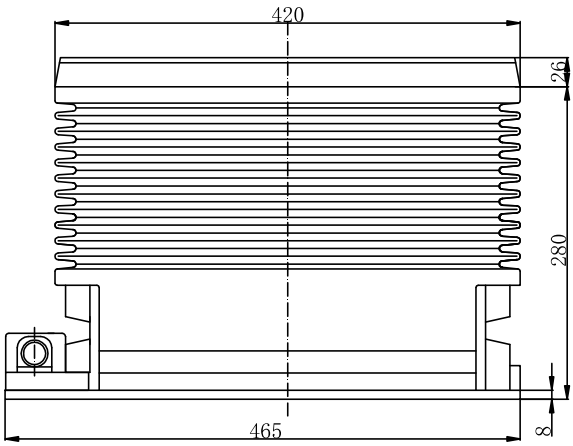

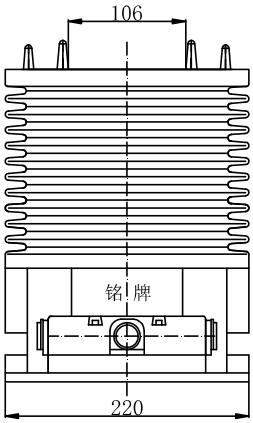

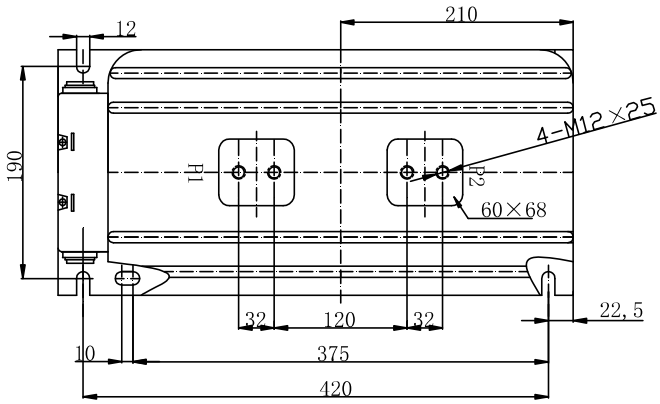

20-1250A

LZZBJ9-24/220b/4-2

净重（Weight）：68kg

LZZBJ9-24/220b/4 电流互感器

额定一次电流 Rated primary current (A)	额定短时热电流 Ith (kA/1s)	额定动稳定电流 Idyn (kA peak)	准确级组合 Accuracy classes combination	额定输出 Rated output(VA)
1500-2000	100	250	0.2S/0.5/10P15 0.2/0.5/5P15 0.2/5P15/5P15 0.5/5P15/5P15 0.2S/5P20/5P20 0.5S/5P20/5P20	20/20/30 20/20/30 20/20/25 20/20/25 20/20/20 20/20/20
2500-3150	100	250	0.2S/0.5/10P15 0.2/0.5/5P15 0.2/5P15/5P15 0.5/5P15/5P15 0.2S/5P20/5P20 0.5S/5P20/5P20	20/20/30 20/20/30 20/20/25 20/20/25 20/15/15 20/15/15

外形尺寸图 Overall dimensions

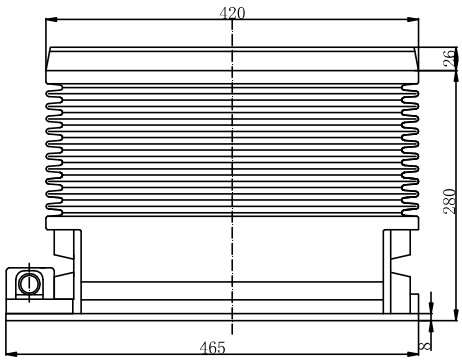

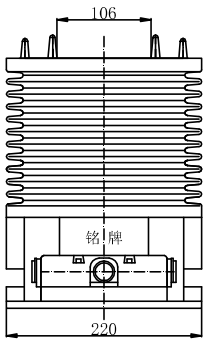

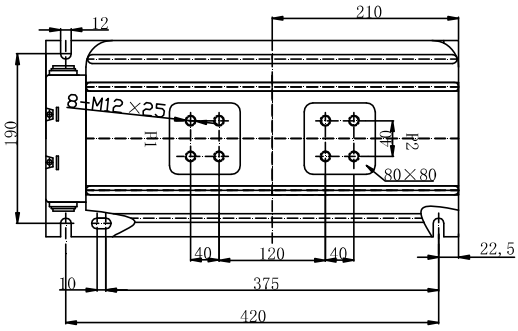

1500-3150 A

LZZBJ9-24/220b/4
净重（Weight）：68kg

LZZBJ9-24/185J/3-2 代电流互感器

外形尺寸图 Overall dimensions

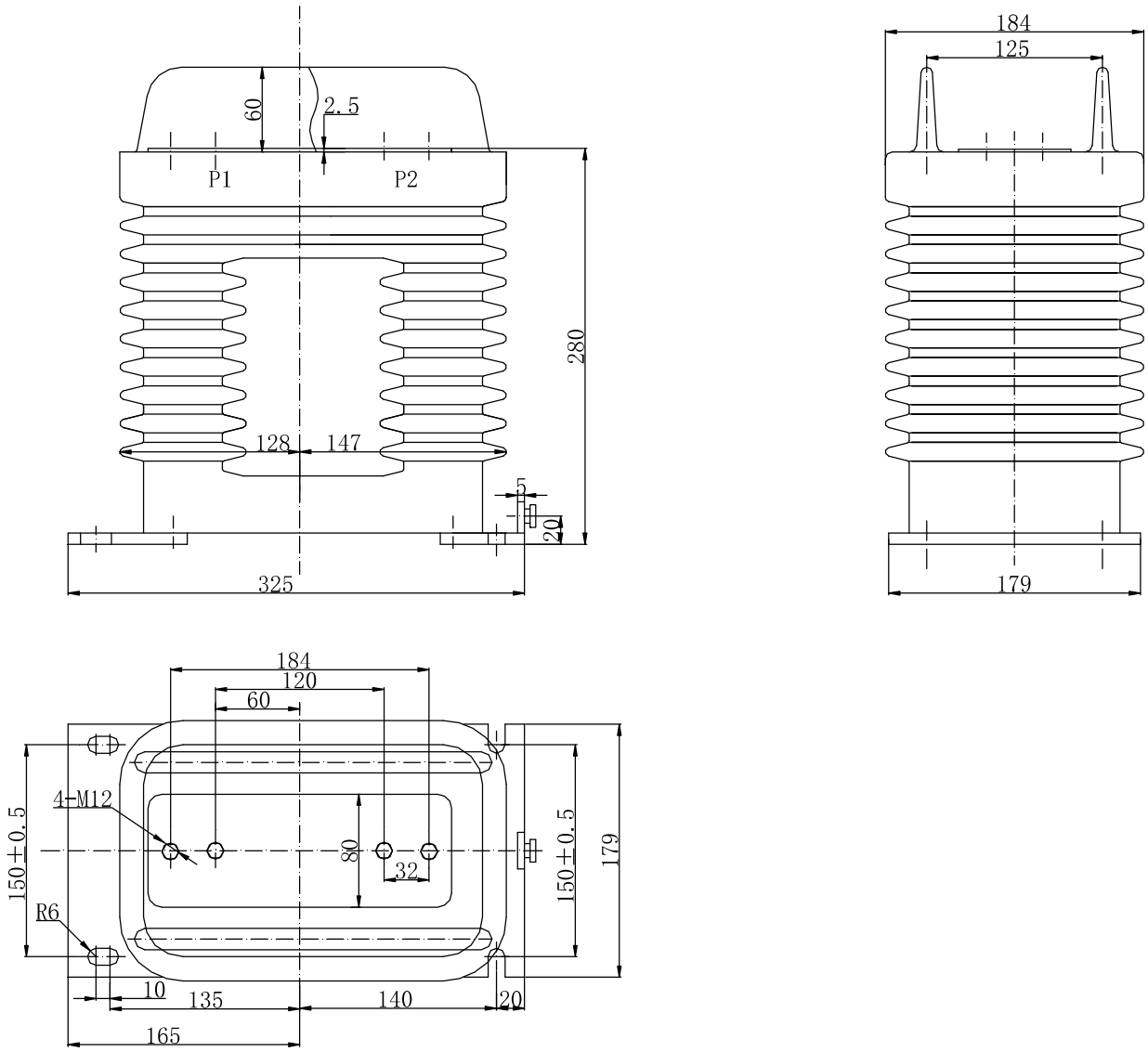

LZZBJ9-24/185J/3-2 代电流互感器
额定一次电流：1250A
净重（Weight）：21kg

LZZBJ9-24/185J/3 代电流互感器

外形尺寸图 Overall dimensions

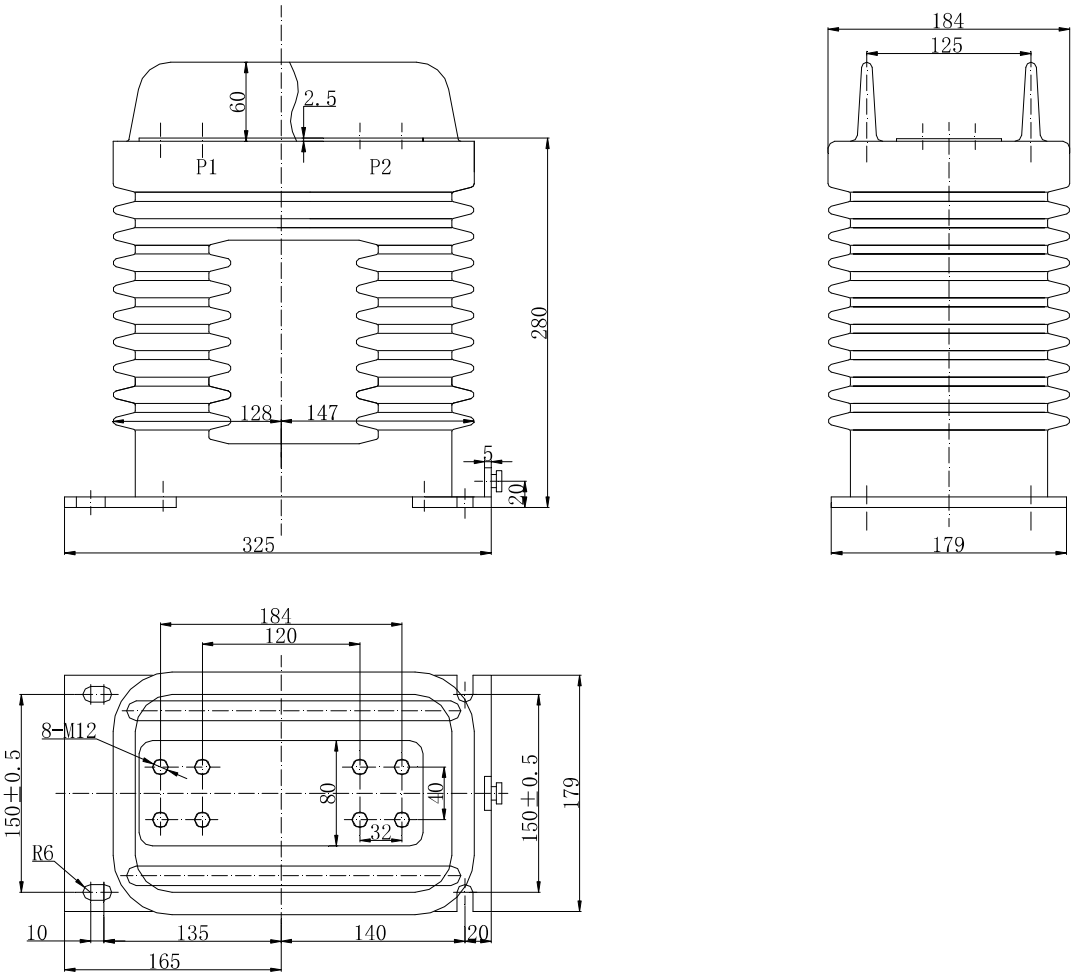

LZZBJ9-24/185J/3 代电流互感器
额定一次电流：2500A
净重（Weight）：22kg

一、户内浇注电流互感器

35kv 电流互感器

LZZB2-27.5 型电流互感器

型号 Type	额定一次电流 Rated primary current (A)	准确级组合 Accuracy classes combination	额定输出 Rated output (VA)	额定短时热电流 Rated short-time thermal current (kA/1s)	额定动稳定电流 Rated dynamic current (kA)
LZZB2-27.5	10	0.2S/5P10	15/50	3	8
		0.2S/5P20	15/20	3	8
		0.5/5P10	25/60	3	8
		0.5/5P20	25/30	3	8
	20	0.2S/5P10	15/50	5	13
		0.2S/5P20	15/20	5	13
		0.5/5P10	25/60	5	13
		0.5/5P20	25/30	5	13
	25-40 （区间）	0.2S/5P10	15/50	10	25
		0.2S/5P20	15/25	10	25
		0.5/5P10	25/60	10	25
		0.5/5P20	25/30	10	25
	50-60 （区间）	0.2S/5P10	15/50	20	50
		0.2S/5P20	15/20	20	50
		0.5/5P10	25/60	20	50
		0.5/5P20	25/30	20	50
	75	0.2S/5P10	15/80	25	63
		0.2S/5P20	15/40	25	63
		0.5/5P10	30/80	25	63
		0.5/5P20	30/40	25	63
	100-150 （区间）	0.2S/5P10	15/60	40	100
		0.2S/5P20	15/30	40	100
		0.5/5P10	25/60	40	100
		0.5/5P20	25/30	40	100
	200-630 （区间）	0.2S/5P10	15/80	63	160
		0.2S/5P20	15/40	63	160
		0.5/5P10	40/80	63	160
		0.5/5P20	40/40	63	160
	750-2000 （区间）	0.2S/5P10	30/80	100	250
		0.2S/5P20	30/50	100	250
		0.5/5P10	40/80	100	250
		0.5/5P20	40/50	100	250

外形尺寸图 Overall dimensions

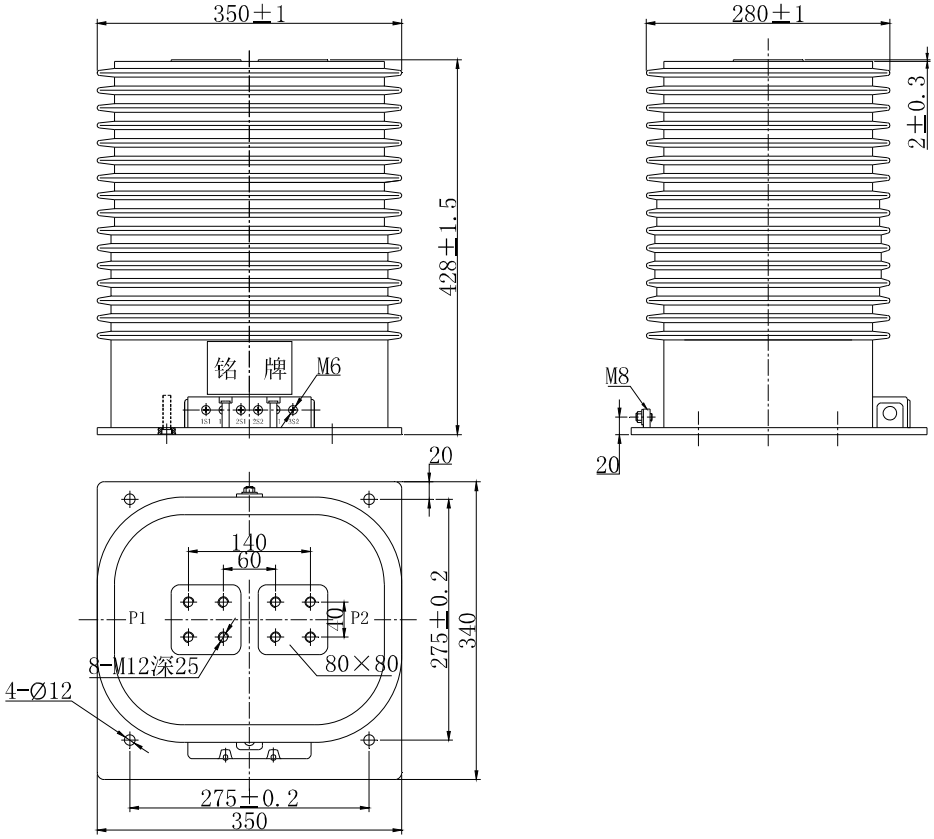

LZZB2-27.5　　净重（Weight）：85kg

LZZBJ4-35A 型电流互感器

型号 Type	额定一次电流 Rated primary current (A)	准确级组合 Accuracy classes combination	额定输出 Rated output (VA)	额定短时热电流 Rated short-time thermal current (kA/1s)	额定动稳定电流 Rated dynamic current (kA)
LZZBJ4-35A	100～600（区间）	0.2(S)/5P10/5P10	100/100/100	100I1n	250I1n
		0.2(S)/5P20/5P20	50/50/50	100I1n	250I1n
		0.2(S)/5P30/5P30	30/30/30	100I1n	250I1n
		0.2(S)/0.5(S)/5P10/5P10	80/80/80/80	100I1n	250I1n
		0.2(S)/0.5(S)/5P20/5P20	40/40/40/40	100I1n	250I1n
		0.2(S)/0.5(S)/5P30/5P30	20/20/20/20	100I1n	250I1n
	750～800（区间）	0.2(S)/5P10/5P10	100/100/100	80	200
		0.2(S)/5P20/5P20	50/50/50	80	200
		0.2(S)/5P30/5P30	30/30/30	80	200
		0.2(S)/0.5(S)/5P10/5P10	80/80/80/80	80	200
		0.2(S)/0.5(S)/5P20/5P20	40/40/40/40	80	200
		0.2(S)/0.5(S)/5P30/5P30	20/20/20/20	80	200
	1000	0.2(S)/5P10/5P10	120/120/120	80	200
		0.2(S)/5P20/5P20	70/70/70	80	200
		0.2(S)/5P30/5P30	40/40/40	80	200
		0.2(S)/0.5(S)/5P10/5P10	100/100/100/100	80	200
		0.2(S)/0.5(S)/5P20/5P20	50/50/50/50	80	200
		0.2(S)/0.5(S)/5P30/5P30	30/30/30/30	80	200
	1250～1600（区间）	0.2(S)/5P10/5P10	150/150/150	100	250
		0.2(S)/5P20/5P20	80/80/80	100	250
		0.2(S)/5P30/5P30	50/50/50	100	250
		0.2(S)/0.5(S)/5P10/5P10	120/120/120/120	100	250
		0.2(S)/0.5(S)/5P20/5P20	60/60/60/60	100	250
		0.2(S)/0.5(S)/5P30/5P30	35/35/35/35	100	250
	200-400	0.2S/0.5/5P20/5P20	30/30/30/30	31.5	80
	200-300-400	0.2S/0.5/5P20/5P20	30/30/30/30	31.5	80
	300-500	0.2S/0.5/5P20/5P20	30/30/30/30	45	113
	300-400-500	0.2S/0.5/5P20/5P20	30/30/30/30	45	113
	300-600	0.2S/0.5/5P20/5P20	30/30/30/30	55	138
	400-600	0.2S/0.5/5P20/5P20	30/30/30/30	55	138
	500-600	0.2S/0.5/5P20/5P20	30/30/30/30	55	138
	300-400-600	0.2S/0.5/5P20/5P20	30/30/30/30	55	138
	300-500-600	0.2S/0.5/5P20/5P20	30/30/30/30	55	138
	400-500-600	0.2S/0.5/5P20/5P20	30/30/30/30	55	138
	400-800	0.2S/0.5/5P20/5P20	30/30/30/30	80	200
	500-800	0.2S/0.5/5P20/5P20	30/30/30/30	80	200
	600-800	0.2S/0.5/5P20/5P20	30/30/30/30	80	200
	400-500-800	0.2S/0.5/5P20/5P20	30/30/30/30	80	200
	400-600-800	0.2S/0.5/5P20/5P20	30/30/30/30	80	200
	500-600-800	0.2S/0.5/5P20/5P20	30/30/30/30	80	200
	600-800-1000	0.2S/0.5/5P20/5P20	30/30/30/30	80	200
	600-1200	0.2S/0.5/5P20/5P20	30/30/30/30	100	250
	800-1200	0.2S/0.5/5P20/5P20	30/30/30/30	100	250
	1000-1200	0.2S/0.5/5P20/5P20	30/30/30/30	100	250
	600-800-1200	0.2S/0.5/5P20/5P20	30/30/30/30	100	250
	600-1000-1200	0.2S/0.5/5P20/5P20	30/30/30/30	100	250
	800-1000-1200	0.2S/0.5/5P20/5P20	30/30/30/30	100	250

外形尺寸图 Overall dimensions

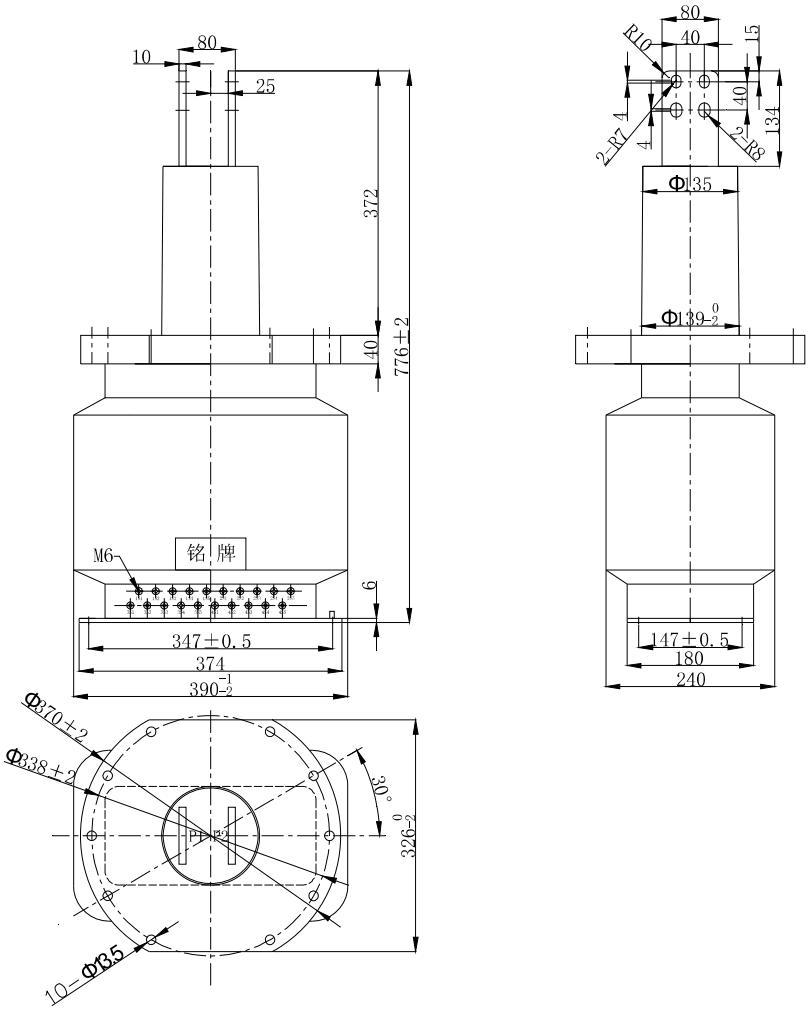

LZZBJ4-35A 净重（Weight）：100kg

LZZBJ5-35A 型电流互感器

型号 Type	额定一次电流 Rated primary current (A)	准确级组合 Accuracy classes combination	额定输出 Rated output (VA)	额定短时热电流 Rated short-time thermal current (kA/1s)	额定动稳定电流 Rated dynamic current (kA)
LZZBJ5-35A	100～600（区间）	0.2(S)/5P10/5P10	100/100/100	100I1n	250I1n
		0.2(S)/5P20/5P20	50/50/50	100I1n	250I1n
		0.2(S)/5P30/5P30	30/30/30	100I1n	250I1n
		0.2(S)/0.5(S)/5P10/5P10	80/80/80/80	100I1n	250I1n
		0.2(S)/0.5(S)/5P20/5P20	40/40/40/40	100I1n	250I1n
		0.2(S)/0.5(S)/5P30/5P30	20/20/20/20	100I1n	250I1n
	750～800（区间）	0.2(S)/5P10/5P10	100/100/100	80	200
		0.2(S)/5P20/5P20	50/50/50	80	200
		0.2(S)/5P30/5P30	30/30/30	80	200
		0.2(S)/0.5(S)/5P10/5P10	80/80/80/80	80	200
		0.2(S)/0.5(S)/5P20/5P20	40/40/40/40	80	200
		0.2(S)/0.5(S)/5P30/5P30	20/20/20/20	80	200
	1000	0.2(S)/5P10/5P10	120/120/120	80	200
		0.2(S)/5P20/5P20	70/70/70	80	200
		0.2(S)/5P30/5P30	40/40/40	80	200
		0.2(S)/0.5(S)/5P10/5P10	100/100/100/100	80	200
		0.2(S)/0.5(S)/5P20/5P20	50/50/50/50	80	200
		0.2(S)/0.5(S)/5P30/5P30	30/30/30/30	80	200
	1250～1600（区间）	0.2(S)/5P10/5P10	150/150/150	100	250
		0.2(S)/5P20/5P20	80/80/80	100	250
		0.2(S)/5P30/5P30	50/50/50	100	250
		0.2(S)/0.5(S)/5P10/5P10	120/120/120/120	100	250
		0.2(S)/0.5(S)/5P20/5P20	60/60/60/60	100	250
		0.2(S)/0.5(S)/5P30/5P30	35/35/35/35	100	250
	200-400	0.2S/0.5/5P20/5P20	30/30/30/30	31.5	80
	200-300-400	0.2S/0.5/5P20/5P20	30/30/30/30	31.5	80
	300-500	0.2S/0.5/5P20/5P20	30/30/30/30	45	113
	300-400-500	0.2S/0.5/5P20/5P20	30/30/30/30	45	113
	300-600	0.2S/0.5/5P20/5P20	30/30/30/30	55	138
	400-600	0.2S/0.5/5P20/5P20	30/30/30/30	55	138
	500-600	0.2S/0.5/5P20/5P20	30/30/30/30	55	138
	300-400-600	0.2S/0.5/5P20/5P20	30/30/30/30	55	138
	300-500-600	0.2S/0.5/5P20/5P20	30/30/30/30	55	138
	400-500-600	0.2S/0.5/5P20/5P20	30/30/30/30	55	138
	400-800	0.2S/0.5/5P20/5P20	30/30/30/30	80	200
	500-800	0.2S/0.5/5P20/5P20	30/30/30/30	80	200
	600-800	0.2S/0.5/5P20/5P20	30/30/30/30	80	200
	400-500-800	0.2S/0.5/5P20/5P20	30/30/30/30	80	200
	400-600-800	0.2S/0.5/5P20/5P20	30/30/30/30	80	200
	500-600-800	0.2S/0.5/5P20/5P20	30/30/30/30	80	200
	600-800-1000	0.2S/0.5/5P20/5P20	30/30/30/30	80	200
	600-1200	0.2S/0.5/5P20/5P20	30/30/30/30	100	250
	800-1200	0.2S/0.5/5P20/5P20	30/30/30/30	100	250
	1000-1200	0.2S/0.5/5P20/5P20	30/30/30/30	100	250
	600-800-1200	0.2S/0.5/5P20/5P20	30/30/30/30	100	250
	600-1000-1200	0.2S/0.5/5P20/5P20	30/30/30/30	100	250
	800-1000-1200	0.2S/0.5/5P20/5P20	30/30/30/30	100	250

外形尺寸图
Overall dimensions

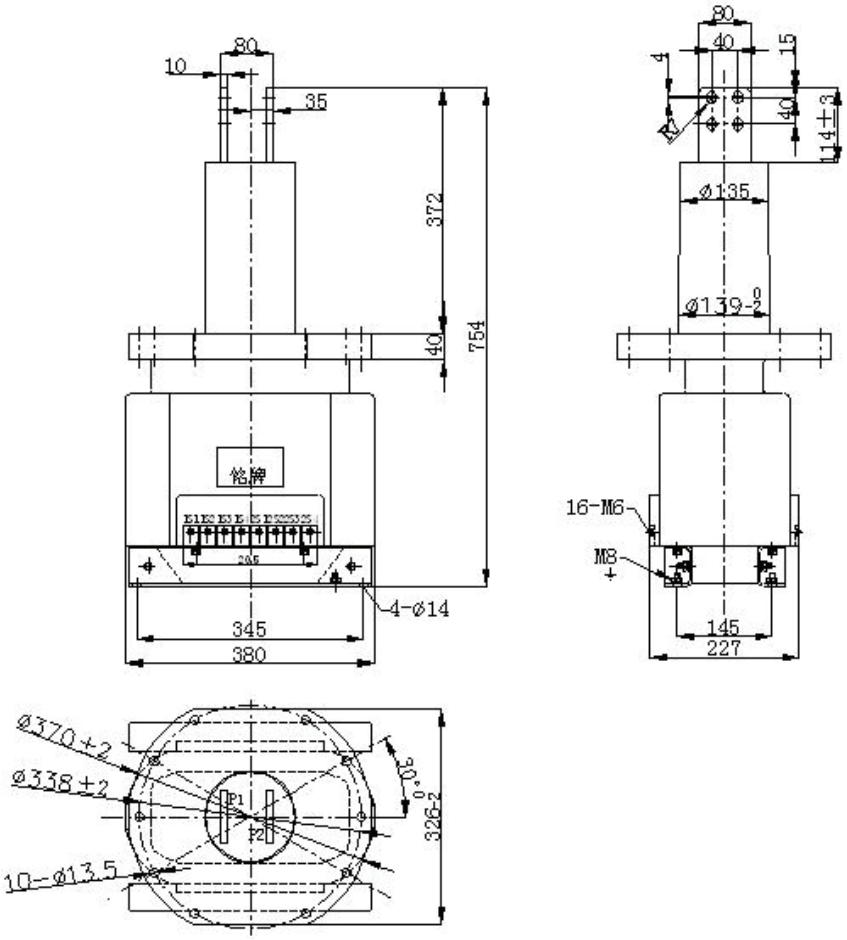

LZZBJ5-35A　　净重（Weight）：100kg

LZZBJ9-35D-2 电流互感器

额定一次电流 Rated primary current (A)	准确级组合 Accuracy classes combination	额定输出 Rated output (VA)	额定短时热电流 Rated short-time thermal current (kA/1s)	额定动稳定电流 Rated dynamic current (kA)
10	0.2，0.5，0.2S	15, 20	6	15
	0.2S/0.5, 0.5/10P10	15/15, 20/20	6	15
20	0.2	15, 20, 30	10	25
	0.5	15, 20, 30	10	25
	0.2S	15, 20, 30	10	25
	0.2/10P10	20/20	10	25
25	0.2	15, 20, 30	10	25
	0.5	15, 20, 30	10	25
	0.2S	15, 20, 30	10	25
	0.2/0.5	20/20	10	25
	0.2/5P10, 0.5/5P10	20/20，30/20	10	25
30	0.2	15, 20, 30	10	25
	0.5	15, 20, 30	10	25
	0.2S	15, 20, 30	10	25
	0.2/0.2	20/20	10	25
	0.2S/0.5	20/20, 20/30	10	25
	0.2/10P10	20/20, 30/20	10	25
	0.5/10P10	20/20, 30/20	10	25
	0.5/10P15	20/20, 30/20	10	25
40	0.2	15, 20, 30	10	25
	0.5	15, 20, 30	20	50
	0.2S	15, 20, 30	10	25
	0.2/0.2	20/20	10	25
	0.2S/0.5	20/20	10	25
	0.2/10P10, 0.5/10P10	20/20, 30/20	10	25
	0.5/10P15, 0.5/10P20	20/20, 30/20	10	25
50, 60	0.2	15, 20, 30	20	50
	0.5	15, 20, 30	25	63
	0.2S	15, 20, 30	20	50
	0.2/0.2, 0.2S/0.2	15/15, 20/20, 20/30	20	50
	0.2/0.5, 0.2S/0.5	15/15, 20/20, 20/30	20	50
	0.2/10P10, 0.5/10P10	20/20, 30/20	20	50
	0.2/10P15, 0.5/10P15	20/20, 30/20	10	25
	0.2/10P20, 0.5/10P20	20/20, 30/20	10	25
	0.2/0.5/10P10	15/15/15, 30/30/30	10	25
75	0.2	15, 20, 30	31.5	80
	0.5	15, 20, 30	31.5	80
	0.2S	15, 20, 30	31.5	80
	0.2/0.2, 0.2S/0.2	15/15, 20/20, 20/30	31.5	80
	0.2/0.5, 0.2S/0.5	15/15, 20/20, 20/30	31.5	80
	0.2/10P10, 0.5/10P10	20/20, 30/20	31.5	80
	0.2/10P15, 0.5/10P15	20/20, 30/20	25	63
	0.2/10P20, 0.5/10P20	20/20, 30/20	15	38
	0.2/0.5/10P10	15/15/15, 30/30/30	15	38
100	0.2	15, 20, 30	40	100
	0.5	15, 20, 30	40	100
	0.2S	15, 20, 30	40	100
	0.2/0.2, 0.2S/0.2	15/15, 20/20, 20/30	40	100
	0.2/0.5, 0.2S/0.5	15/15, 20/20, 20/30	40	100
	0.2/10P10, 0.5/10P10	20/20, 30/20	40	100
	0.2/10P15, 0.5/10P15	20/20, 30/20	20	50

额定一次电流 Rated primary current (A)	准确级组合 Accuracy classes combination	额定输出 Rated output (VA)	额定短时热电流 Rated short-time thermal current (kA/1s)	额定动稳定电流 Rated dynamic current (kA)
100	0.2/10P20, 0.5/10P20	20/20, 30/20	20	50
	0.2/0.5/10P10	15/15/15, 30/30/30	20	50
	0.5/10P10/10P20	15/15/15, 15/15/20	20	50
125	0.2, 0.2S, 0.5	15, 20	40	100
	0.2/10P10, 0.5/10P10	20/20, 30/20	40	100
	0.2/10P20, 0.5/10P20	20/20, 30/20	20	50
150	0.2	15, 20, 30	50	125
	0.5	15, 20, 30	50	125
	0.2S	15, 20, 30	50	125
	0.2/0.2, 0.2S/0.2	15/15, 20/20, 20/30	50	125
	0.2/0.5, 0.2S/0.5	15/15, 20/20, 20/30	50	125
	0.2/10P10, 0.5/10P10	20/20, 30/20	50	125
	0.2/10P15, 0.5/10P15	20/20, 30/20	50	125
	0.2/10P20, 0.5/10P20	20/20, 30/20	25	63
	0.2/0.5/10P10	15/15/15, 30/30/30	25	63
	0.5/10P10/10P20	15/15/15, 15/15/20	25	63
200，250	0.2	15, 20, 30	50	125
	0.5	15, 20, 30	50	125
	0.2S	15, 20, 30	50	125
	0.2/0.2, 0.2S/0.2	15/15, 20/20, 20/30	50	125
	0.2/0.5, 0.2S/0.5	15/15, 20/20, 20/30	50	125
	0.2/10P10, 0.5/10P10	20/20, 30/20	50	125
	0.2/10P15, 0.5/10P15	20/20, 30/20	31.5	80
	0.2/10P20, 0.5/10P20	20/20, 30/20	31.5	80
	0.2/0.5/10P10	15/15/15, 30/30/30	31.5	80
	0.5/10P10/10P20	15/15/15, 15/15/20	31.5	80
300, 400	0.2	15, 20, 30	63	160
	0.5	15, 20, 30	63	160
	0.2S	15, 20, 30	63	160
	0.2/0.2, 0.2S/0.2	15/15, 20/20, 20/30	63	160
	0.2/0.5, 0.2S/0.5	15/15, 20/20, 20/30	63	160
	0.2/10P10, 0.5/10P10	20/20, 30/20	63	160
	0.2/10P15, 0.5/10P15	20/20, 30/20	40	100
	0.2/10P20, 0.5/10P20	20/20, 30/20	40	100
	0.2/0.5/10P10	15/15/15, 30/30/30	40	100
	0.5/10P10/10P20	15/15/15, 15/15/20	40	100
500, 600, 630	0.2	15, 20, 30	63	160
	0.5	15, 20, 30	63	160
	0.2S	15, 20, 30	63	160
	0.2/0.2, 0.2S/0.2	15/15, 20/20, 20/30	63	160
	0.2/0.5, 0.2S/0.5	15/15, 20/20, 20/30	63	160
	0.2/10P10, 0.5/10P10	20/20, 30/20	63	160
	0.2/10P15, 0.5/10P15	20/20, 30/20	63	160
	0.2/10P20, 0.5/10P20	20/20, 30/20	63	160
	0.2/0.5/10P10	15/15/15, 30/30/30	63	160
	0.2/0.5/10P20	15/15/15, 30/30/30	63	160
	0.2/10P10/10P20	15/15/15, 30/30/30	63	160
	0.2/0.5/10P20/10P20	15/15/15/15	63	160
750，800	0.2	15，20，30，40	80	200
	0.5	15，20，30，40	80	200
	0.2S	15，20，30，50	80	200
	0.2/0.2, 0.2S/0.2	15/15，20/20，30/30，40/40	80	200
	0.2/0.5, 0.2S/0.5	15/15，20/20，30/30，40/40	80	200

额定一次电流 Rated primary current (A)	准确级组合 Accuracy classes combination	额定输出 Rated output (VA)	额定短时热电流 Rated short-time thermal current (kA/1s)	额定动稳定电流 Rated dynamic current (kA)
750，800	0.2/10P10, 0.5/10P10	15/15，40/40	80	200
	0.2/10P15, 0.5/10P15	15/15，40/40	80	200
	0.2/10P20, 0.5/10P20	15/15，40/40	80	200
	0.2/0.5/10P10	15/15/15，40/40/40	80	200
	0.2/0.5/10P20	15/15/15，40/40/40	80	200
	0.2/10P10/10P20	15/15/15，40/40/40	80	200
	0.2/0.5/10P20/10P20	20/20/20/20	80	200
1000-1250	0.2	15，20，30，40	100	250
	0.5	15，20，30，40	100	250
	0.2S	15，20，30，50	100	250
	0.2/0.2, 0.2S/0.2	15/15，20/20，30/30，40/40	100	250
	0.2/0.5, 0.2S/0.5	15/15，20/20，30/30，40/40	100	250
	0.2/10P10, 0.5/10P10	15/15，40/40	100	250
	0.2/10P15, 0.5/10P15	15/15，40/40	100	250
	0.2/10P20, 0.5/10P20	15/15，40/40	100	250
	0.2/0.5/10P10	15/15/15，40/40/40	100	250
	0.2/0.5/10P20	15/15/15，40/40/40	100	250
	0.2/10P10/10P20	15/15/15，40/40/40	100	250
	0.2/0.5/10P20/10P20	20/20/30/30	100	250

外形尺寸图
Overall dimensions

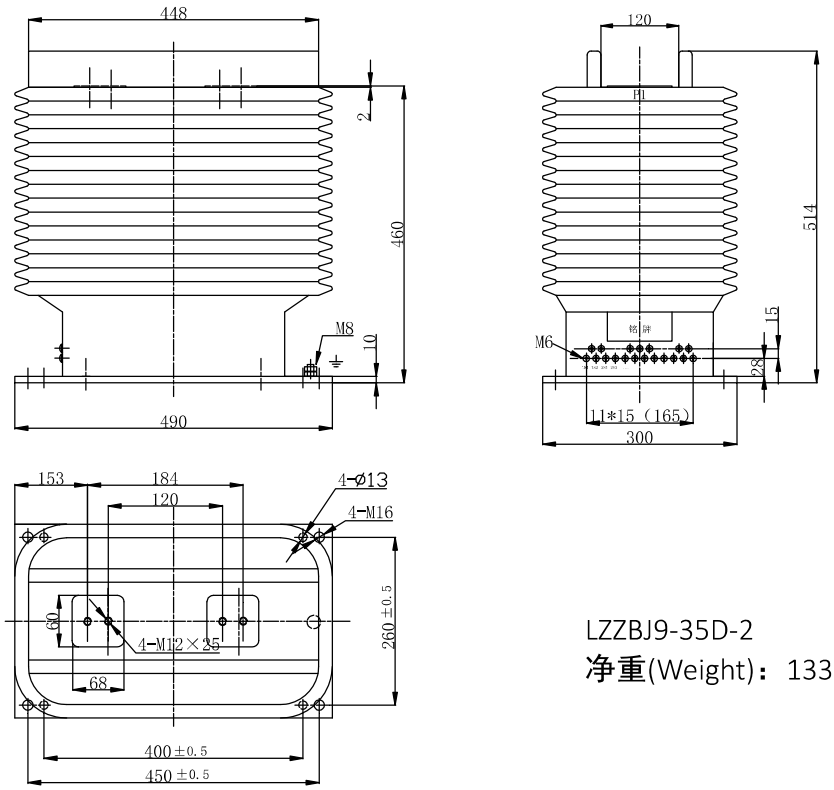

LZZBJ9-35D-2
净重(Weight)：133kg

LZZBJ9-35D 电流互感器

额定一次电流 Rated primary current (A)	准确级组合 Accuracy classes combination	额定输出 Rated output (VA)	额定短时热电流 Rated short-time thermal current (kA/1s)	额定动稳定电流 Rated dynamic current (kA)
10	0.2，0.5，0.2S	15, 20	6	15
	0.2S/0.5, 0.5/10P10	15/15, 20/20	6	15
20	0.2	15, 20, 30	10	25
	0.5	15, 20, 30	10	25
	0.2S	15, 20, 30	10	25
	0.2/10P10	20/20	10	25
25	0.2	15, 20, 30	10	25
	0.5	15, 20, 30	10	25
	0.2S	15, 20, 30	10	25
	0.2/0.5	20/20	10	25
	0.2/5P10, 0.5/5P10	20/20，30/20	10	25
30	0.2	15, 20, 30	10	25
	0.5	15, 20, 30	10	25
	0.2S	15, 20, 30	10	25
	0.2/0.2	20/20	10	25
	0.2S/0.5	20/20, 20/30	10	25
	0.2/10P10	20/20, 30/20	10	25
	0.5/10P10	20/20, 30/20	10	25
	0.5/10P15	20/20, 30/20	10	25
40	0.2	15, 20, 30	10	25
	0.5	15, 20, 30	20	50
	0.2S	15, 20, 30	10	25
	0.2/0.2	20/20	10	25
	0.2S/0.5	20/20	10	25
	0.2/10P10, 0.5/10P10	20/20, 30/20	10	25
	0.5/10P15, 0.5/10P20	20/20, 30/20	10	25
50, 60	0.2	15, 20, 30	20	50
	0.5	15, 20, 30	25	63
	0.2S	15, 20, 30	20	50
	0.2/0.2, 0.2S/0.2	15/15, 20/20, 20/30	20	50
	0.2/0.5, 0.2S/0.5	15/15, 20/20, 20/30	20	50
	0.2/10P10, 0.5/10P10	20/20, 30/20	20	50
	0.2/10P15, 0.5/10P15	20/20, 30/20	10	25
	0.2/10P20, 0.5/10P20	20/20, 30/20	10	25
	0.2/0.5/10P10	15/15/15, 30/30/30	10	25
75	0.2	15, 20, 30	31.5	80
	0.5	15, 20, 30	31.5	80
	0.2S	15, 20, 30	31.5	80
	0.2/0.2, 0.2S/0.2	15/15, 20/20, 20/30	31.5	80
	0.2/0.5, 0.2S/0.5	15/15, 20/20, 20/30	31.5	80
	0.2/10P10, 0.5/10P10	20/20, 30/20	31.5	80
	0.2/10P15, 0.5/10P15	20/20, 30/20	25	63
	0.2/10P20, 0.5/10P20	20/20, 30/20	15	38
	0.2/0.5/10P10	15/15/15, 30/30/30	15	38
100	0.2	15, 20, 30	40	100
	0.5	15, 20, 30	40	100
	0.2S	15, 20, 30	40	100
	0.2/0.2, 0.2S/0.2	15/15, 20/20, 20/30	40	100
	0.2/0.5, 0.2S/0.5	15/15, 20/20, 20/30	40	100
	0.2/10P10, 0.5/10P10	20/20, 30/20	40	100
	0.2/10P15, 0.5/10P15	20/20, 30/20	20	50

额定一次电流 Rated primary current (A)	准确级组合 Accuracy classes combination	额定输出 Rated output (VA)	额定短时热电流 Rated short-time thermal current (kA/1s)	额定动稳定电流 Rated dynamic current (kA)
100	0.2/10P20, 0.5/10P20	20/20, 30/20	20	50
	0.2/0.5/10P10	15/15/15, 30/30/30	20	50
	0.5/10P10/10P20	15/15/15, 15/15/20	20	50
125	0.2, 0.2S, 0.5	15, 20	40	100
	0.2/10P10, 0.5/10P10	20/20, 30/20	40	100
	0.2/10P20, 0.5/10P20	20/20, 30/20	20	50
150	0.2	15, 20, 30	50	125
	0.5	15, 20, 30	50	125
	0.2S	15, 20, 30	50	125
	0.2/0.2, 0.2S/0.2	15/15, 20/20, 20/30	50	125
	0.2/0.5, 0.2S/0.5	15/15, 20/20, 20/30	50	125
	0.2/10P10, 0.5/10P10	20/20, 30/20	50	125
	0.2/10P15, 0.5/10P15	20/20, 30/20	50	125
	0.2/10P20, 0.5/10P20	20/20, 30/20	25	63
	0.2/0.5/10P10	15/15/15, 30/30/30	25	63
	0.5/10P10/10P20	15/15/15, 15/15/20	25	63
200，250	0.2	15, 20, 30	50	125
	0.5	15, 20, 30	50	125
	0.2S	15, 20, 30	50	125
	0.2/0.2, 0.2S/0.2	15/15, 20/20, 20/30	50	125
	0.2/0.5, 0.2S/0.5	15/15, 20/20, 20/30	50	125
	0.2/10P10, 0.5/10P10	20/20, 30/20	50	125
	0.2/10P15, 0.5/10P15	20/20, 30/20	31.5	80
	0.2/10P20, 0.5/10P20	20/20, 30/20	31.5	80
	0.2/0.5/10P10	15/15/15, 30/30/30	31.5	80
	0.5/10P10/10P20	15/15/15, 15/15/20	31.5	80
300, 400	0.2	15, 20, 30	63	160
	0.5	15, 20, 30	63	160
	0.2S	15, 20, 30	63	160
	0.2/0.2, 0.2S/0.2	15/15, 20/20, 20/30	63	160
	0.2/0.5, 0.2S/0.5	15/15, 20/20, 20/30	63	160
	0.2/10P10, 0.5/10P10	20/20, 30/20	63	160
	0.2/10P15, 0.5/10P15	20/20, 30/20	40	100
	0.2/10P20, 0.5/10P20	20/20, 30/20	40	100
	0.2/0.5/10P10	15/15/15, 30/30/30	40	100
	0.5/10P10/10P20	15/15/15, 15/15/20	40	100
500, 600, 630	0.2	15, 20, 30	63	160
	0.5	15, 20, 30	63	160
	0.2S	15, 20, 30	63	160
	0.2/0.2, 0.2S/0.2	15/15, 20/20, 20/30	63	160
	0.2/0.5, 0.2S/0.5	15/15, 20/20, 20/30	63	160
	0.2/10P10, 0.5/10P10	20/20, 30/20	63	160
	0.2/10P15, 0.5/10P15	20/20, 30/20	63	160
	0.2/10P20, 0.5/10P20	20/20, 30/20	63	160
	0.2/0.5/10P10	15/15/15, 30/30/30	63	160
	0.2/0.5/10P20	15/15/15, 30/30/30	63	160
	0.2/10P10/10P20	15/15/15, 30/30/30	63	160
	0.2/0.5/10P20/10P20	15/15/15/15	63	160
750，800	0.2	15，20，30，40	80	200
	0.5	15，20，30，40	80	200
	0.2S	15，20，30，50	80	200
	0.2/0.2, 0.2S/0.2	15/15，20/20，30/30，40/40	80	200
	0.2/0.5, 0.2S/0.5	15/15，20/20，30/30，40/40	80	200

额定一次电流 Rated primary current (A)	准确级组合 Accuracy classes combination	额定输出 Rated output (VA)	额定短时热电流 Rated short-time thermal current (kA/1s)	额定动稳定电流 Rated dynamic current (kA)
750，800	0.2/10P10, 0.5/10P10	15/15，40/40	80	200
	0.2/10P15, 0.5/10P15	15/15，40/40	80	200
	0.2/10P20, 0.5/10P20	15/15，40/40	80	200
	0.2/0.5/10P10	15/15/15，40/40/40	80	200
	0.2/0.5/10P20	15/15/15，40/40/40	80	200
	0.2/10P10/10P20	15/15/15，40/40/40	80	200
	0.2/0.5/10P20/10P20	20/20/20/20	80	200
1000-1250	0.2	15，20，30，40	100	250
	0.5	15，20，30，40	100	250
	0.2S	15，20，30，50	100	250
	0.2/0.2, 0.2S/0.2	15/15，20/20，30/30，40/40	100	250
	0.2/0.5, 0.2S/0.5	15/15，20/20，30/30，40/40	100	250
	0.2/10P10, 0.5/10P10	15/15，40/40	100	250
	0.2/10P15, 0.5/10P15	15/15，40/40	100	250
	0.2/10P20, 0.5/10P20	15/15，40/40	100	250
	0.2/0.5/10P10	15/15/15，40/40/40	100	250
	0.2/0.5/10P20	15/15/15，40/40/40	100	250
	0.2/10P10/10P20	15/15/15，40/40/40	100	250
	0.2/0.5/10P20/10P20	20/20/30/30	100	250
1500-3150	0.2	15，20，30，40	100	250
	0.5	15，20，30，40	100	250
	0.2S	15，20，30，50	100	250
	0.2/0.2, 0.2S/0.2	15/15，20/20，30/30，40/40	100	250
	0.2/0.5, 0.2S/0.5	15/15，20/20，30/30，40/40	100	250
	0.2/10P10, 0.5/10P10	15/15，40/40	100	250
	0.2/10P15, 0.5/10P15	15/15，40/40	100	250
	0.2/10P20, 0.5/10P20	15/15，40/40	100	250
	0.2/0.5/10P10	15/15/15，40/40/40	100	250
	0.2/0.5/10P20	15/15/15，40/40/40	100	250
	0.2/10P10/10P20	15/15/15，40/40/40	100	250
	0.2/0.5/10P20/10P20	20/20/30/30	100	250

外形尺寸图
Overall dimensions

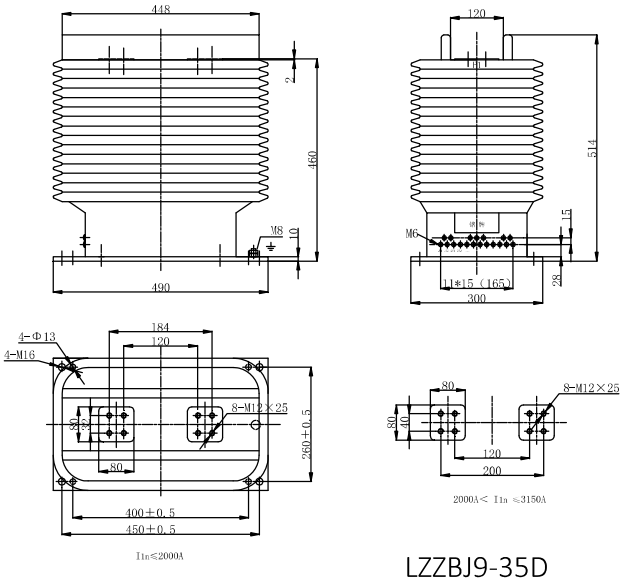

LZZBJ9-35D

净重(Weight)：133kg

LZZBJ9-36/250f/2-2 电流互感器

型号 Type	额定一次电流 Rated primary current (A)	准确级组合 Accuracy classes combination	额定输出 Rated output (VA)	额定短时热电流 Rated short-time thermal current (kA/1s)	额定动稳定电流 Rated dynamic current (kA)
LZZBJ9-36/250f/2-2	10	0.2, 0.5, 0.2S	10, 15	6	15
		0.2S/0.5, 0.5/10P10	10/15, 15/15	6	15
	20	0.2	10, 15, 20	10	25
		0.5	10, 15, 20	10	25
		0.2S	10, 15, 20	10	25
		0.2/10P10	15/15	10	25
	25	0.2	10, 15	10	25
		0.5	10, 15	10	25
		0.2S	10, 15	10	25
		0.2/0.5	10/15	10	25
		0.2/5P10, 0.5/5P10	10/15, 15/15	10	25
	30	0.2	10, 15, 20	10	25
		0.5	10, 15, 20	10	25
		0.2S	10, 15, 20	10	25
		0.2/0.2	10/10, 15/15	10	25
		0.2S/0.5	10/10, 15/15	10	25
		0.2/10P10	10/10, 10/15, 15/15	10	25
		0.5/10P10	10/10, 10/15, 15/15	10	25
		0.5/10P15	10/10, 15/15	10	25
	40	0.2	10, 15, 20, 30	10	25
		0.5	10, 15, 20, 30	20	50
		0.2S	10, 15, 20, 30	10	25
		0.2/0.2	10/10, 15/15, 20/20	10	25
		0.2S/0.5	10/10, 15/15, 20/20	10	25
		0.2/10P10, 0.5/10P10	10/15, 15/15, 20/20	10	25
		0.5/10P15, 0.5/10P20	10/10, 15/15	10	25
	50, 60	0.2	10, 15, 20, 30	20	50
		0.5	10, 15, 20, 30	25	63
		0.2S	10, 15, 20, 30	20	50
		0.2/0.2, 0.2S/0.2	10/10, 15/15, 20/20	20	50
		0.2/0.5, 0.2S/0.5	10/15, 15/15, 20/20	20	50
		0.2/10P10, 0.5/10P10	10/15, 15/15, 20/20	20	50
		0.2/10P15, 0.5/10P15	10/10, 15/15, 20/20	10	25
		0.2/10P20, 0.5/10P20	10/10, 15/15, 20/20	10	25
		0.2/0.5/10P10	15/15/15, 30/30/30	10	25
	75	0.2	10, 15, 20, 30	31.5	80
		0.5	10, 15, 20, 30	31.5	80
		0.2S	10, 15, 20, 30	31.5	80
		0.2/0.2, 0.2S/0.2	10/10, 15/15, 20/20	31.5	80
		0.2/0.5, 0.2S/0.5	10/15, 15/15, 20/20	31.5	80
		0.2/10P10, 0.5/10P10	10/15, 15/15, 20/20	31.5	80
		0.2/10P15, 0.5/10P15	10/10, 15/15, 20/20	25	63
		0.2/10P20, 0.5/10P20	10/10, 15/15, 20/20	15	38
		0.2/0.5/10P10	15/15/15, 30/30/30	15	38
	100	0.2	10, 15, 20, 30	40	100
		0.5	10, 15, 20, 30	40	100
		0.2S	10, 15, 20, 30	40	100
		0.2/0.2, 0.2S/0.2	10/10, 15/15, 20/20	40	100
		0.2/0.5, 0.2S/0.5	10/15, 15/15, 20/20	40	100

型号 Type	额定一次电流 Rated primary current (A)	准确级组合 Accuracy classes combination	额定输出 Rated output (VA)	额定短时热电流 Rated short-time thermal current (kA/1s)	额定动稳定电流 Rated dynamic current (kA)
LZZBJ9-36/250f/2-2	100	0.2/10P10, 0.5/10P10	10/15, 15/15, 20/20	40	100
		0.2/10P15, 0.5/10P15	10/10, 15/15, 20/20	40	100
		0.2/10P20, 0.5/10P20	10/10, 15/15, 20/20	20	50
		0.2/0.5/10P10	15/15/15, 30/30/30	20	50
		0.5/10P10/10P20	15/15/15, 15/15/20	20	50
	125	0.2, 0.2S, 0.5	10, 15	40	100
		0.2/10P10, 0.5/10P10	15/15	40	100
		0.2/10P20, 0.5/10P20	15/15	20	50
	150	0.2	10, 15, 20, 30	40	100
		0.5	10, 15, 20, 30	40	100
		0.2S	10, 15, 20, 30	40	100
		0.2/0.2, 0.2S/0.2	10/10, 15/15, 20/20	40	100
		0.2/0.5, 0.2S/0.5	10/15, 15/15, 20/20	40	100
		0.2/10P10, 0.5/10P10	10/15, 15/15, 20/20	40	100
		0.2/10P15, 0.5/10P15	10/10, 15/15, 20/20	40	100
		0.2/10P20, 0.5/10P20	10/10, 15/15, 20/20	25	63
		0.2/0.5/10P10	15/15/15, 30/30/30	25	63
		0.5/10P10/10P20	15/15/15, 15/15/20	25	63
	200，250	0.2	10, 15, 20, 30	40	100
		0.5	10, 15, 20, 30	40	100
		0.2S	10, 15, 20, 30	40	100
		0.2/0.2, 0.2S/0.2	10/10, 15/15, 20/20	40	100
		0.2/0.5, 0.2S/0.5	10/15, 15/15, 20/20	40	100
		0.2/10P10, 0.5/10P10	10/15, 15/15, 20/20	40	100
		0.2/10P15, 0.5/10P15	10/10, 15/15, 20/20	31.5	80
		0.2/10P20, 0.5/10P20	10/10, 15/15, 20/20	31.5	80
		0.2/0.5/10P10	15/15/15, 30/30/30	31.5	80
		0.5/10P10/10P20	15/15/15, 15/15/20	31.5	80
	300, 400	0.2	10, 15, 20, 30	63	160
		0.5	10, 15, 20, 30	63	160
		0.2S	10, 15, 20, 30	63	160
		0.2/0.2, 0.2S/0.2	10/10, 15/15, 20/20	63	160
		0.2/0.5, 0.2S/0.5	10/15, 15/15, 20/20	63	160
		0.2/10P10, 0.5/10P10	10/15, 15/15, 20/20	63	160
		0.2/10P15, 0.5/10P15	10/10, 15/15, 20/20	40	100
		0.2/10P20, 0.5/10P20	10/10, 15/15, 20/20	40	100
		0.2/0.5/10P10	15/15/15, 30/30/30	40	100
		0.5/10P10/10P20	15/15/15, 15/15/30	40	100
	500, 600, 630	0.2	10, 15, 20, 30	63	160
		0.5	10, 15, 20, 30	63	160
		0.2S	10, 15, 20, 30	63	160
		0.2/0.2, 0.2S/0.2	10/10, 15/15, 20/20	63	160
		0.2/0.5, 0.2S/0.5	10/15, 15/15, 20/20	63	160
		0.2/10P10, 0.5/10P10	10/15, 15/15, 15/20, 30/30	63	160
		0.2/10P15, 0.5/10P15	10/10, 15/15, 30/30	63	160
		0.2/10P20, 0.5/10P20	10/10, 15/15, 30/30	63	160
		0.2/0.5/10P10	15/15/15, 30/30/30	63	160
		0.2/0.5/10P20	15/15/15, 30/30/30	63	160
		0.2/10P10/10P20	15/15/15, 30/30/30	63	160
		0.2/0.5/10P20/10P20	15/15/15/15	63	160

型号 Type	额定一次电流 Rated primary current (A)	准确级组合 Accuracy classes combination	额定输出 Rated output (VA)	额定短时热电流 Rated short-time thermal current (kA/1s)	额定动稳定电流 Rated dynamic current (kA)
LZZBJ9-36/250f/2-2	750, 800	0. 2	10, 15, 20, 30	80	200
		0. 5	10, 15, 20, 30	80	200
		0. 2S	10, 15, 20, 30	80	200
		0. 2/0. 2, 0. 2S/0. 2	10/10, 15/15, 20/20	80	200
		0. 2/0. 5, 0. 2S/0. 5	10/15, 15/15, 20/20	80	200
		0. 2/10P10, 0. 5/10P10	10/15, 15/15, 15/20, 30/30	80	200
		0. 2/10P15, 0. 5/10P15	10/10, 15/15, 30/30	80	200
		0. 2/10P20, 0. 5/10P20	10/10, 15/15, 30/30	80	200
		0. 2/0. 5/10P10	15/15/15, 30/30/30	80	200
		0. 2/0. 5/10P20	15/15/15, 30/30/30	80	200
		0. 2/10P10/10P20	15/15/15, 30/30/30	80	200
		0. 2/0. 5/10P20/10P20	15/15/20/20	80	200
	1000, 1200, 1250	0. 2	10, 15, 20, 30	100	250
		0. 5	10, 15, 20, 30	100	250
		0. 2S	10, 15, 20, 30	100	250
		0. 2/0. 2, 0. 2S/0. 2	10/10, 15/15, 20/20	100	250
		0. 2/0. 5, 0. 2S/0. 5	10/15, 15/15, 20/20	100	250
		0. 2/10P10, 0. 5/10P10	10/15, 15/15, 15/20, 30/30	100	250
		0. 2/10P15, 0. 5/10P15	10/10, 15/15, 30/30	100	250
		0. 2/10P20, 0. 5/10P20	10/10, 15/15, 30/30	100	250
		0. 2/0. 5/10P10	15/15/15, 30/30/30	100	250
		0. 2/0. 5/10P20	15/15/15, 30/30/30	100	250
		0. 2/10P10/10P20	15/15/15, 30/30/30	100	250
		0. 2/0. 5/10P20/10P20	15/15/30/30	100	250

外形尺寸图
Overall dimensions

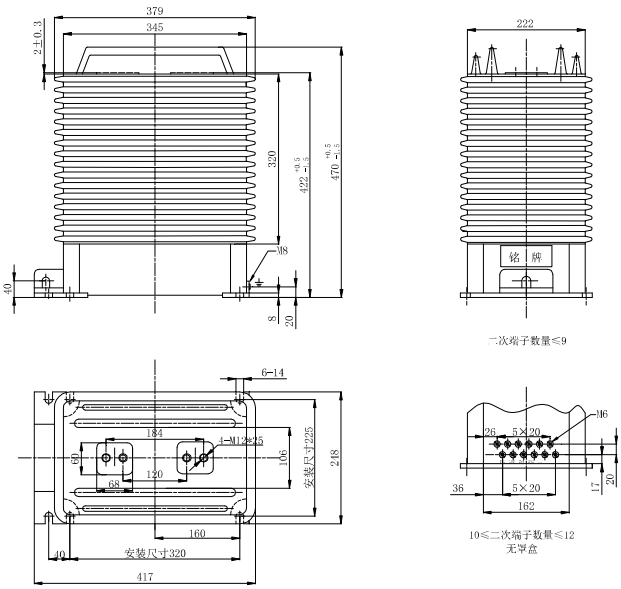

LZZBJ9-36/250f/2-2
净重(Weight)：74kg

LZZBJ9-36/250f/2 电流互感器

型号 Type	额定一次电流 Rated primary current (A)	准确级组合 Accuracy classes combination	额定输出 Rated output (VA)	额定短时热电流 Rated short-time thermal current (kA/1s)	额定动稳定电流 Rated dynamic current (kA)
LZZBJ9-36/250f/2	10	0. 2, 0. 5, 0. 2S	10, 15	6	15
		0. 2S/0. 5, 0. 5/10P10	10/15, 15/15	6	15
	20	0. 2	10, 15, 20	10	25
		0. 5	10, 15, 20	10	25
		0. 2S	10, 15, 20	10	25
		0. 2/10P10	15/15	10	25
	25	0. 2	10, 15	10	25
		0. 5	10, 15	10	25
		0. 2S	10, 15	10	25
		0. 2/0. 5	10/15	10	25
		0. 2/5P10, 0. 5/5P10	10/15, 15/15	10	25
	30	0. 2	10, 15, 20	10	25
		0. 5	10, 15, 20	10	25
		0. 2S	10, 15, 20	10	25
		0. 2/0. 2	10/10, 15/15	10	25
		0. 2S/0. 5	10/10, 15/15	10	25
		0. 2/10P10	10/10, 10/15, 15/15	10	25
		0. 5/10P10	10/10, 10/15, 15/15	10	25
		0. 5/10P15	10/10, 15/15	10	25
	40	0. 2	10, 15, 20, 30	10	25
		0. 5	10, 15, 20, 30	10	25
		0. 2S	10, 15, 20, 30	10	25
		0. 2/0. 2	10/10, 15/15, 20/20	10	25
		0. 2S/0. 5	10/10, 15/15, 20/20	10	25
		0. 2/10P10, 0. 5/10P10	10/15, 15/15, 20/20	10	25
		0. 5/10P15, 0. 5/10P20	10/10, 15/15	10	25
	50, 60	0. 2	10, 15, 20, 30	20	50
		0. 5	10, 15, 20, 30	25	63
		0. 2S	10, 15, 20, 30	20	50
		0. 2/0. 2, 0. 2S/0. 2	10/10, 15/15, 20/20	20	50
		0. 2/0. 5, 0. 2S/0. 5	10/15, 15/15, 20/20	20	50
		0. 2/10P10, 0. 5/10P10	10/15, 15/15, 20/20	20	50
		0. 2/10P15, 0. 5/10P15	10/10, 15/15, 20/20	10	25
		0. 2/10P20, 0. 5/10P20	10/10, 15/15, 20/20	10	25
		0. 2/0. 5/10P10	15/15/15, 30/30/30	10	25
	75	0. 2	10, 15, 20, 30	31. 5	80
		0. 5	10, 15, 20, 30	31. 5	80
		0. 2S	10, 15, 20, 30	31. 5	80
		0. 2/0. 2, 0. 2S/0. 2	10/10, 15/15, 20/20	31. 5	80
		0. 2/0. 5, 0. 2S/0. 5	10/15, 15/15, 20/20	31. 5	80
		0. 2/10P10, 0. 5/10P10	10/15, 15/15, 20/20	31. 5	80
		0. 2/10P15, 0. 5/10P15	10/10, 15/15, 20/20	25	63
		0. 2/10P20, 0. 5/10P20	10/10, 15/15, 20/20	15	38
		0. 2/0. 5/10P10	15/15/15, 30/30/30	15	38
	100	0. 2	10, 15, 20, 30	40	100
		0. 5	10, 15, 20, 30	40	100
		0. 2S	10, 15, 20, 30	40	100
		0. 2/0. 2, 0. 2S/0. 2	10/10, 15/15, 20/20	40	100
		0. 2/0. 5, 0. 2S/0. 5	10/15, 15/15, 20/20	40	100
		0. 2/10P10, 0. 5/10P10	10/15, 15/15, 20/20	40	100

型号 Type	额定一次电流 Rated primary current (A)	准确级组合 Accuracy classes combination	额定输出 Rated output (VA)	额定短时热电流 Rated short-time thermal current (kA/1s)	额定动稳定电流 Rated dynamic current (kA)
LZZBJ9-36/250f/2	100	0.2/10P15, 0.5/10P15	10/10, 15/15, 20/20	20	50
		0.2/10P20, 0.5/10P20	10/10, 15/15, 20/20	20	50
		0.2/0.5/10P10	15/15/15, 30/30/30	20	50
		0.5/10P10/10P20	15/15/15, 15/15/20	20	50
	125	0.2, 0.2S, 0.5	10, 15	40	100
		0.2/10P10, 0.5/10P10	15/15	40	100
		0.2/10P20, 0.5/10P20	15/15	20	50
	150	0.2	10, 15, 20, 30	50	125
		0.5	10, 15, 20, 30	50	125
		0.2S	10, 15, 20, 30	50	125
		0.2/0.2, 0.2S/0.2	10/10, 15/15, 20/20	50	125
		0.2/0.5, 0.2S/0.5	10/15, 15/15, 20/20	50	125
		0.2/10P10, 0.5/10P10	10/15, 15/15, 20/20	50	125
		0.2/10P15, 0.5/10P15	10/10, 15/15, 20/20	50	125
		0.2/10P20, 0.5/10P20	10/10, 15/15, 20/20	25	63
		0.2/0.5/10P10	15/15/15, 30/30/30	25	63
		0.5/10P10/10P20	15/15/15, 15/15/20	25	63
	200，250	0.2	10, 15, 20, 30	50	125
		0.5	10, 15, 20, 30	50	125
		0.2S	10, 15, 20, 30	50	125
		0.2/0.2, 0.2S/0.2	10/10, 15/15, 20/20	50	125
		0.2/0.5, 0.2S/0.5	10/15, 15/15, 20/20	50	125
		0.2/10P10, 0.5/10P10	10/15, 15/15, 20/20	50	125
		0.2/10P15, 0.5/10P15	10/10, 15/15, 20/20	31.5	80
		0.2/10P20, 0.5/10P20	10/10, 15/15, 20/20	31.5	80
		0.2/0.5/10P10	15/15/15, 30/30/30	31.5	80
		0.5/10P10/10P20	15/15/15, 15/15/20	31.5	80
	300, 400	0.2	10, 15, 20, 30	63	160
		0.5	10, 15, 20, 30	63	160
		0.2S	10, 15, 20, 30	63	160
		0.2/0.2, 0.2S/0.2	10/10, 15/15, 20/20	63	160
		0.2/0.5, 0.2S/0.5	10/15, 15/15, 20/20	63	160
		0.2/10P10, 0.5/10P10	10/15, 15/15, 20/20	63	160
		0.2/10P15, 0.5/10P15	10/10, 15/15, 20/20	40	100
		0.2/10P20, 0.5/10P20	10/10, 15/15, 20/20	40	100
		0.2/0.5/10P10	15/15/15, 30/30/30	40	100
		0.5/10P10/10P20	15/15/15, 15/15/30	40	100
	500, 600, 630	0.2	10, 15, 20, 30	63	160
		0.5	10, 15, 20, 30	63	160
		0.2S	10, 15, 20, 30	63	160
		0.2/0.2, 0.2S/0.2	10/10, 15/15, 20/20	63	160
		0.2/0.5, 0.2S/0.5	10/15, 15/15, 20/20	63	160
		0.2/10P10, 0.5/10P10	10/15, 15/15, 15/20, 30/30	63	160
		0.2/10P15, 0.5/10P15	10/10, 15/15, 30/30	63	160
		0.2/10P20, 0.5/10P20	10/10, 15/15, 30/30	63	160
		0.2/0.5/10P10	15/15/15, 30/30/30	63	160
		0.2/0.5/10P20	15/15/15, 30/30/30	63	160
		0.2/10P10/10P20	15/15/15, 30/30/30	63	160
		0.2/0.5/10P20/10P20	15/15/15/15	63	160
	750, 800	0.2	10, 15, 20, 30	80	200
		0.5	10, 15, 20, 30	80	200
		0.2S	10, 15, 20, 30	80	200

型号 Type	额定一次电流 Rated primary current (A)	准确级组合 Accuracy classes combination	额定输出 Rated output (VA)	额定短时热电流 Rated short-time thermal current (kA/1s)	额定动稳定电流 Rated dynamic current (kA)
LZZBJ9-36/250f/2	750, 800	0. 2/0. 2, 0. 2S/0. 2	10/10, 15/15, 20/20	80	200
		0. 2/0. 5, 0. 2S/0. 5	10/15, 15/15, 20/20	80	200
		0. 2/10P10, 0. 5/10P10	10/15, 15/15, 15/20, 30/30	80	200
		0. 2/10P15, 0. 5/10P15	10/10, 15/15, 30/30	80	200
		0. 2/10P20, 0. 5/10P20	10/10, 15/15, 30/30	80	200
		0. 2/0. 5/10P10	15/15/15, 30/30/30	80	200
		0. 2/0. 5/10P20	15/15/15, 30/30/30	80	200
		0. 2/10P10/10P20	15/15/15, 30/30/30	80	200
		0. 2/0. 5/10P20/10P20	15/15/20/20	80	200
	1000, 1200, 1250	0. 2	10, 15, 20, 30	100	250
		0. 5	10, 15, 20, 30	100	250
		0. 2S	10, 15, 20, 30	100	250
		0. 2/0. 2, 0. 2S/0. 2	10/10, 15/15, 20/20	100	250
		0. 2/0. 5, 0. 2S/0. 5	10/15, 15/15, 20/20	100	250
		0. 2/10P10, 0. 5/10P10	10/15, 15/15, 15/20, 30/30	100	250
		0. 2/10P15, 0. 5/10P15	10/10, 15/15, 30/30	100	250
		0. 2/10P20, 0. 5/10P20	10/10, 15/15, 30/30	100	250
		0. 2/0. 5/10P10	15/15/15, 30/30/30	100	250
		0. 2/0. 5/10P20	15/15/15, 30/30/30	100	250
		0. 2/10P10/10P20	15/15/15, 30/30/30	100	250
		0. 2/0. 5/10P20/10P20	15/15/30/30	100	250
	1500-2500	0. 2	10, 15, 20, 30	100	250
		0. 5	10, 15, 20, 30	100	250
		0. 2S	10, 15, 20, 30	100	250
		0. 2/0. 2, 0. 2S/0. 2	10/10, 15/15, 20/20	100	250
		0. 2/0. 5, 0. 2S/0. 5	10/15, 15/15, 20/20	100	250
		0. 2/10P10, 0. 5/10P10	10/15, 15/15, 15/20, 30/30	100	250
		0. 2/10P15, 0. 5/10P15	10/10, 15/15, 30/30	100	250
		0. 2/10P20, 0. 5/10P20	10/10, 15/15, 30/30	100	250
		0. 2/0. 5/10P10	15/15/15, 30/30/30	100	250
		0. 2/0. 5/10P20	15/15/15, 30/30/30	100	250
		0. 2/10P10/10P20	15/15/15, 30/30/30	100	250
		0. 2/0. 5/10P20/10P20	15/15/30/30	100	250

外形尺寸图
Overall dimensions

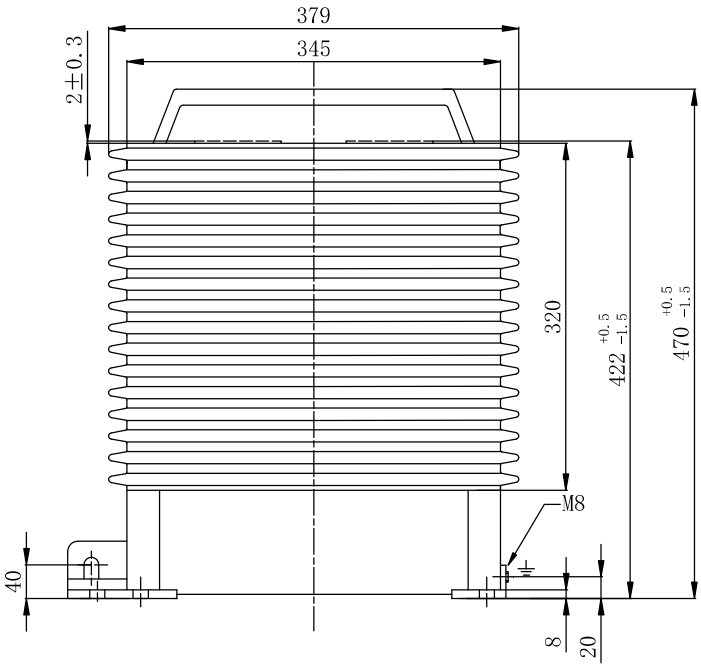

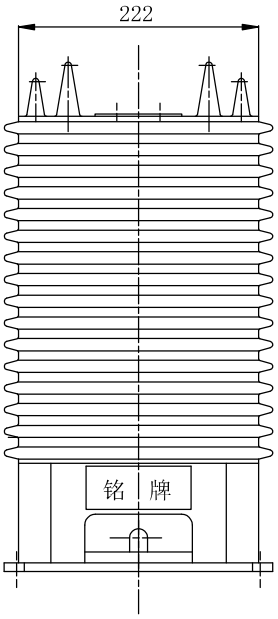

二次端子数量≤9

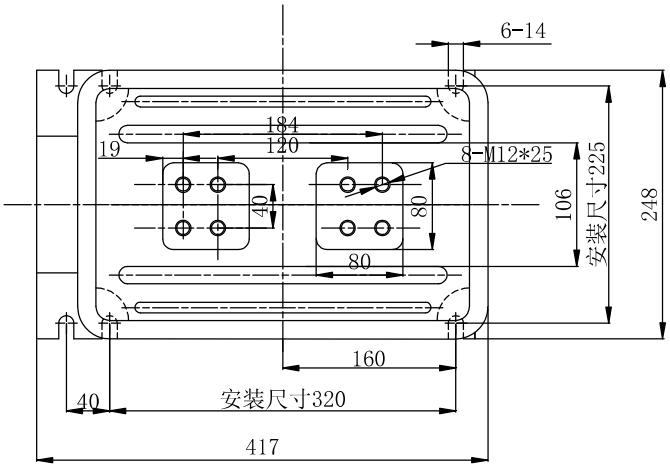

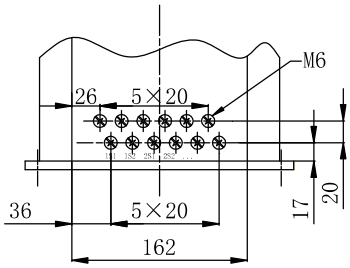

10≤二次端子数量≤12
无罩盒

LZZBJ9-36/250f/2
净重（Weight）：74kg

LZZBJ9-36/250f/2-C 电流互感器

额定一次电流 Rated primary current (A)	额定短时热电流 Rated short-time thermal current (kA/1s)	额定动稳定电流 Rated dynamic current (kA)	准确级组合 Accuracy classes combination	额定输出 Rated output (VA)			
				0.2S,0.5S	0.2	0.5	5P
3000-4000	100	250	0.2S/0.5 0.5/5P10 0.2S/5P20 0.5S/5P20 0.2/5P20 0.5/5P20 0.2/0.5/5P10 0.2S/5P10/5P20 0.5S/5P10/5P20 0.2/5P10/5P20 0.5/5P20/5P20 0.5/5P10/5P20 0.2/0.5/5P10/5P20	10	15	15	20

外形尺寸图
Overall dimensions

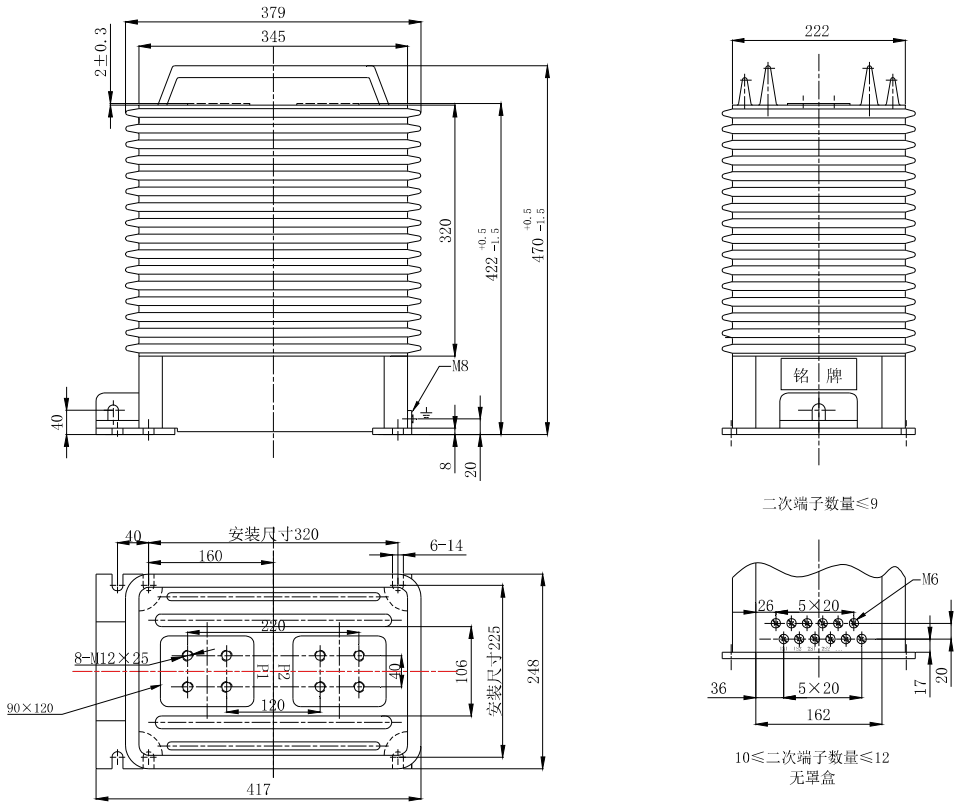

LZZBJ9-36/250f/2-C　　净重（Weight）：85kg

LZZBJ9-36/250f/2g-2 电流互感器

型号 Type	额定一次电流 Rated primary current (A)	准确级组合 Accuracy classes combination	额定输出 Rated output (VA)	额定短时热电流 Rated short-time thermal current (kA/1s)	额定动稳定电流 Rated dynamic current (kA)
LZZBJ9-36/250f/2g-2	10	0.2, 0.5, 0.2S	10, 15	3	8
		0.2S/0.5, 0.5/10P10	10/15, 15/15	3	8
	20	0.2	10, 15, 20	3	8
		0.5	10, 15, 20	3	8
		0.2S	10, 15, 20	3	8
		0.2/10P10	15/15	3	8
	25	0.2	10, 15	3	8
		0.5	10, 15	3	8
		0.2S	10, 15	3	8
		0.2/0.5	10/15	3	8
		0.2/5P10, 0.5/5P10	10/15, 15/15	3	8
	30	0.2	10, 15, 20	3	8
		0.5	10, 15, 20	3	8
		0.2S	10, 15, 20	3	8
		0.2/0.2	10/10, 15/15	3	8
		0.2S/0.5	10/10, 15/15	3	8
		0.2/10P10	10/10, 10/15, 15/15	3	8
		0.5/10P10	10/10, 10/15, 15/15	3	8
		0.5/10P15	10/10, 15/15	3	8
	40	0.2	10, 15, 20, 30	5	13
		0.5	10, 15, 20, 30	5	13
		0.2S	10, 15, 20, 30	5	13
		0.2/0.2	10/10, 15/15, 20/20	5	13
		0.2S/0.5	10/10, 15/15, 20/20	5	13
		0.2/10P10, 0.5/10P10	10/15, 15/15, 20/20	5	13
		0.5/10P15, 0.5/10P20	10/10, 15/15	5	13
	50, 60	0.2	10, 15, 20, 30	6	15
		0.5	10, 15, 20, 30	6	15
		0.2S	10, 15, 20, 30	6	15
		0.2/0.2, 0.2S/0.2	10/10, 15/15, 20/20	6	15
		0.2/0.5, 0.2S/0.5	10/15, 15/15, 20/20	6	15
		0.2/10P10, 0.5/10P10	10/15, 15/15, 20/20	6	15
		0.2/10P15, 0.5/10P15	10/10, 15/15, 20/20	6	15
		0.2/0.5/10P10	15/15/15, 30/30/30	6	15
	75	0.2	10, 15, 20, 30	7	18
		0.5	10, 15, 20, 30	7	18
		0.2S	10, 15, 20, 30	7	18
		0.2/0.2, 0.2S/0.2	10/10, 15/15, 20/20	7	18
		0.2/0.5, 0.2S/0.5	10/15, 15/15, 20/20	7	18
		0.2/10P10, 0.5/10P10	10/15, 15/15, 20/20	7	18
		0.2/10P15, 0.5/10P15	10/10, 15/15, 20/20	7	18
		0.2/0.5/10P10	15/15/15, 30/30/30	7	18
	100	0.2	10, 15, 20, 30	10	25
		0.5	10, 15, 20, 30	10	25
		0.2S	10, 15, 20, 30	10	25
		0.2/0.2, 0.2S/0.2	10/10, 15/15, 20/20	10	25
		0.2/0.5, 0.2S/0.5	10/15, 15/15, 20/20	10	25
		0.2/10P10, 0.5/10P10	10/15, 15/15, 20/20	10	25
		0.2/10P15, 0.5/10P15	10/10, 15/15, 20/20	10	25

型号 Type	额定一次电流 Rated primary current (A)	准确级组合 Accuracy classes combination	额定输出 Rated output (VA)	额定短时热电流 Rated short-time thermal current (kA/1s)	额定动稳定电流 Rated dynamic current (kA)
LZZBJ9-36/250f/2g-2	100	0.2/0.5/10P10	15/15/15, 30/30/30	20	50
		0.5/10P10/10P20	15/15/15, 15/15/20	20	50
	125	0.2, 0.2S, 0.5	10, 15	12	30
		0.2/10P10, 0.5/10P10	15/15	12	30
		0.2/10P20, 0.5/10P20	15/15	12	30
	150	0.2	10, 15, 20, 30	15	38
		0.5	10, 15, 20, 30	15	38
		0.2S	10, 15, 20, 30	15	38
		0.2/0.2, 0.2S/0.2	10/10, 15/15, 20/20	15	38
		0.2/0.5, 0.2S/0.5	10/15, 15/15, 20/20	15	38
		0.2/10P10, 0.5/10P10	10/15, 15/15, 20/20	15	38
		0.2/10P15, 0.5/10P15	10/10, 15/15, 20/20	15	38
		0.2/0.5/10P10	15/15/15, 30/30/30	15	38
		0.5/10P10/10P20	15/15/15, 15/15/20	15	38
	200，250	0.2	10, 15, 20, 30	25	63
		0.5	10, 15, 20, 30	25	63
		0.2S	10, 15, 20, 30	25	63
		0.2/0.2, 0.2S/0.2	10/10, 15/15, 20/20	25	63
		0.2/0.5, 0.2S/0.5	10/15, 15/15, 20/20	25	63
		0.2/10P10, 0.5/10P10	10/15, 15/15, 20/20	25	63
		0.2/10P15, 0.5/10P15	10/10, 15/15, 20/20	25	63
		0.2/0.5/10P10	15/15/15, 30/30/30	25	63
		0.5/10P10/10P20	15/15/15, 15/15/20	25	63
	300, 400	0.2	10, 15, 20, 30	31.5	80
		0.5	10, 15, 20, 30	31.5	80
		0.2S	10, 15, 20, 30	31.5	80
		0.2/0.2, 0.2S/0.2	10/10, 15/15, 20/20	31.5	80
		0.2/0.5, 0.2S/0.5	10/15, 15/15, 20/20	31.5	80
		0.2/10P10, 0.5/10P10	10/15, 15/15, 20/20	31.5	80
		0.2/10P15, 0.5/10P15	10/10, 15/15, 20/20	31.5	80
		0.2/0.5/10P10	15/15/15, 30/30/30	31.5	80
		0.5/10P10/10P20	15/15/15, 15/15/30	31.5	80
	500, 600, 630	0.2	10, 15, 20, 30	63	160
		0.5	10, 15, 20, 30	63	160
		0.2S	10, 15, 20, 30	63	160
		0.2/0.2, 0.2S/0.2	10/10, 15/15, 20/20	63	160
		0.2/0.5, 0.2S/0.5	10/15, 15/15, 20/20	63	160
		0.2/10P10, 0.5/10P10	10/15, 15/15, 15/20, 30/30	63	160
		0.2/10P15, 0.5/10P15	10/10, 15/15, 30/30	63	160
		0.2/0.5/10P10	15/15/15, 30/30/30	63	160
		0.2/0.5/10P20	15/15/15, 30/30/30	63	160
		0.2/10P10/10P20	15/15/15, 30/30/30	63	160
		0.2/0.5/10P20/10P20	15/15/15/15	63	160
	750, 800	0.2	10, 15, 20, 30	80	200
		0.5	10, 15, 20, 30	80	200
		0.2S	10, 15, 20, 30	80	200

型号 Type	额定一次电流 Rated primary current (A)	准确级组合 Accuracy classes combination	额定输出 Rated output (VA)	额定短时热电流 Rated short-time thermal current (kA/1s)	额定动稳定电流 Rated dynamic current (kA)
LZZBJ9-36/250f/2g-2	750, 800	0.2/0.2, 0.2S/0.2	10/10, 15/15, 20/20	80	200
		0.2/0.5, 0.2S/0.5	10/15, 15/15, 20/20	80	200
		0.2/10P10, 0.5/10P10	10/15, 15/15, 15/20, 30/30	80	200
		0.2/10P15, 0.5/10P15	10/10, 15/15, 30/30	80	200
		0.2/0.5/10P10	15/15/15, 30/30/30	80	200
		0.2/0.5/10P20	15/15/15, 30/30/30	80	200
		0.2/10P10/10P20	15/15/15, 30/30/30	80	200
		0.2/0.5/10P20/10P20	15/15/20/20	80	200
	1000, 1200, 1250	0.2	10, 15, 20, 30	100	250
		0.5	10, 15, 20, 30	100	250
		0.2S	10, 15, 20, 30	100	250
		0.2/0.2, 0.2S/0.2	10/10, 15/15, 20/20	100	250
		0.2/0.5, 0.2S/0.5	10/15, 15/15, 20/20	100	250
		0.2/10P10, 0.5/10P10	10/15, 15/15, 15/20, 30/30	100	250
		0.2/10P15, 0.5/10P15	10/10, 15/15, 30/30	100	250
		0.2/0.5/10P10	15/15/15, 30/30/30	100	250
		0.2/0.5/10P20	15/15/15, 30/30/30	100	250
		0.2/10P10/10P20	15/15/15, 30/30/30	100	250
		0.2/0.5/10P20/10P20	15/15/30/30	100	250

外形尺寸图
Overall dimensions

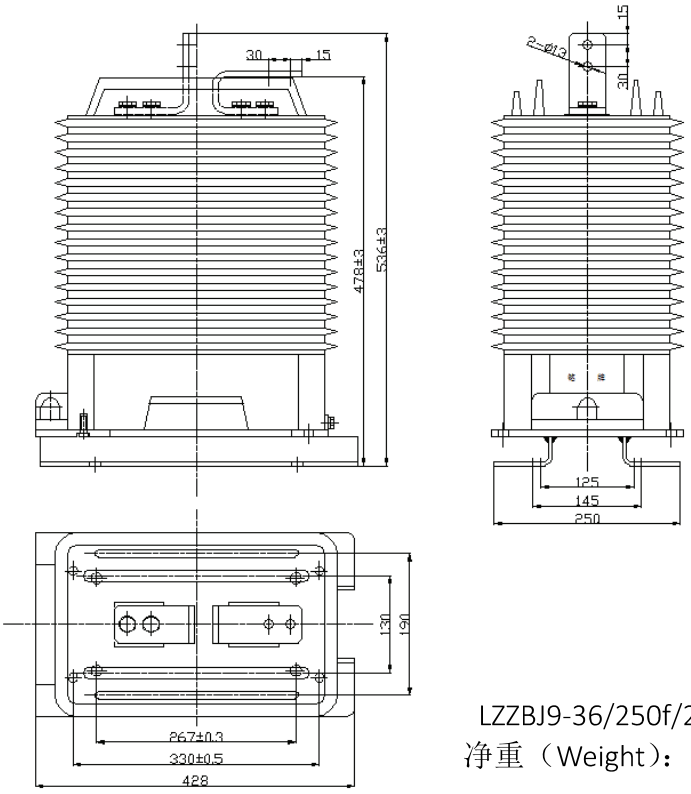

LZZBJ9-36/250f/2g-2
净重（Weight）：76.5kg

LZZBJ9-36/250f/2g 电流互感器

型号 Type	额定一次电流 Rated primary current (A)	准确级组合 Accuracy classes combination	额定输出 Rated output (VA)	额定短时热电流 Rated short-time thermal current (kA/1s)	额定动稳定电流 Rated dynamic current (kA)
LZZBJ9-36/250f/2g	10	0.2, 0.5, 0.2S	10, 15	3	8
		0.2S/0.5, 0.5/10P10	10/15, 15/15	3	8
	20	0.2	10, 15, 20	3	8
		0.5	10, 15, 20	3	8
		0.2S	10, 15, 20	3	8
		0.2/10P10	15/15	3	8
	25	0.2	10, 15	3	8
		0.5	10, 15	3	8
		0.2S	10, 15	3	8
		0.2/0.5	10/15	3	8
		0.2/5P10, 0.5/5P10	10/15, 15/15	3	8
	30	0.2	10, 15, 20	3	8
		0.5	10, 15, 20	3	8
		0.2S	10, 15, 20	3	8
		0.2/0.2	10/10, 15/15	3	8
		0.2S/0.5	10/10, 15/15	3	8
		0.2/10P10	10/10, 10/15, 15/15	3	8
		0.5/10P10	10/10, 10/15, 15/15	3	8
		0.5/10P15	10/10, 15/15	3	8
	40	0.2	10, 15, 20, 30	5	13
		0.5	10, 15, 20, 30	5	13
		0.2S	10, 15, 20, 30	5	13
		0.2/0.2	10/10, 15/15, 20/20	5	13
		0.2S/0.5	10/10, 15/15, 20/20	5	13
		0.2/10P10, 0.5/10P10	10/15, 15/15, 20/20	5	13
		0.5/10P15, 0.5/10P20	10/10, 15/15	5	13
	50, 60	0.2	10, 15, 20, 30	6	15
		0.5	10, 15, 20, 30	6	15
		0.2S	10, 15, 20, 30	6	15
		0.2/0.2, 0.2S/0.2	10/10, 15/15, 20/20	6	15
		0.2/0.5, 0.2S/0.5	10/15, 15/15, 20/20	6	15
		0.2/10P10, 0.5/10P10	10/15, 15/15, 20/20	6	15
		0.2/10P15, 0.5/10P15	10/10, 15/15, 20/20	6	15
		0.2/0.5/10P10	15/15/15, 30/30/30	6	15
	75	0.2	10, 15, 20, 30	7	18
		0.5	10, 15, 20, 30	7	18
		0.2S	10, 15, 20, 30	7	18
		0.2/0.2, 0.2S/0.2	10/10, 15/15, 20/20	7	18
		0.2/0.5, 0.2S/0.5	10/15, 15/15, 20/20	7	18
		0.2/10P10, 0.5/10P10	10/15, 15/15, 20/20	7	18
		0.2/10P15, 0.5/10P15	10/10, 15/15, 20/20	7	18
		0.2/0.5/10P10	15/15/15, 30/30/30	7	18
	100	0.2	10, 15, 20, 30	10	25
		0.5	10, 15, 20, 30	10	25
		0.2S	10, 15, 20, 30	10	25
		0.2/0.2, 0.2S/0.2	10/10, 15/15, 20/20	10	25
		0.2/0.5, 0.2S/0.5	10/15, 15/15, 20/20	10	25
		0.2/10P10, 0.5/10P10	10/15, 15/15, 20/20	10	25
		0.2/10P15, 0.5/10P15	10/10, 15/15, 20/20	10	25

型号 Type	额定一次电流 Rated primary current (A)	准确级组合 Accuracy classes combination	额定输出 Rated output (VA)	额定短时热电流 Rated short-time thermal current (kA/1s)	额定动稳定电流 Rated dynamic current (kA)
LZZBJ9-36/250f/2g	100	0.2/0.5/10P10	15/15/15, 30/30/30	20	50
		0.5/10P10/10P20	15/15/15, 15/15/20	20	50
	125	0.2, 0.2S, 0.5	10, 15	12	30
		0.2/10P10, 0.5/10P10	15/15	12	30
		0.2/10P20, 0.5/10P20	15/15	12	30
	150	0.2	10, 15, 20, 30	15	38
		0.5	10, 15, 20, 30	15	38
		0.2S	10, 15, 20, 30	15	38
		0.2/0.2, 0.2S/0.2	10/10, 15/15, 20/20	15	38
		0.2/0.5, 0.2S/0.5	10/15, 15/15, 20/20	15	38
		0.2/10P10, 0.5/10P10	10/15, 15/15, 20/20	15	38
		0.2/10P15, 0.5/10P15	10/10, 15/15, 20/20	15	38
		0.2/0.5/10P10	15/15/15, 30/30/30	15	38
		0.5/10P10/10P20	15/15/15, 15/15/20	15	38
	200，250	0.2	10, 15, 20, 30	25	63
		0.5	10, 15, 20, 30	25	63
		0.2S	10, 15, 20, 30	25	63
		0.2/0.2, 0.2S/0.2	10/10, 15/15, 20/20	25	63
		0.2/0.5, 0.2S/0.5	10/15, 15/15, 20/20	25	63
		0.2/10P10, 0.5/10P10	10/15, 15/15, 20/20	25	63
		0.2/10P15, 0.5/10P15	10/10, 15/15, 20/20	25	63
		0.2/0.5/10P10	15/15/15, 30/30/30	25	63
		0.5/10P10/10P20	15/15/15, 15/15/20	25	63
	300, 400	0.2	10, 15, 20, 30	31.5	80
		0.5	10, 15, 20, 30	31.5	80
		0.2S	10, 15, 20, 30	31.5	80
		0.2/0.2, 0.2S/0.2	10/10, 15/15, 20/20	31.5	80
		0.2/0.5, 0.2S/0.5	10/15, 15/15, 20/20	31.5	80
		0.2/10P10, 0.5/10P10	10/15, 15/15, 20/20	31.5	80
		0.2/10P15, 0.5/10P15	10/10, 15/15, 20/20	31.5	80
		0.2/0.5/10P10	15/15/15, 30/30/30	31.5	80
		0.5/10P10/10P20	15/15/15, 15/15/30	31.5	80
	500, 600, 630	0.2	10, 15, 20, 30	63	160
		0.5	10, 15, 20, 30	63	160
		0.2S	10, 15, 20, 30	63	160
		0.2/0.2, 0.2S/0.2	10/10, 15/15, 20/20	63	160
		0.2/0.5, 0.2S/0.5	10/15, 15/15, 20/20	63	160
		0.2/10P10, 0.5/10P10	10/15, 15/15, 15/20, 30/30	63	160
		0.2/10P15, 0.5/10P15	10/10, 15/15, 30/30	63	160
		0.2/0.5/10P10	15/15/15, 30/30/30	63	160
		0.2/0.5/10P20	15/15/15, 30/30/30	63	160
		0.2/10P10/10P20	15/15/15, 30/30/30	63	160
		0.2/0.5/10P20/10P20	15/15/15/15	63	160
	750, 800	0.2	10, 15, 20, 30	80	200
		0.5	10, 15, 20, 30	80	200
		0.2S	10, 15, 20, 30	80	200
		0.2/0.2, 0.2S/0.2	10/10, 15/15, 20/20	80	200

型号 Type	额定一次电流 Rated primary current (A)	准确级组合 Accuracy classes combination	额定输出 Rated output (VA)	额定短时热电流 Rated short-time thermal current (kA/1s)	额定动稳定电流 Rated dynamic current (kA)
LZZBJ9-36/250f/2g	750, 800	0. 2/0. 5, 0. 2S/0. 5	10/15, 15/15, 20/20	80	200
		0. 2/10P10, 0. 5/10P10	10/15, 15/15, 15/20, 30/30	80	200
		0. 2/10P15, 0. 5/10P15	10/10, 15/15, 30/30	80	200
		0. 2/10P20, 0. 5/10P20	10/10, 15/15, 30/30	80	200
		0. 2/0. 5/10P10	15/15/15, 30/30/30	80	200
		0. 2/0. 5/10P20	15/15/15, 30/30/30	80	200
	1000, 1200, 1250	0. 2	10, 15, 20, 30	100	250
		0. 5	10, 15, 20, 30	100	250
		0. 2S	10, 15, 20, 30	100	250
		0. 2/0. 2, 0. 2S/0. 2	10/10, 15/15, 20/20	100	250
		0. 2/0. 5, 0. 2S/0. 5	10/15, 15/15, 20/20	100	250
		0. 2/10P10, 0. 5/10P10	10/15, 15/15, 15/20, 30/30	100	250
		0. 2/10P15, 0. 5/10P15	10/10, 15/15, 30/30	100	250
		0. 2/10P20, 0. 5/10P20	10/10, 15/15, 30/30	100	250
		0. 2/0. 5/10P10	15/15/15, 30/30/30	100	250
		0. 2/0. 5/10P20	15/15/15, 30/30/30	100	250
	1500-2500	0. 2	10, 15, 20, 30	100	250
		0. 5	10, 15, 20, 30	100	250
		0. 2S	10, 15, 20, 30	100	250
		0. 2/0. 2, 0. 2S/0. 2	10/10, 15/15, 20/20	100	250
		0. 2/0. 5, 0. 2S/0. 5	10/15, 15/15, 20/20	100	250
		0. 2/10P10, 0. 5/10P10	10/15, 15/15, 15/20, 30/30	100	250
		0. 2/10P15, 0. 5/10P15	10/10, 15/15, 30/30	100	250
		0. 2/10P20, 0. 5/10P20	10/10, 15/15, 30/30	100	250
		0. 2/0. 5/10P10	15/15/15, 30/30/30	100	250
		0. 2/0. 5/10P20	15/15/15, 30/30/30	100	250

外形尺寸图
Overall dimensions

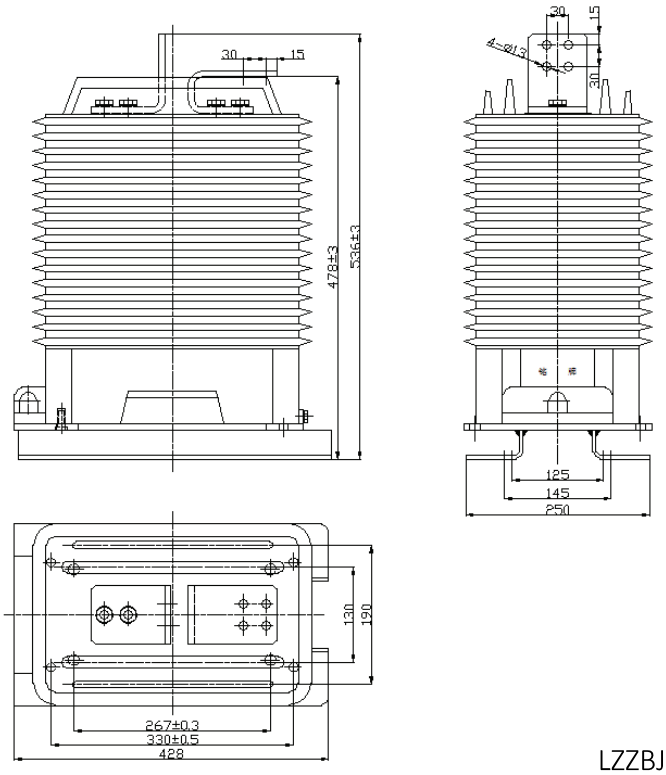

LZZBJ9-36/250f/2g
净重（Weight）：74.5-92.5kg

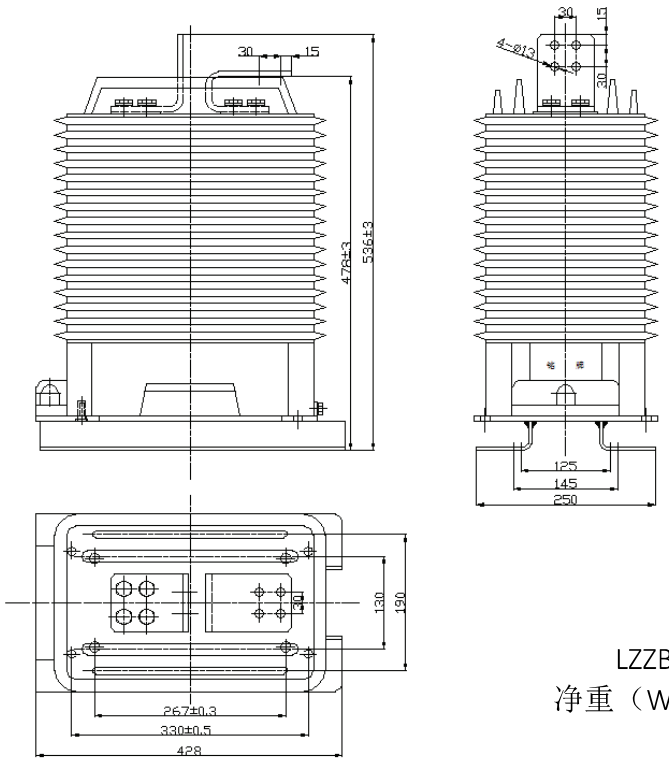

LZZBJ9-36/250f/2g
净重（Weight）：74.5-92.5kg

LZZBJ9-36/250J-2 电流互感器

额定一次电流 Rated primary current (A)	准确级组合 Accuracy classes combination	额定输出 Rated output (VA)	额定短时热电流 Rated short-time thermal current (kA/1s)	额定动稳定电流 Rated dynamic current (kA)
10	0.2, 0.5, 0.2S	10, 15	6	15
	0.2S/0.5, 0.5/10P10	10/15, 15/15	6	15
20	0.2	10, 15, 20	10	25
	0.5	10, 15, 20	10	25
	0.2S	10, 15, 20	10	25
	0.2/10P10	15/15	10	25
25	0.2	10, 15	10	25
	0.5	10, 15	10	25
	0.2S	10, 15	10	25
	0.2/0.5	10/15	10	25
	0.2/5P10, 0.5/5P10	10/15, 15/15	10	25
30	0.2	10, 15, 20	10	25
	0.5	10, 15, 20	10	25
	0.2S	10, 15, 20	10	25
	0.2/0.2	10/10, 15/15	10	25
	0.2S/0.5	10/10, 15/15	10	25
	0.2/10P10	10/10, 10/15, 15/15	10	25
	0.5/10P10	10/10, 10/15, 15/15	10	25
	0.5/10P15	10/10, 15/15	10	25
40	0.2	10, 15, 20, 30	10	25
	0.5	10, 15, 20, 30	20	50
	0.2S	10, 15, 20, 30	10	25
	0.2/0.2	10/10, 15/15, 20/20	10	25
	0.2S/0.5	10/10, 15/15, 20/20	10	25
	0.2/10P10, 0.5/10P10	10/15, 15/15, 20/20	10	25
	0.5/10P15, 0.5/10P20	10/10, 15/15	10	25
50, 60	0.2	10, 15, 20, 30	20	50
	0.5	10, 15, 20, 30	25	63
	0.2S	10, 15, 20, 30	20	50
	0.2/0.2, 0.2S/0.2	10/10, 15/15, 20/20	20	50
	0.2/0.5, 0.2S/0.5	10/15, 15/15, 20/20	20	50
	0.2/10P10, 0.5/10P10	10/15, 15/15, 20/20	20	50
	0.2/10P15, 0.5/10P15	10/10, 15/15, 20/20	10	25
	0.2/10P20, 0.5/10P20	10/10, 15/15, 20/20	10	25
	0.2/0.5/10P10	15/15/15, 30/30/30	10	25
75	0.2	10, 15, 20, 30	31.5	80
	0.5	10, 15, 20, 30	31.5	80
	0.2S	10, 15, 20, 30	31.5	80
	0.2/0.2, 0.2S/0.2	10/10, 15/15, 20/20	31.5	80
	0.2/0.5, 0.2S/0.5	10/15, 15/15, 20/20	31.5	80
	0.2/10P10, 0.5/10P10	10/15, 15/15, 20/20	31.5	80
	0.2/10P15, 0.5/10P15	10/10, 15/15, 20/20	25	63
	0.2/10P20, 0.5/10P20	10/10, 15/15, 20/20	15	38
	0.2/0.5/10P10	15/15/15, 30/30/30	15	38
100	0.2	10, 15, 20, 30	40	100
	0.5	10, 15, 20, 30	40	100
	0.2S	10, 15, 20, 30	40	100
	0.2/0.2, 0.2S/0.2	10/10, 15/15, 20/20	40	100
	0.2/0.5, 0.2S/0.5	10/15, 15/15, 20/20	40	100
	0.2/10P10, 0.5/10P10	10/15, 15/15, 20/20	40	100
	0.2/10P15, 0.5/10P15	10/10, 15/15, 20/20	40	100

额定一次电流 Rated primary current (A)	准确级组合 Accuracy classes combination	额定输出 Rated output (VA)	额定短时热电流 Rated short-time thermal current (kA/1s)	额定动稳定电流 Rated dynamic current (kA)
100	0.2/10P20, 0.5/10P20	10/10, 15/15, 20/20	20	50
	0.2/0.5/10P10	15/15/15, 30/30/30	20	50
	0.5/10P10/10P20	15/15/15, 15/15/20	20	50
125	0.2, 0.2S, 0.5	10, 15	40	100
	0.2/10P10, 0.5/10P10	15/15	40	100
	0.2/10P20, 0.5/10P20	15/15	20	50
150	0.2	10, 15, 20, 30	40	100
	0.5	10, 15, 20, 30	40	100
	0.2S	10, 15, 20, 30	40	100
	0.2/0.2, 0.2S/0.2	10/10, 15/15, 20/20	40	100
	0.2/0.5, 0.2S/0.5	10/15, 15/15, 20/20	40	100
	0.2/10P10, 0.5/10P10	10/15, 15/15, 20/20	40	100
	0.2/10P15, 0.5/10P15	10/10, 15/15, 20/20	40	100
	0.2/10P20, 0.5/10P20	10/10, 15/15, 20/20	25	63
	0.2/0.5/10P10	15/15/15, 30/30/30	25	63
	0.5/10P10/10P20	15/15/15, 15/15/20	25	63
200, 250	0.2	10, 15, 20, 30	40	100
	0.5	10, 15, 20, 30	40	100
	0.2S	10, 15, 20, 30	40	100
	0.2/0.2, 0.2S/0.2	10/10, 15/15, 20/20	40	100
	0.2/0.5, 0.2S/0.5	10/15, 15/15, 20/20	40	100
	0.2/10P10, 0.5/10P10	10/15, 15/15, 20/20	40	100
	0.2/10P15, 0.5/10P15	10/10, 15/15, 20/20	31.5	80
	0.2/10P20, 0.5/10P20	10/10, 15/15, 20/20	31.5	80
	0.2/0.5/10P10	15/15/15, 30/30/30	31.5	80
	0.5/10P10/10P20	15/15/15, 15/15/20	31.5	80
300, 400	0.2	10, 15, 20, 30	63	160
	0.5	10, 15, 20, 30	63	160
	0.2S	10, 15, 20, 30	63	160
	0.2/0.2, 0.2S/0.2	10/10, 15/15, 20/20	63	160
	0.2/0.5, 0.2S/0.5	10/15, 15/15, 20/20	63	160
	0.2/10P10, 0.5/10P10	10/15, 15/15, 20/20	63	160
	0.2/10P15, 0.5/10P15	10/10, 15/15, 20/20	40	100
	0.2/10P20, 0.5/10P20	10/10, 15/15, 20/20	40	100
	0.2/0.5/10P10	15/15/15, 30/30/30	40	100
	0.5/10P10/10P20	15/15/15, 15/15/30	40	100
500, 600, 630	0.2	10, 15, 20, 30	63	160
	0.5	10, 15, 20, 30	63	160
	0.2S	10, 15, 20, 30	63	160
	0.2/0.2, 0.2S/0.2	10/10, 15/15, 20/20	63	160
	0.2/0.5, 0.2S/0.5	10/15, 15/15, 20/20	63	160
	0.2/10P10, 0.5/10P10	10/15, 15/15, 15/20, 30/30	63	160
	0.2/10P15, 0.5/10P15	10/10, 15/15, 30/30	63	160
	0.2/10P20, 0.5/10P20	10/10, 15/15, 30/30	63	160
	0.2/0.5/10P10	15/15/15, 30/30/30	63	160
	0.2/0.5/10P20	15/15/15, 30/30/30	63	160
	0.2/10P10/10P20	15/15/15, 30/30/30	63	160
	0.2/0.5/10P20/10P20	15/15/15/15	63	160
750, 800	0.2	10, 15, 20, 30	80	200
	0.5	10, 15, 20, 30	80	200
	0.2S	10, 15, 20, 30	80	200
	0.2/0.2, 0.2S/0.2	10/10, 15/15, 20/20	80	200
	0.2/0.5, 0.2S/0.5	10/15, 15/15, 20/20	80	200

额定一次电流 Rated primary current (A)	准确级组合 Accuracy classes combination	额定输出 Rated output (VA)	额定短时热电流 Rated short-time thermal current (kA/1s)	额定动稳定电流 Rated dynamic current (kA)
750, 800	0. 2/10P10, 0. 5/10P10	10/15, 15/15, 15/20, 30/30	80	200
	0. 2/10P15, 0. 5/10P15	10/10, 15/15, 30/30	80	200
	0. 2/10P20, 0. 5/10P20	10/10, 15/15, 30/30	80	200
	0. 2/0. 5/10P10	15/15/15, 30/30/30	80	200
	0. 2/0. 5/10P20	15/15/15, 30/30/30	80	200
	0. 2/10P10/10P20	15/15/15, 30/30/30	80	200
	0. 2/0. 5/10P20/10P20	15/15/20/20	80	200
1000, 1200, 1250	0. 2	10, 15, 20, 30	100	250
	0. 5	10, 15, 20, 30	100	250
	0. 2S	10, 15, 20, 30	100	250
	0. 2/0. 2, 0. 2S/0. 2	10/10, 15/15, 20/20	100	250
	0. 2/0. 5, 0. 2S/0. 5	10/15, 15/15, 20/20	100	250
	0. 2/10P10, 0. 5/10P10	10/15, 15/15, 15/20, 30/30	100	250
	0. 2/10P15, 0. 5/10P15	10/10, 15/15, 30/30	100	250
	0. 2/10P20, 0. 5/10P20	10/10, 15/15, 30/30	100	250
	0. 2/0. 5/10P10	15/15/15, 30/30/30	100	250
	0. 2/0. 5/10P20	15/15/15, 30/30/30	100	250
	0. 2/10P10/10P20	15/15/15, 30/30/30	100	250
	0. 2/0. 5/10P20/10P20	15/15/30/30	100	250

外形尺寸图
Overall dimensions

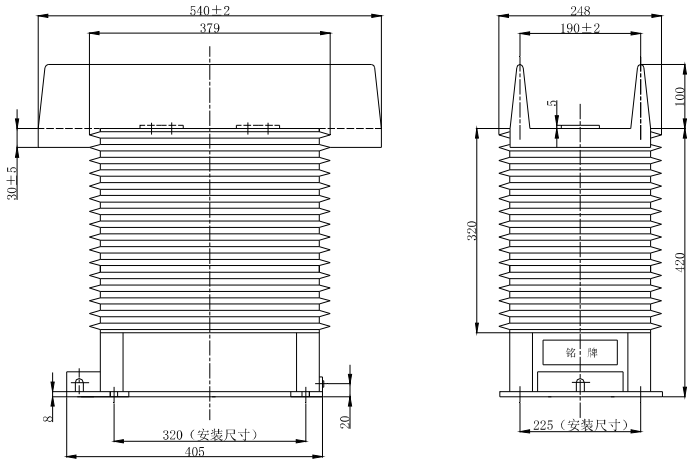

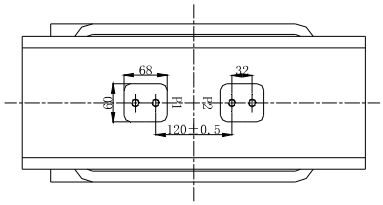

LZZBJ9-36/250J-2
净重（Weight）：85kg

LZZBJ9-36/250J 电流互感器

额定一次电流 Rated primary current (A)	准确级组合 Accuracy classes combination	额定输出 Rated output (VA)	额定短时热电流 Rated short-time thermal current (kA/1s)	额定动稳定电流 Rated dynamic current (kA)
1500-2500	0.2	10, 15, 20, 30	100	250
	0.5	10, 15, 20, 30	100	250
	0.2S	10, 15, 20, 30	100	250
	0.2/0.2, 0.2S/0.2	10/10, 15/15, 20/20	100	250
	0.2/0.5, 0.2S/0.5	10/15, 15/15, 20/20	100	250
	0.2/10P10, 0.5/10P10	10/15, 15/15, 15/20, 30/30	100	250
	0.2/10P15, 0.5/10P15	10/10, 15/15, 30/30	100	250
	0.2/10P20, 0.5/10P20	10/10, 15/15, 30/30	100	250
	0.2/0.5/10P10	15/15/15, 30/30/30	100	250
	0.2/0.5/10P20	15/15/15, 30/30/30	100	250
	0.2/10P10/10P20	15/15/15, 30/30/30	100	250
	0.2/0.5/10P20/10P20	15/15/30/30	100	250

外形尺寸图
Overall dimensions

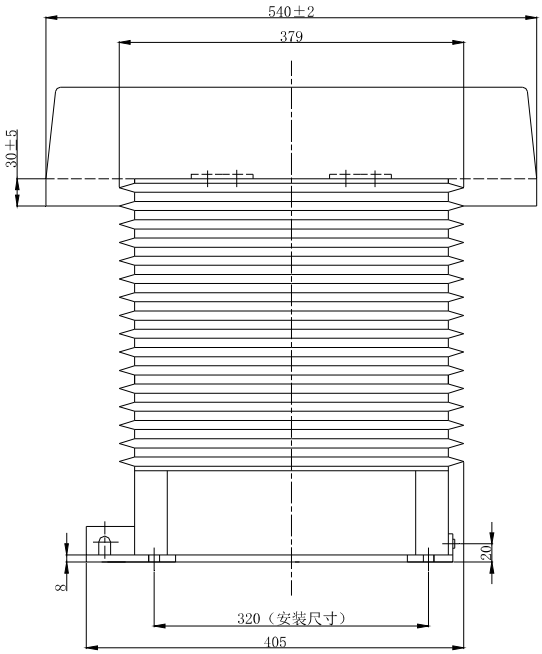

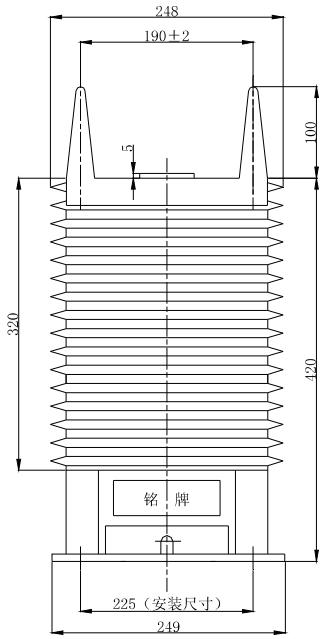

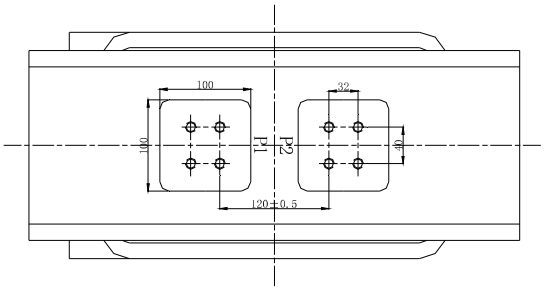

LZZBJ9-36/250J
净重（Weight）：85kg

LZZBJ9-36/300f/2G-2 电流互感器

额定一次电流 Rated primary current (A)	准确级组合 Accuracy classes combination	额定输出 Rated output (VA)	额定短时热电流 Rated short-time thermal current (kA/1s)	额定动稳定电流 Rated dynamic current (kA)
10	0.2, 0.5, 0.2S	15, 20	6	15
	0.2S/0.5, 0.5/10P10	15/15, 20/20	6	15
20	0.2	15, 20, 30	10	25
	0.5	15, 20, 30	10	25
	0.2S	15, 20, 30	10	25
	0.2/10P10	20/20	10	25
25	0.2	15, 20, 30	10	25
	0.5	15, 20, 30	10	25
	0.2S	15, 20, 30	10	25
	0.2/0.5	20/20	10	25
	0.2/5P10, 0.5/5P10	20/20，30/20	10	25
30	0.2	15, 20, 30	10	25
	0.5	15, 20, 30	10	25
	0.2S	15, 20, 30	10	25
	0.2/0.2	20/20	10	25
	0.2S/0.5	20/20, 20/30	10	25
	0.2/10P10	20/20, 30/20	10	25
	0.5/10P10	20/20, 30/20	10	25
	0.5/10P15	20/20, 30/20	10	25
40	0.2	15, 20, 30	10	25
	0.5	15, 20, 30	20	50
	0.2S	15, 20, 30	10	25
	0.2/0.2	20/20	10	25
	0.2S/0.5	20/20	10	25
	0.2/10P10, 0.5/10P10	20/20, 30/20	10	25
	0.5/10P15, 0.5/10P20	20/20, 30/20	10	25
50, 60	0.2	15, 20, 30	20	50
	0.5	15, 20, 30	25	63
	0.2S	15, 20, 30	20	50
	0.2/0.2, 0.2S/0.2	15/15, 20/20, 20/30	20	50
	0.2/0.5, 0.2S/0.5	15/15, 20/20, 20/30	20	50
	0.2/10P10, 0.5/10P10	20/20, 30/20	20	50
	0.2/10P15, 0.5/10P15	20/20, 30/20	10	25
	0.2/10P20, 0.5/10P20	20/20, 30/20	10	25
	0.2/0.5/10P10	15/15/15, 30/30/30	10	25
75	0.2	15, 20, 30	31.5	80
	0.5	15, 20, 30	31.5	80
	0.2S	15, 20, 30	31.5	80
	0.2/0.2, 0.2S/0.2	15/15, 20/20, 20/30	31.5	80
	0.2/0.5, 0.2S/0.5	15/15, 20/20, 20/30	31.5	80
	0.2/10P10, 0.5/10P10	20/20, 30/20	31.5	80
	0.2/10P15, 0.5/10P15	20/20, 30/20	25	63
	0.2/10P20, 0.5/10P20	20/20, 30/20	15	38
	0.2/0.5/10P10	15/15/15, 30/30/30	15	38
100	0.2	15, 20, 30	40	100
	0.5	15, 20, 30	40	100
	0.2S	15, 20, 30	40	100
	0.2/0.2, 0.2S/0.2	15/15, 20/20, 20/30	40	100
	0.2/0.5, 0.2S/0.5	15/15, 20/20, 20/30	40	100
	0.2/10P10, 0.5/10P10	20/20, 30/20	40	100
	0.2/10P15, 0.5/10P15	20/20, 30/20	20	50

额定一次电流 Rated primary current (A)	准确级组合 Accuracy classes combination	额定输出 Rated output (VA)	额定短时热电流 Rated short-time thermal current (kA/1s)	额定动稳定电流 Rated dynamic current (kA)
100	0.2/10P20, 0.5/10P20	20/20, 30/20	20	50
	0.2/0.5/10P10	15/15/15, 30/30/30	20	50
	0.5/10P10/10P20	15/15/15, 15/15/20	20	50
125	0.2, 0.2S, 0.5	15, 20	40	100
	0.2/10P10, 0.5/10P10	20/20, 30/20	40	100
	0.2/10P20, 0.5/10P20	20/20, 30/20	20	50
150	0.2	15, 20, 30	50	125
	0.5	15, 20, 30	50	125
	0.2S	15, 20, 30	50	125
	0.2/0.2, 0.2S/0.2	15/15, 20/20, 20/30	50	125
	0.2/0.5, 0.2S/0.5	15/15, 20/20, 20/30	50	125
	0.2/10P10, 0.5/10P10	20/20, 30/20	50	125
	0.2/10P15, 0.5/10P15	20/20, 30/20	50	125
	0.2/10P20, 0.5/10P20	20/20, 30/20	25	63
	0.2/0.5/10P10	15/15/15, 30/30/30	25	63
	0.5/10P10/10P20	15/15/15, 15/15/20	25	63
200，250	0.2	15, 20, 30	50	125
	0.5	15, 20, 30	50	125
	0.2S	15, 20, 30	50	125
	0.2/0.2, 0.2S/0.2	15/15, 20/20, 20/30	50	125
	0.2/0.5, 0.2S/0.5	15/15, 20/20, 20/30	50	125
	0.2/10P10, 0.5/10P10	20/20, 30/20	50	125
	0.2/10P15, 0.5/10P15	20/20, 30/20	31.5	80
	0.2/10P20, 0.5/10P20	20/20, 30/20	31.5	80
	0.2/0.5/10P10	15/15/15, 30/30/30	31.5	80
	0.5/10P10/10P20	15/15/15, 15/15/20	31.5	80
300, 400	0.2	15, 20, 30	63	160
	0.5	15, 20, 30	63	160
	0.2S	15, 20, 30	63	160
	0.2/0.2, 0.2S/0.2	15/15, 20/20, 20/30	63	160
	0.2/0.5, 0.2S/0.5	15/15, 20/20, 20/30	63	160
	0.2/10P10, 0.5/10P10	20/20, 30/20	63	160
	0.2/10P15, 0.5/10P15	20/20, 30/20	40	100
	0.2/10P20, 0.5/10P20	20/20, 30/20	40	100
	0.2/0.5/10P10	15/15/15, 30/30/30	40	100
	0.5/10P10/10P20	15/15/15, 15/15/20	40	100
500, 600, 630	0.2	15, 20, 30	63	160
	0.5	15, 20, 30	63	160
	0.2S	15, 20, 30	63	160
	0.2/0.2, 0.2S/0.2	15/15, 20/20, 20/30	63	160
	0.2/0.5, 0.2S/0.5	15/15, 20/20, 20/30	63	160
	0.2/10P10, 0.5/10P10	20/20, 30/20	63	160
	0.2/10P15, 0.5/10P15	20/20, 30/20	63	160
	0.2/10P20, 0.5/10P20	20/20, 30/20	63	160
	0.2/0.5/10P10	15/15/15, 30/30/30	63	160
	0.2/0.5/10P20	15/15/15, 30/30/30	63	160
	0.2/10P10/10P20	15/15/15, 30/30/30	63	160
	0.2/0.5/10P20/10P20	15/15/15/15	63	160
750，800	0.2	15，20，30，40	80	200
	0.5	15，20，30，40	80	200
	0.2S	15，20，30，50	80	200
	0.2/0.2, 0.2S/0.2	15/15，20/20，30/30，40/40	80	200
	0.2/0.5, 0.2S/0.5	15/15，20/20，30/30，40/40	80	200

额定一次电流 Rated primary current (A)	准确级组合 Accuracy classes combination	额定输出 Rated output (VA)	额定短时热电流 Rated short-time thermal current (kA/1s)	额定动稳定电流 Rated dynamic current (kA)
750，800	0.2/10P10, 0.5/10P10	15/15，40/40	80	200
	0.2/10P15, 0.5/10P15	15/15，40/40	80	200
	0.2/10P20, 0.5/10P20	15/15，40/40	80	200
	0.2/0.5/10P10	15/15/15，40/40/40	80	200
	0.2/0.5/10P20	15/15/15，40/40/40	80	200
	0.2/10P10/10P20	15/15/15，40/40/40	80	200
	0.2/0.5/10P20/10P20	20/20/20/20	80	200
1000-1250	0.2	15，20，30，40	100	250
	0.5	15，20，30，40	100	250
	0.2S	15，20，30，50	100	250
	0.2/0.2, 0.2S/0.2	15/15，20/20，30/30，40/40	100	250
	0.2/0.5, 0.2S/0.5	15/15，20/20，30/30，40/40	100	250
	0.2/10P10, 0.5/10P10	15/15，40/40	100	250
	0.2/10P15, 0.5/10P15	15/15，40/40	100	250
	0.2/10P20, 0.5/10P20	15/15，40/40	100	250
	0.2/0.5/10P10	15/15/15，40/40/40	100	250
	0.2/0.5/10P20	15/15/15，40/40/40	100	250
	0.2/10P10/10P20	15/15/15，40/40/40	100	250
	0.2/0.5/10P20/10P20	20/20/30/30	100	250

外形尺寸图 Overall dimensions

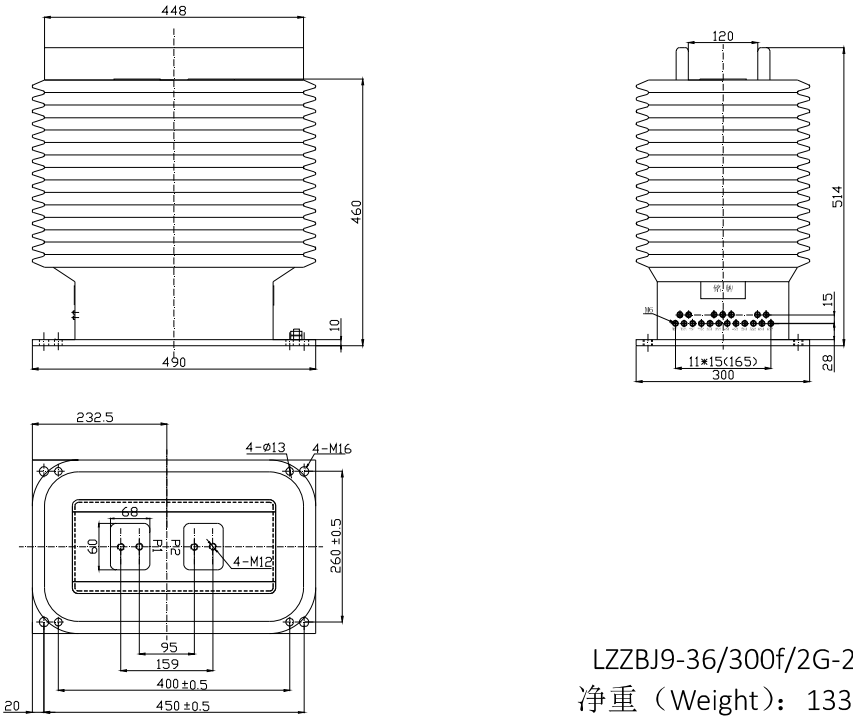

LZZBJ9-36/300f/2G-2

净重（Weight）：133kg

LZZBJ9-36/300f/2G 电流互感器

额定一次电流 Rated primary current (A)	准确级组合 Accuracy classes combination	额定输出 Rated output (VA)	额定短时热电流 Rated short-time thermal current (kA/1s)	额定动稳定电流 Rated dynamic current (kA)
10	0.2，0.5，0.2S	15, 20	6	15
	0.2S/0.5, 0.5/10P10	15/15, 20/20	6	15
20	0.2	15, 20, 30	10	25
	0.5	15, 20, 30	10	25
	0.2S	15, 20, 30	10	25
	0.2/10P10	20/20	10	25
25	0.2	15, 20, 30	10	25
	0.5	15, 20, 30	10	25
	0.2S	15, 20, 30	10	25
	0.2/0.5	20/20	10	25
	0.2/5P10, 0.5/5P10	20/20，30/20	10	25
30	0.2	15, 20, 30	10	25
	0.5	15, 20, 30	10	25
	0.2S	15, 20, 30	10	25
	0.2/0.2	20/20	10	25
	0.2S/0.5	20/20, 20/30	10	25
	0.2/10P10	20/20, 30/20	10	25
	0.5/10P10	20/20, 30/20	10	25
	0.5/10P15	20/20, 30/20	10	25
40	0.2	15, 20, 30	10	25
	0.5	15, 20, 30	20	50
	0.2S	15, 20, 30	10	25
	0.2/0.2	20/20	10	25
	0.2S/0.5	20/20	10	25
	0.2/10P10, 0.5/10P10	20/20, 30/20	10	25
	0.5/10P15, 0.5/10P20	20/20, 30/20	10	25
50, 60	0.2	15, 20, 30	20	50
	0.5	15, 20, 30	25	63
	0.2S	15, 20, 30	20	50
	0.2/0.2, 0.2S/0.2	15/15, 20/20, 20/30	20	50
	0.2/0.5, 0.2S/0.5	15/15, 20/20, 20/30	20	50
	0.2/10P10, 0.5/10P10	20/20, 30/20	20	50
	0.2/10P15, 0.5/10P15	20/20, 30/20	10	25
	0.2/10P20, 0.5/10P20	20/20, 30/20	10	25
	0.2/0.5/10P10	15/15/15, 30/30/30	10	25
75	0.2	15, 20, 30	31.5	80
	0.5	15, 20, 30	31.5	80
	0.2S	15, 20, 30	31.5	80
	0.2/0.2, 0.2S/0.2	15/15, 20/20, 20/30	31.5	80
	0.2/0.5, 0.2S/0.5	15/15, 20/20, 20/30	31.5	80
	0.2/10P10, 0.5/10P10	20/20, 30/20	31.5	80
	0.2/10P15, 0.5/10P15	20/20, 30/20	25	63
	0.2/10P20, 0.5/10P20	20/20, 30/20	15	38
	0.2/0.5/10P10	15/15/15, 30/30/30	15	38
100	0.2	15, 20, 30	40	100
	0.5	15, 20, 30	40	100
	0.2S	15, 20, 30	40	100
	0.2/0.2, 0.2S/0.2	15/15, 20/20, 20/30	40	100
	0.2/0.5, 0.2S/0.5	15/15, 20/20, 20/30	40	100
	0.2/10P10, 0.5/10P10	20/20, 30/20	40	100
	0.2/10P15, 0.5/10P15	20/20, 30/20	20	50

额定一次电流 Rated primary current (A)	准确级组合 Accuracy classes combination	额定输出 Rated output (VA)	额定短时热电流 Rated short-time thermal current (kA/1s)	额定动稳定电流 Rated dynamic current (kA)
100	0.2/10P20, 0.5/10P20	20/20, 30/20	20	50
	0.2/0.5/10P10	15/15/15, 30/30/30	20	50
	0.5/10P10/10P20	15/15/15, 15/15/20	20	50
125	0.2, 0.2S, 0.5	15, 20	40	100
	0.2/10P10, 0.5/10P10	20/20, 30/20	40	100
	0.2/10P20, 0.5/10P20	20/20, 30/20	20	50
150	0.2	15, 20, 30	50	125
	0.5	15, 20, 30	50	125
	0.2S	15, 20, 30	50	125
	0.2/0.2, 0.2S/0.2	15/15, 20/20, 20/30	50	125
	0.2/0.5, 0.2S/0.5	15/15, 20/20, 20/30	50	125
	0.2/10P10, 0.5/10P10	20/20, 30/20	50	125
	0.2/10P15, 0.5/10P15	20/20, 30/20	50	125
	0.2/10P20, 0.5/10P20	20/20, 30/20	25	63
	0.2/0.5/10P10	15/15/15, 30/30/30	25	63
	0.5/10P10/10P20	15/15/15, 15/15/20	25	63
200，250	0.2	15, 20, 30	50	125
	0.5	15, 20, 30	50	125
	0.2S	15, 20, 30	50	125
	0.2/0.2, 0.2S/0.2	15/15, 20/20, 20/30	50	125
	0.2/0.5, 0.2S/0.5	15/15, 20/20, 20/30	50	125
	0.2/10P10, 0.5/10P10	20/20, 30/20	50	125
	0.2/10P15, 0.5/10P15	20/20, 30/20	31.5	80
	0.2/10P20, 0.5/10P20	20/20, 30/20	31.5	80
	0.2/0.5/10P10	15/15/15, 30/30/30	31.5	80
	0.5/10P10/10P20	15/15/15, 15/15/20	31.5	80
300, 400	0.2	15, 20, 30	63	160
	0.5	15, 20, 30	63	160
	0.2S	15, 20, 30	63	160
	0.2/0.2, 0.2S/0.2	15/15, 20/20, 20/30	63	160
	0.2/0.5, 0.2S/0.5	15/15, 20/20, 20/30	63	160
	0.2/10P10, 0.5/10P10	20/20, 30/20	63	160
	0.2/10P15, 0.5/10P15	20/20, 30/20	40	100
	0.2/10P20, 0.5/10P20	20/20, 30/20	40	100
	0.2/0.5/10P10	15/15/15, 30/30/30	40	100
	0.5/10P10/10P20	15/15/15, 15/15/20	40	100
500, 600, 630	0.2	15, 20, 30	63	160
	0.5	15, 20, 30	63	160
	0.2S	15, 20, 30	63	160
	0.2/0.2, 0.2S/0.2	15/15, 20/20, 20/30	63	160
	0.2/0.5, 0.2S/0.5	15/15, 20/20, 20/30	63	160
	0.2/10P10, 0.5/10P10	20/20, 30/20	63	160
	0.2/10P15, 0.5/10P15	20/20, 30/20	63	160
	0.2/10P20, 0.5/10P20	20/20, 30/20	63	160
	0.2/0.5/10P10	15/15/15, 30/30/30	63	160
	0.2/0.5/10P20	15/15/15, 30/30/30	63	160
	0.2/10P10/10P20	15/15/15, 30/30/30	63	160
	0.2/0.5/10P20/10P20	15/15/15/15	63	160
750，800	0.2	15，20，30，40	80	200
	0.5	15，20，30，40	80	200
	0.2S	15，20，30，50	80	200
	0.2/0.2, 0.2S/0.2	40/40	80	200
	0.2/0.5, 0.2S/0.5	40/40	80	200

额定一次电流 Rated primary current (A)	准确级组合 Accuracy classes combination	额定输出 Rated output (VA)	额定短时热电流 Rated short-time thermal current (kA/1s)	额定动稳定电流 Rated dynamic current (kA)
750，800	0.2/10P10, 0.5/10P10	15/15，40/40	80	200
	0.2/10P15, 0.5/10P15	15/15，40/40	80	200
	0.2/10P20, 0.5/10P20	15/15，40/40	80	200
	0.2/0.5/10P10	15/15/15，40/40/40	80	200
	0.2/0.5/10P20	15/15/15，40/40/40	80	200
	0.2/10P10/10P20	15/15/15，40/40/40	80	200
	0.2/0.5/10P20/10P20	20/20/20/20	80	200
1000-1250	0.2	15，20，30，40	100	250
	0.5	15，20，30，40	100	250
	0.2S	15，20，30，50	100	250
	0.2/0.2, 0.2S/0.2	15/15，20/20，30/30，40/40	100	250
	0.2/0.5, 0.2S/0.5	15/15，20/20，30/30，40/40	100	250
	0.2/10P10, 0.5/10P10	15/15，40/40	100	250
	0.2/10P15, 0.5/10P15	15/15，40/40	100	250
	0.2/10P20, 0.5/10P20	15/15，40/40	100	250
	0.2/0.5/10P10	15/15/15，40/40/40	100	250
	0.2/0.5/10P20	15/15/15，40/40/40	100	250
	0.2/10P10/10P20	15/15/15，40/40/40	100	250
	0.2/0.5/10P20/10P20	20/20/30/30	100	250
1500-3150	0.2	15，20，30，40	100	250
	0.5	15，20，30，40	100	250
	0.2S	15，20，30，50	100	250
	0.2/0.2, 0.2S/0.2	15/15，20/20，30/30，40/40	100	250
	0.2/0.5, 0.2S/0.5	15/15，20/20，30/30，40/40	100	250
	0.2/10P10, 0.5/10P10	15/15，40/40	100	250
	0.2/10P15, 0.5/10P15	15/15，40/40	100	250
	0.2/10P20, 0.5/10P20	15/15，40/40	100	250
	0.2/0.5/10P10	15/15/15，40/40/40	100	250
	0.2/0.5/10P20	15/15/15，40/40/40	100	250
	0.2/10P10/10P20	15/15/15，40/40/40	100	250
	0.2/0.5/10P20/10P20	20/20/30/30	100	250

外形尺寸图
Overall dimensions

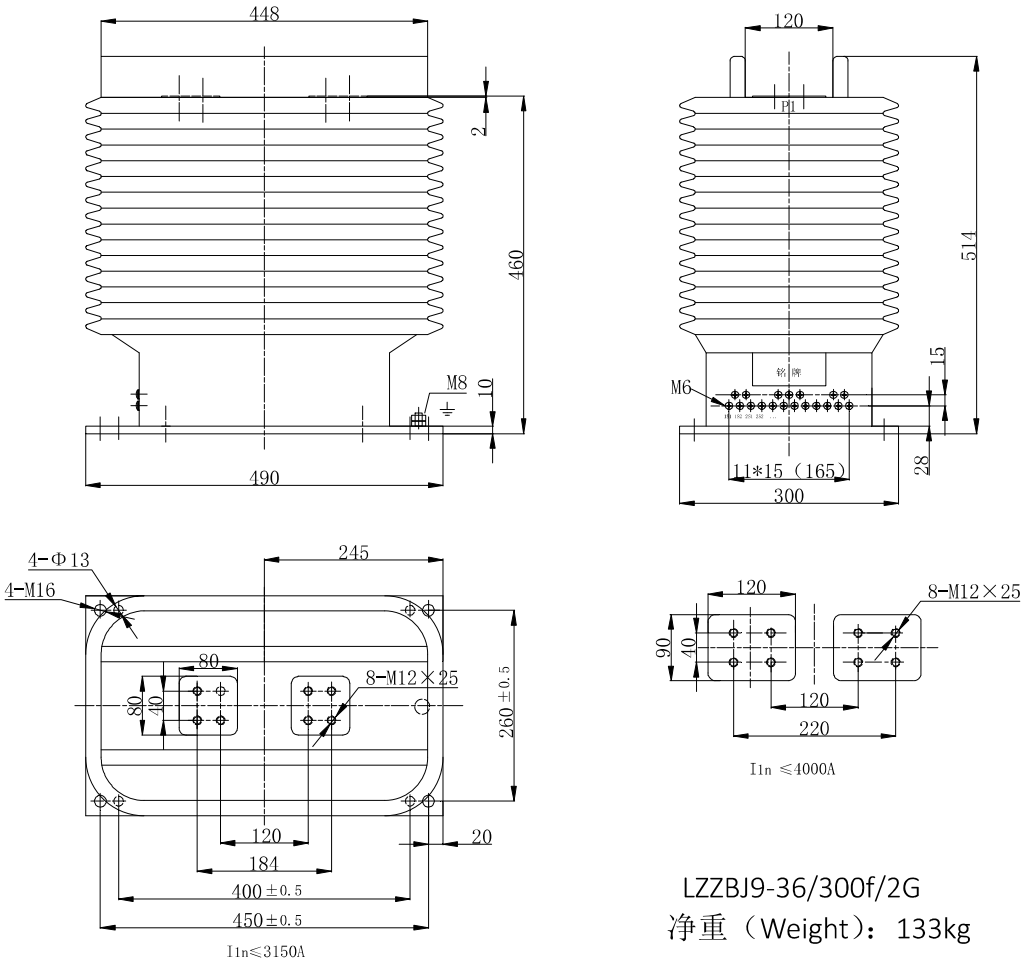

LZZBJ9-36/300f/2G
净重（Weight）：133kg

LZZBT-27.5 型电流互感器

型号 Type	额定一次电流 Rated primary current (A)	准确级组合 Accuracy classes combination	额定输出 Rated output (VA)	额定短时热电流 Rated short-time thermal current (kA/1s)	额定动稳定电流 Rated dynamic current (kA)
LZZBT-27.5	1000-2000 （区间）	0.2S/5P10	50/60	100	250
		0.5/5P10	50/60	100	250
		0.2S/10P10	50/60	100	250
		0.5/10P10	50/60	100	250
		0.2S/5P20	30/30	100	250
		0.5/5P20	30/30	100	250
		0.2S/10P20	30/30	100	250
		0.5/10P20	30/30	100	250

外形尺寸图 Overall dimensions

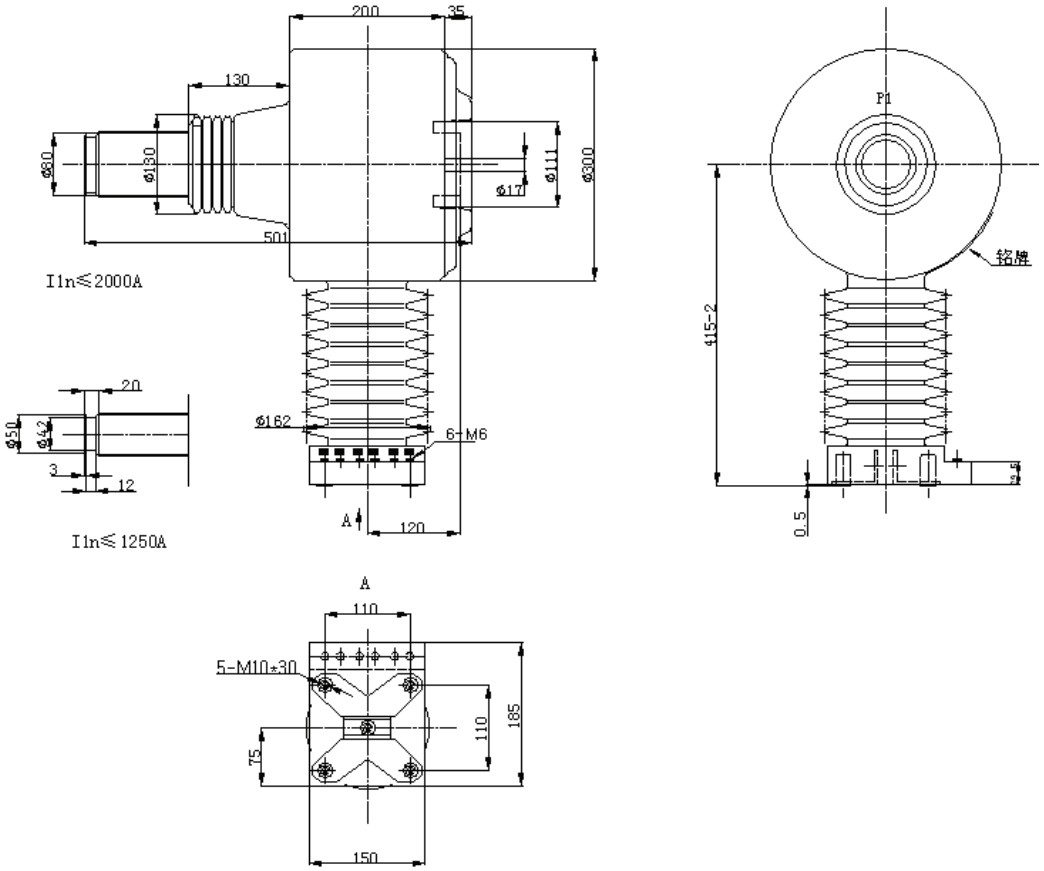

LZZBT-27.5

净重（Weight）：39kg

LZZBJ9-36/250f/2-2 代电流互感器

外形尺寸图 Overall dimensions

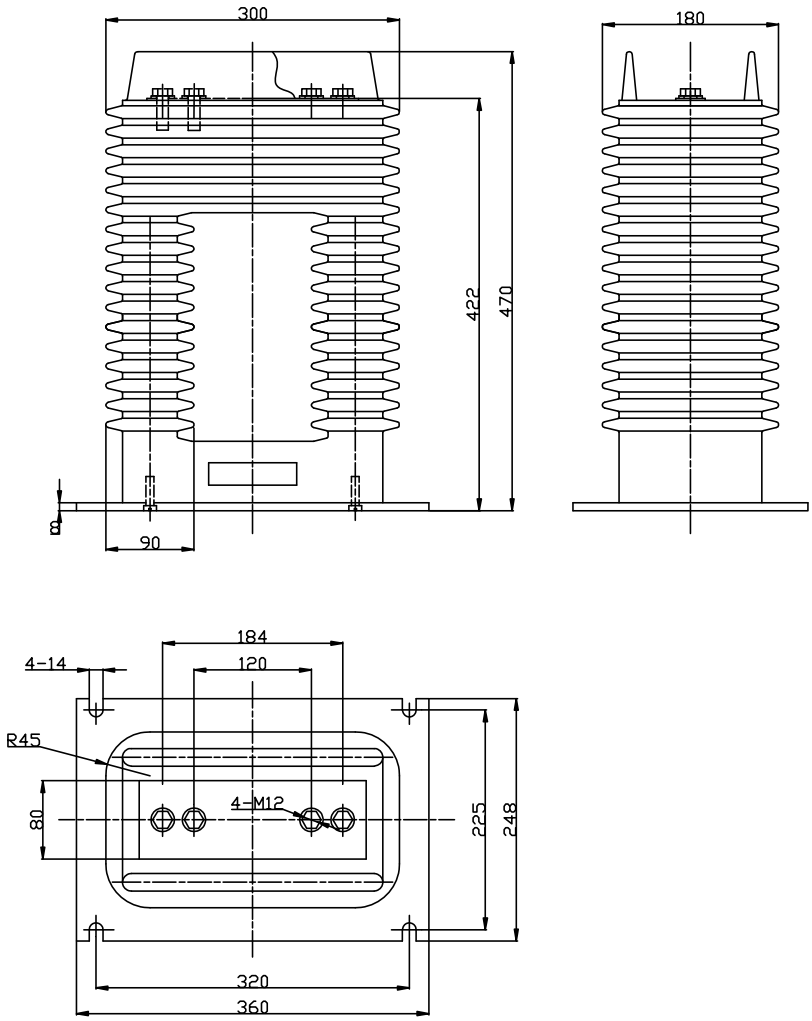

LZZBJ9-36/250f/2-2 代电流互感器
额定一次电流：1250A
净重（Weight）：31kg

LZZBJ9-36/250f/2 代电流互感器

外形尺寸图 Overall dimensions

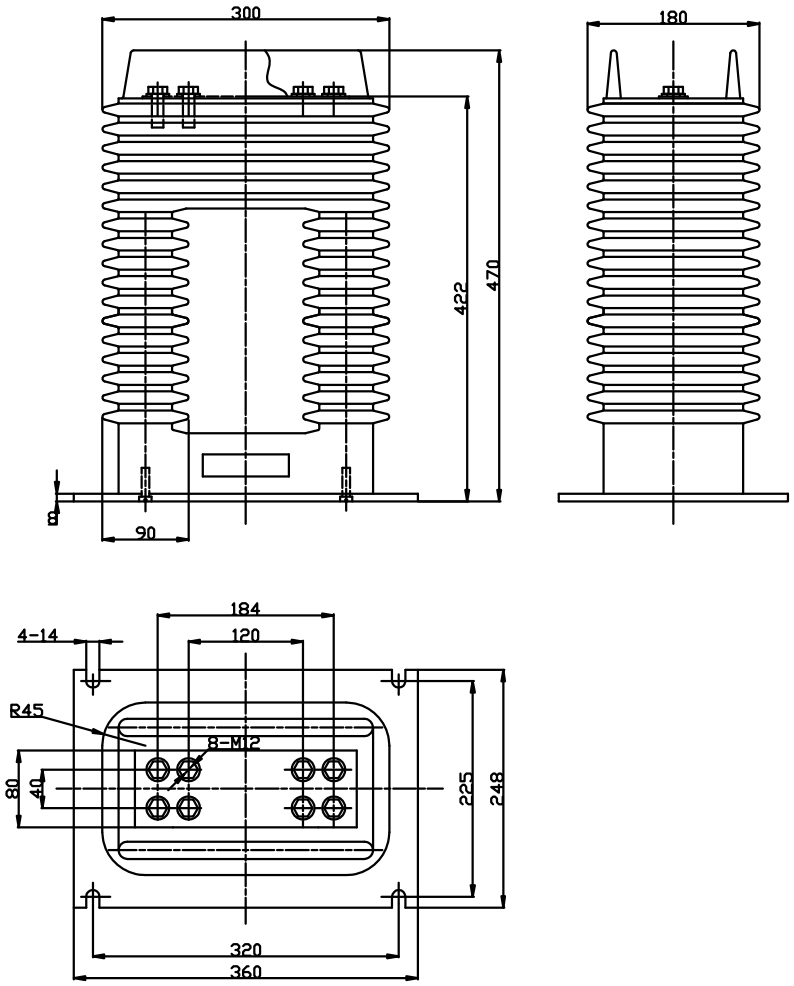

LZZBJ9-36/250f/2 代电流互感器
额定一次电流：2500A
净重（Weight）：31kg

二、户内浇注电压互感器

10kv 电压互感器

FDGR-1.7/11/√3-1 放电线圈

型号 Type	电压比 Voltage ratio(V)	准确级及额定输出(VA) cos Φ =0.8 Accuracy class and Rated output(VA)					极限输出 Max. output(VA)
		0.2	0.5	1.0	3.0	6P(3P)	
FDGR-1.7/11/√3-1	6000：√3/100：√3, 100:3	15	30	80	80	30	200
	10000：√3/100：√3, 100:3	25	50	80	100	50	400

外形尺寸图
Overall dimensions

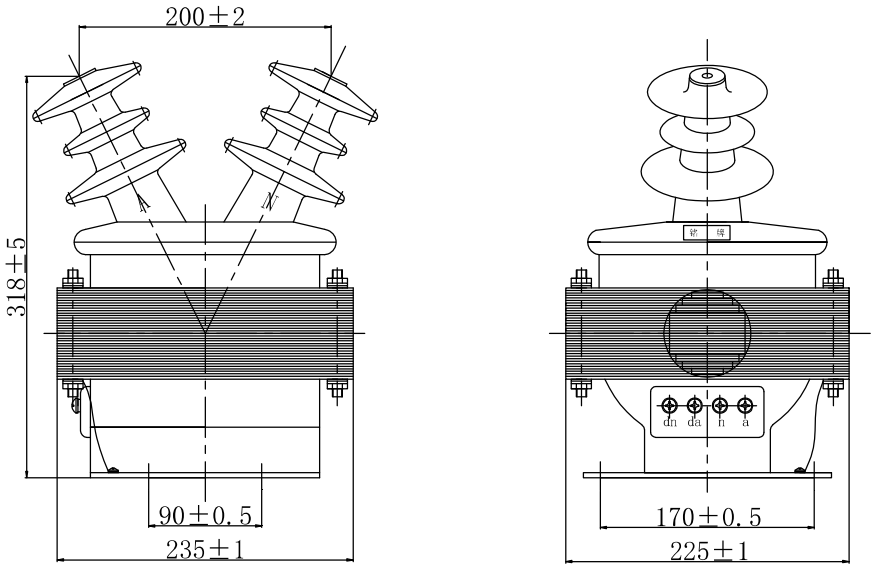

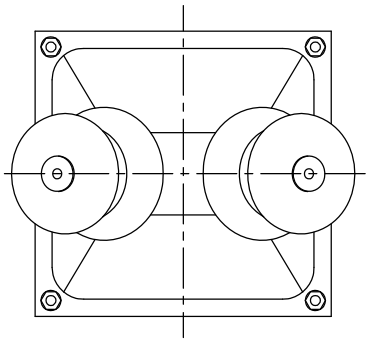

净重(Weight)：30kg

JDZ7-10 电压互感器

电压比 Voltage ratio(V)	额定绝缘水平 Rated insulation(kV)	准确级及额定输出 Accuracy class and Rated output(VA)	极限输出 Max. output(VA)
3000/100	3.6/25/40	0.2-30 0.5-75 1.0-150 3.0-300	600
3000/110			
3300/100			
6000/100	7.2/30/60		
6300/100			
6600/100			
6600/110			
10000/100	12/42/75		
10500/100			
11000/110			

外形尺寸图
Overall dimensions

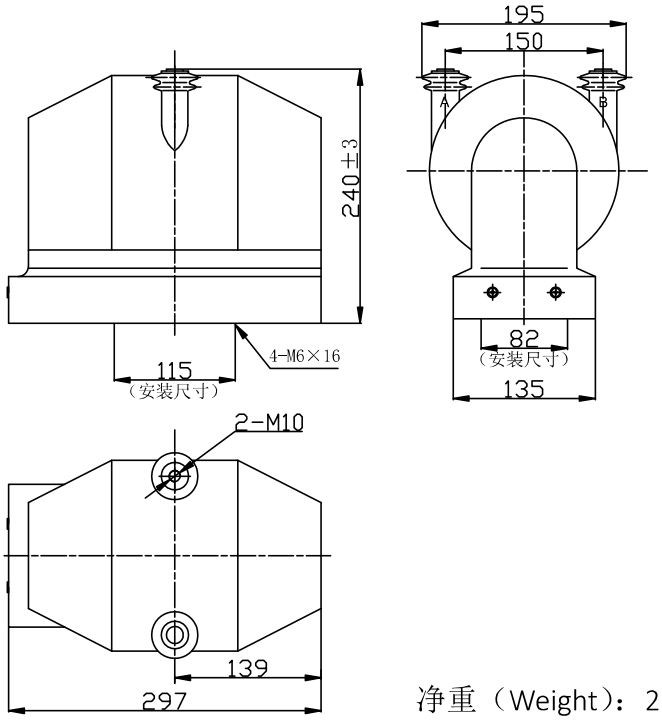

净重（Weight）：23.5kg

JDZ7-10 型电压互感器参见接线图 1-图 2
Type JDZ7-10 voltage transformer see figure1-figure2

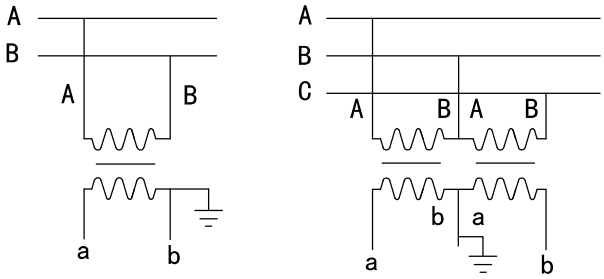

图一
Figure1

图二
Figure2

JDZ8-10、JDZ8-10R 型电压互感器

型号 Type	电压比 Voltage ratio(V)	额定绝缘水平 Rated insulation(kV)	准确级及额定输出 Accuracy class and Rated output(VA)	极限输出 Max. output(VA)
JDZ8-10 JDZ8-10R	3000/100	3.6/25/40	0.2-25 0.5-75 1.0-150 3.0-300	400
	3000/110			
	3300/100			
	6000/100	7.2/30/60		
	6300/100			
	6600/100			
	6600/110			
	10000/100	12/42/75		
	10500/100			
	11000/110			

外形尺寸图
Overall dimensions

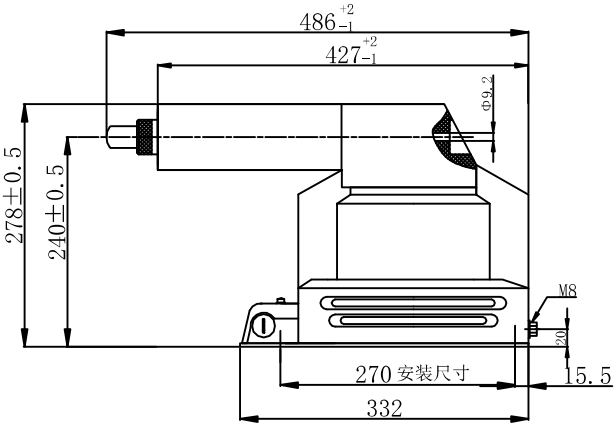

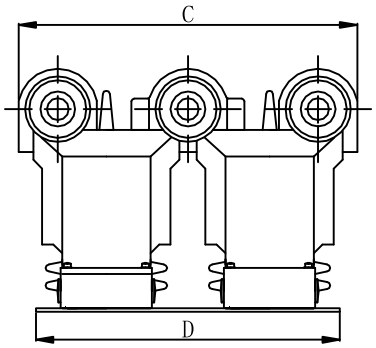

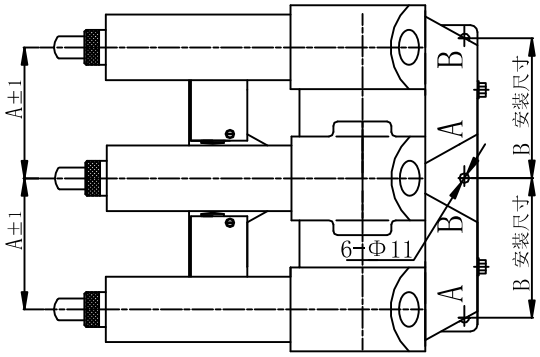

型号 Type	A	B	C	D
JDZ8-10R/150	150	160	390	350
JDZ8-10R/210	210	220	510	470
JDZ8-10R/275	275	285	640	600

净重（Weight）：50kg
熔断器尺寸：Φ50（max）mm×260（全长）mm（订货时另注明，本体不配熔断器）

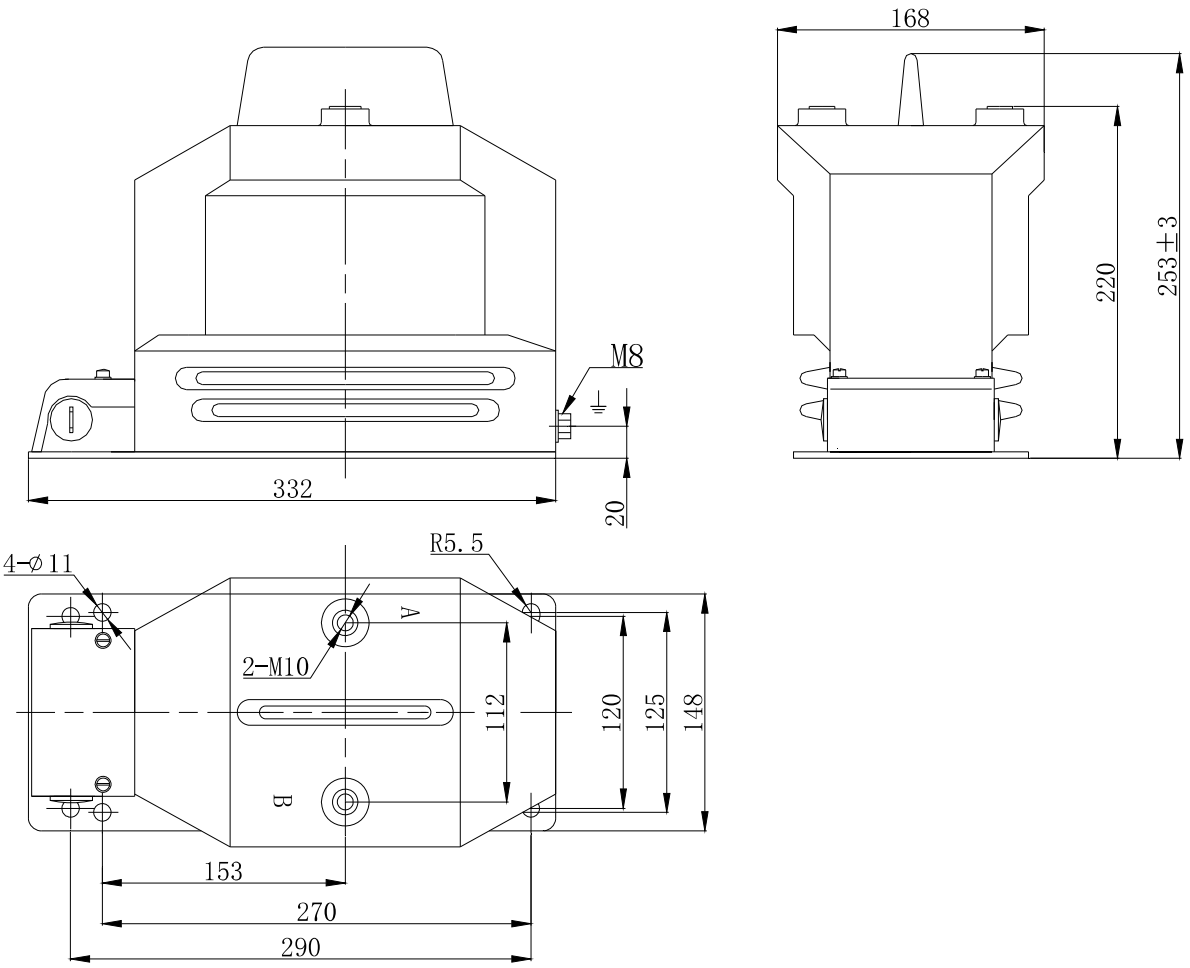

JDZ8-10　　净重（Weight）：21kg

JDZ8-10　JDZ8-10R 型电压互感器参见接线图 1-图 2;
Type JDZ8-10　JDZ8-10R voltage transformer see figure1-figure2

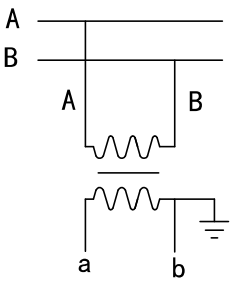

图 1
Figure1

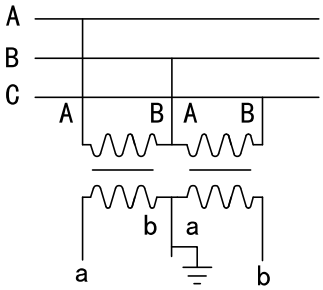

图 2
Figure2

JDZ9-10 电压互感器

型号 Type	电压比 Voltage ratio(V)	额定绝缘水平 Rated insulation(kV)	准确级及额定输出 Accuracy class and Rated output(VA)	极限输出 Max. output(VA)
JDZ9-10	6000/100	7.2/30/60	0.2-40 0.5-100 1.0-200 3.0-500	500
	10000/100	12/42/75		
	10000/110	12/42/75		
	10000/220	12/42/75		
	6000/100, 100	7.2/30/60	0.2/0.2-20/20 0.5/0.5-30/30	
	10000/100, 100	12/42/75		

外形尺寸图
Overall dimensions

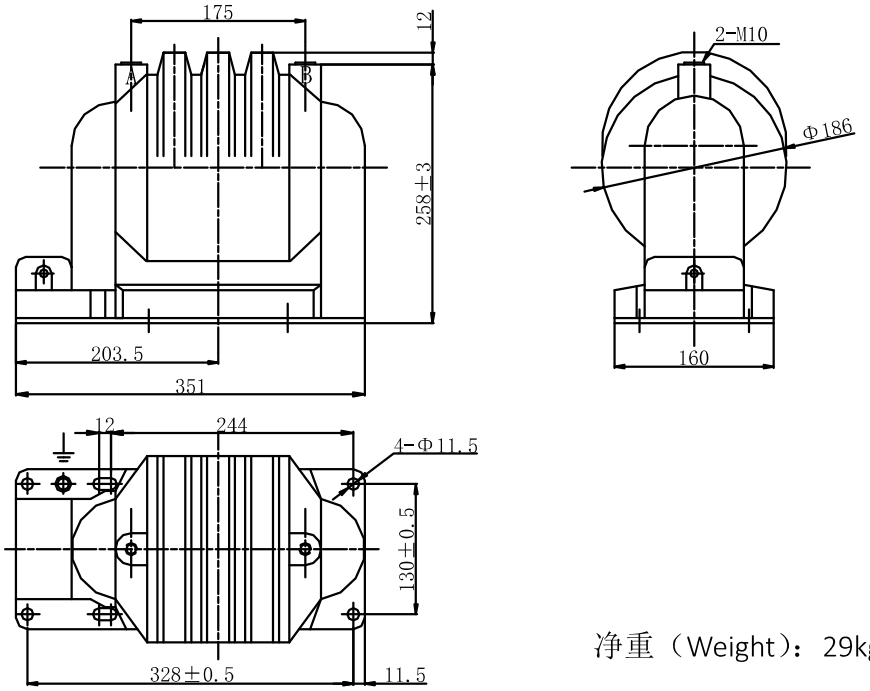

净重（Weight）：29kg

JDZ9-10 型电压互感器参见接线图 1-图 4
Type JDZ9-10 voltage transformer see figure1-figure4

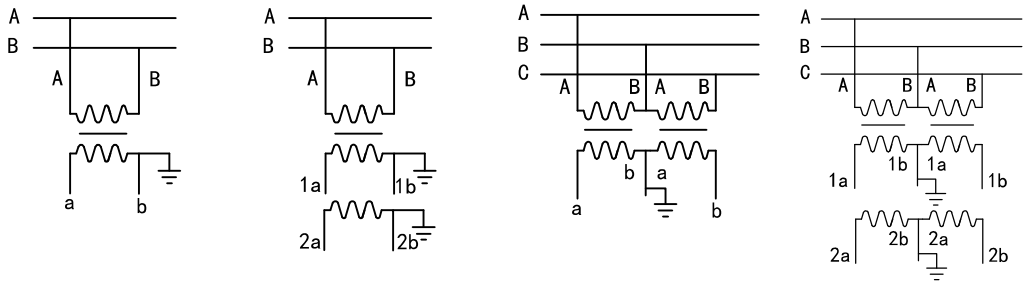

图一 Figure1　图二 Figure2　图三 Figure3　图四 Figure4

JDZ9-10R 电压互感器

电压比 Voltage ratio(V)	额定绝缘水平 Rated insulation(kV)	准确级及额定输出 Accuracy class and Rated output(VA)	极限输出 Max. output(VA)
6000/100	7.2/30/60	0.2-50 0.5-120 3.0-300	1000
10000/100	12/42/75		
6000/220	7.2/30/60	0.5-120 3.0-300	
10000/220	12/42/75		
10000/100,220	12/42/75	0.5/6P 50/1000	
		0.2/6P 20/1000	

外形尺寸图

Overall dimensions

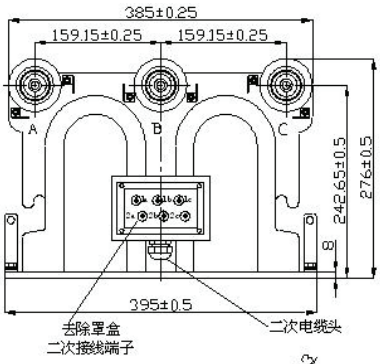

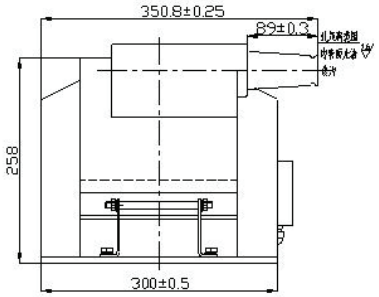

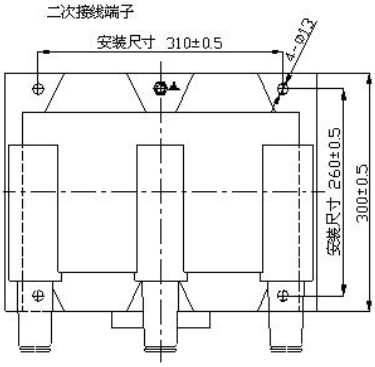

JDZ9-10R

净重(Weight)：49kg

JDZ9-10R 型电压互感器参见接线图 1,图 2

Type JDZ9-10R voltage transformer see figure1-figure2

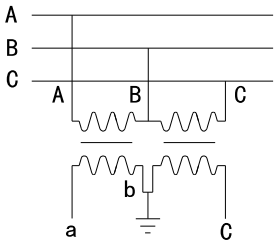

图 1

Figure1

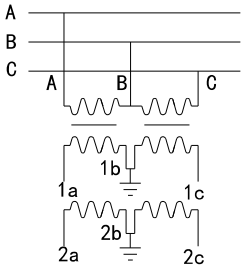

图 2

Figure2

JDZ10-10A, JDZ10-10B, JDZ10-10C 电压互感器

型号 Type	电压比 Voltage ratio(V)	额定绝缘水平 Rated insulation(kV)	准确级及额定输出 Accuracy class and Rated output(VA)	极限输出 Max. output(VA)
JDZ10-10A	3000/100	3.6/25/40	0.2—15 0.5—30 1.0—60	200
	6000/100	7.2/30/60		
	10000/100	12/42/75		
JDZ10-10B	3000/100	3.6/25/40	0.2—25 0.5—50 1.0—90	350
	6000/100	7.2/30/60		
	10000/100	12/42/75		
JDZ10-10C	3000/100	3.6/25/40	0.2—30 0.5—75 1.0—150 3.0—300	400
	3000/110	3.6/25/40		
	3300/100	3.6/25/40		
	6000/100	7.2/30/60		
	6300/100	7.2/30/60		
	6600/100	7.2/30/60		
	6600/110	7.2/30/60		
	10000/100	12/42/75		
	10500/100	12/42/75		
	11000/110	12/42/75		

外形尺寸图
Overall dimensions

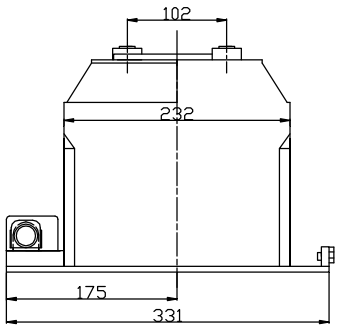

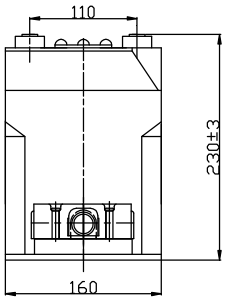

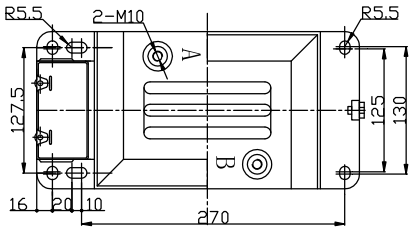

JDZ10-10A
JDZ10-10A
净重(Weight)：21kg

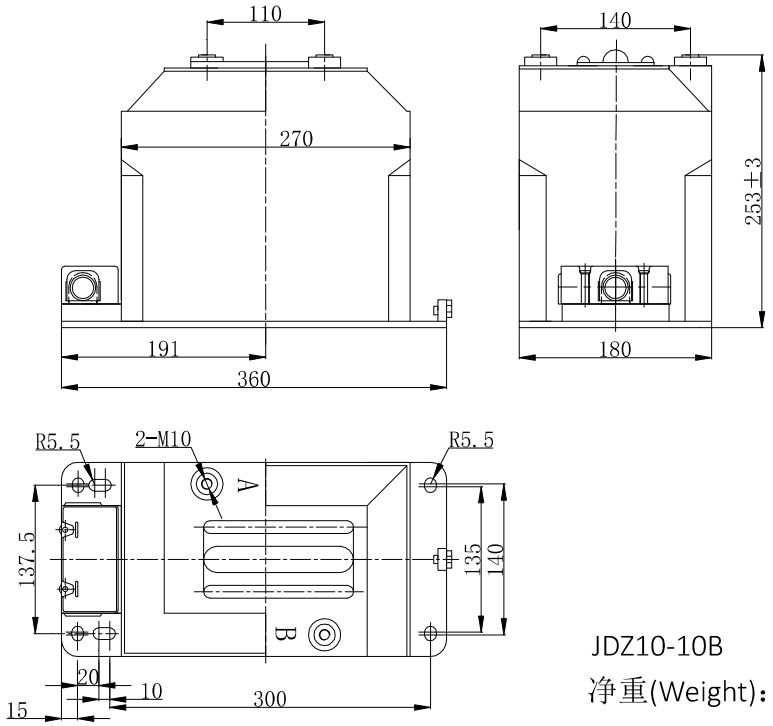

JDZ10-10B

净重(Weight)：31kg

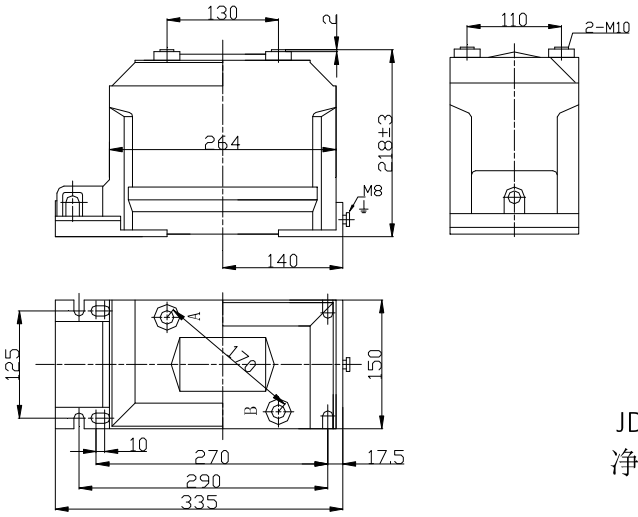

JDZ10-10C

净重(Weight)：21kg

JDZ10-10A; JDZ10-10B; JDZ10-10C 型电压互感器参见接线图 1-图 2

Type JDZ10-10A; JDZ10-10B; JDZ10-10C voltage transformation see figure1-figure_

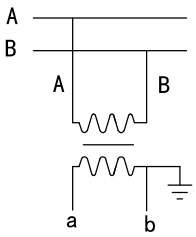

图 1

Figure1

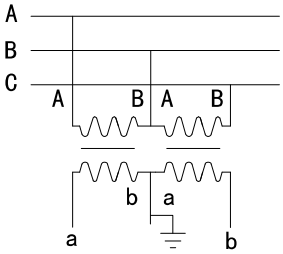

图 2

Figure2

JDZ11-10，JDZ11-10S 电压互感器

型号 Type	电压比 Voltage ratio(V)	额定绝缘水平 Rated insulation(kV)	准确级及额定输出 Accuracy class and Rated output(VA)	极限输出 Max. output(VA)
JDZ11-10	3000/100	3.6/25/40	0.2-40 0.5-100 1.0-200 3.0-500	600
	3000/110			
	3300/100			
	6000/100	7.2/30/60		
	6300/100			
	6600/100			
	6600/110			
	10000/100	12/42/75		
	10000/220			
	10500/100			
	11000/110			
JDZ11-10S	6000/230	7.2/30/60	0.2-50 0.5-150 1.0-300 3.0-750	1200
	6300/110	7.2/30/60		
	10000/100	12/42/75		
	10000/110	12/42/75		
	10000/220	12/42/75		
	10000/100, 100	12/42/75	0.2/0.2-30/30 0.2/0.5-30/30 0.5/0.5-60/60	600（注：有两个测量级时对应第一个测量级）
	10000/100, 110	12/42/75		
	10000/100, 220	12/42/75		

外形尺寸图
Overall dimensions

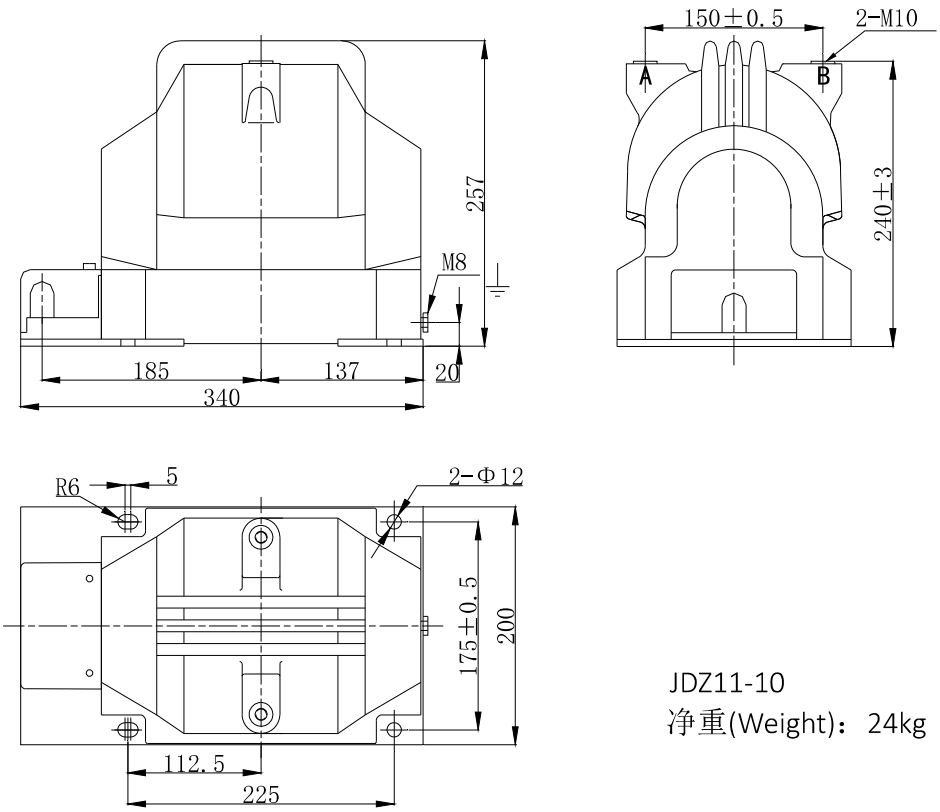

JDZ11-10
净重(Weight)：24kg

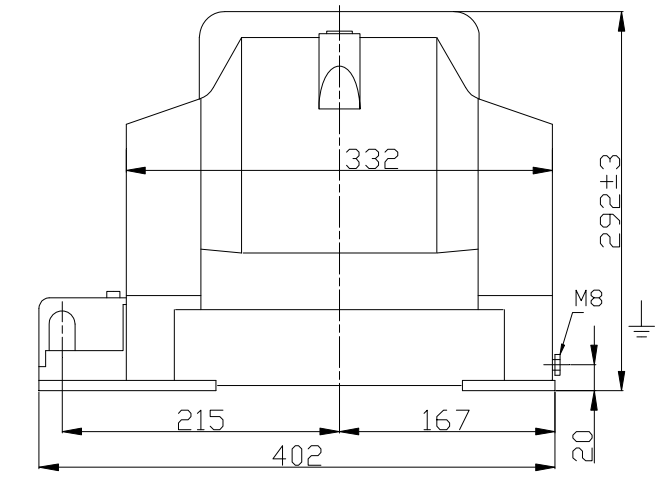

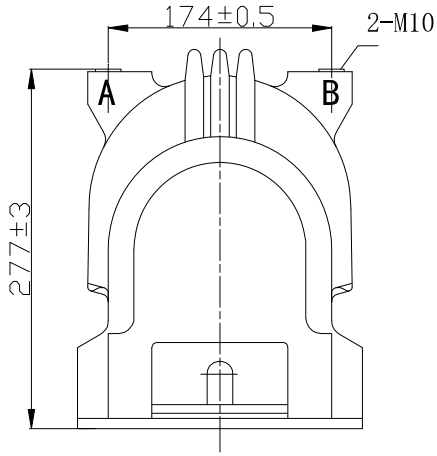

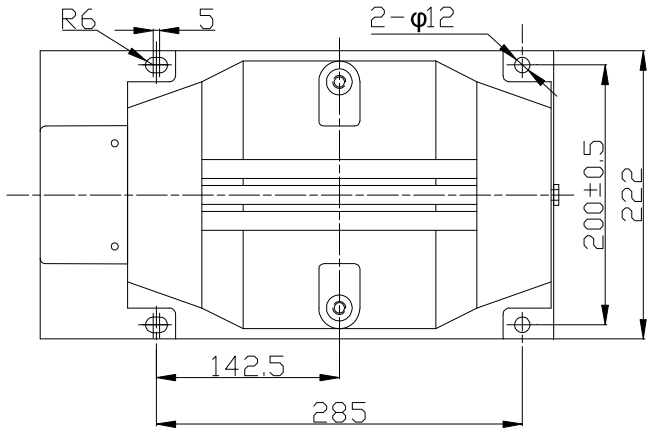

JDZ11-10S
净重(Weight)：45kg

JDZ11-10 型电压互感器参见接线图 1-图 2
JDZ11-10S 型电压互感器参见接线图 1-图 4
Type JDZ11-10 voltage transformer see figure1-figure2
JDZ11-10S voltage transformer see figure1-figure4

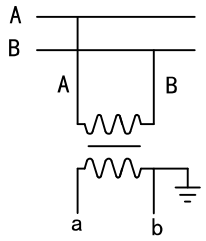

图 1
Figure1

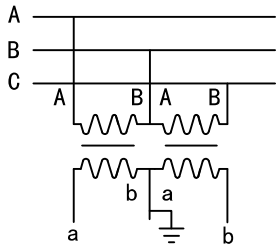

图 2
Figure2

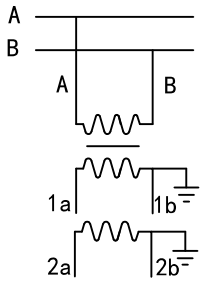

图 3
Figure3

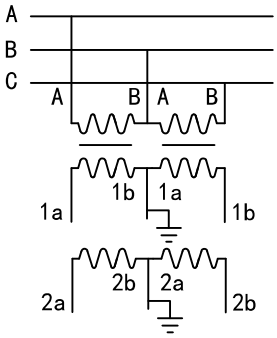

图 4
Figure4

JDZ11-10A 型电压互感器

型号 Type	额定电压比 Rated transformation ratio(V)	额定绝缘水平 Rated insulation(kV)	额定输出 Rated output(VA)	热极限输出 Thermal limiting output(VA)
JDZ11-10A	3000/100	3.6/25/40	0.2-50 0.5-100 1.0-200 3.0-500	2500
	3000/110	3.6/25/40		
	3300/100	3.6/25/40		
	6000/100	7.2/30/60		
	6300/100	7.2/30/60		
	6600/100	7.2/30/60		
	6600/110	7.2/30/60		
	10000/100	12/42/75		
	10000/220	12/42/75		
	10000/230	12/42/75		

外形尺寸图
Overall dimensions

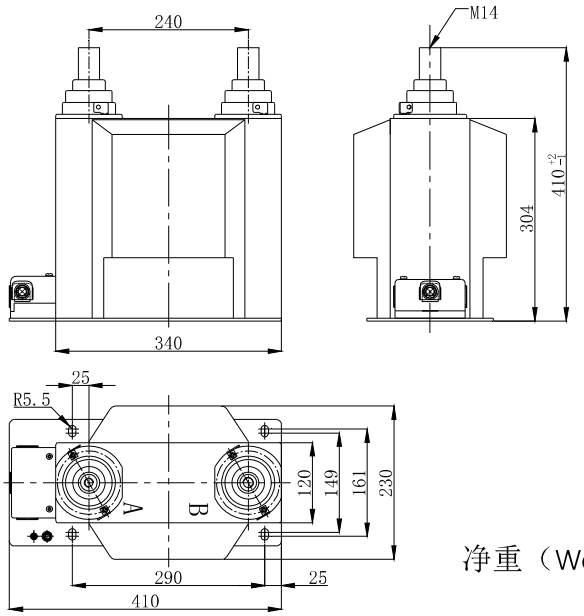

净重（Weight）：49kg

JDZ11-10A 型电压互感器参见接线图 1-图 2
JDZ11-10A voltage transformer see figure1-figure2

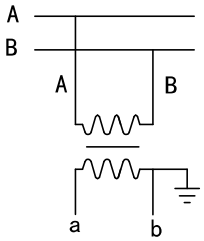

图 1
Figure1

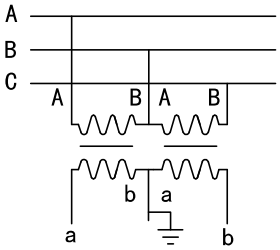

图 2
Figure2

JDZ11-10R 电压互感器

电压比 Voltage ratio(V)	额定绝缘水平 Rated insulation(kV)	准确级及额定输出 Accuracy class and Rated output(VA)	极限输出 Max. output(VA)
6000/100	7.2/30/60	0.2-50 0.5-120 3.0-300	1000
10000/100	12/42/75		
6000/220	7.2/30/60	0.5-120 3.0-300	
10000/220	12/42/75		
10000/100, 220	12/42/75	0.5/3P 50/1000 0.2/3P 20/1000	

外形尺寸图
Overall dimensions

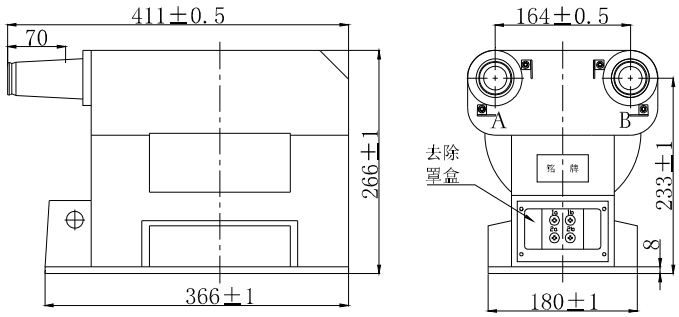

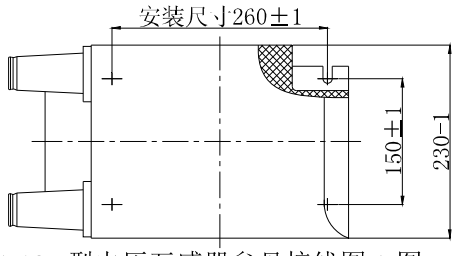

净重（Weight）：33.5kg

JDZ11-10R 型电压互感器参见接线图 1-图 4
Type JDZ11-10R voltage transformer see figure1-4

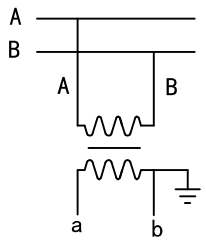

图 1
Figure1

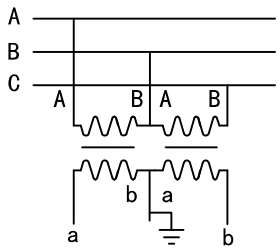

图 2
Figure2

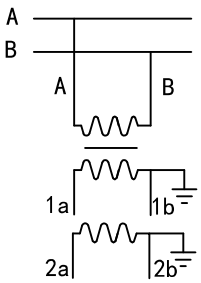

图 3
Figure3

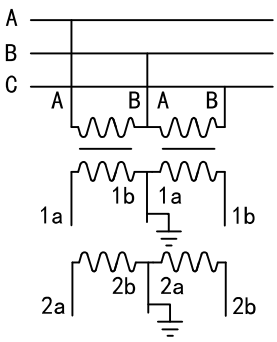

图 4
Figure4

JDZ12-10A 电压互感器

电压比 Voltage ratio(V)	额定绝缘水平 Rated insulation(kV)	准确级及额定输出 Accuracy class and Rated output(VA)	极限输出 Max. output(VA)
3000/100	3.6/25/40	0.2—15 0.5—40 1.0—80 3.0—200	350
3000/110	3.6/25/40		
3300/100	3.6/25/40		
6000/100	7.2/30/60		
6300/100	7.2/30/60		
6600/100	7.2/30/60		
6600/110	7.2/30/60		
10000/100	12/42/75		
10500/100	12/42/75		
11000/110	12/42/75		

外形尺寸图
Overall dimensions

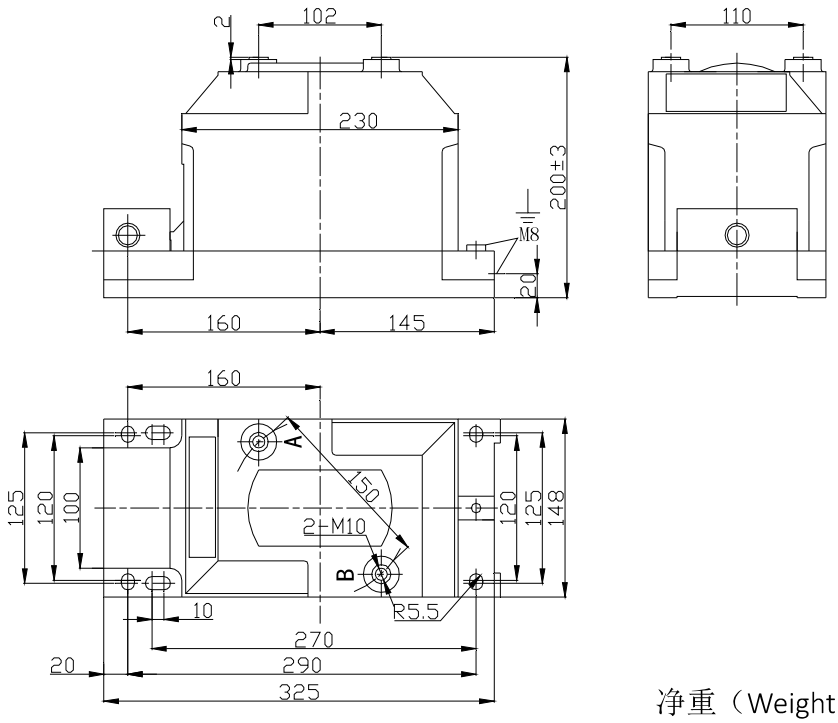

净重（Weight）：18.5kg

JDZ12-10A 型电压互感器参见接线图 1-图 2
Type JDZ12-10A voltage transformer see figure1-2

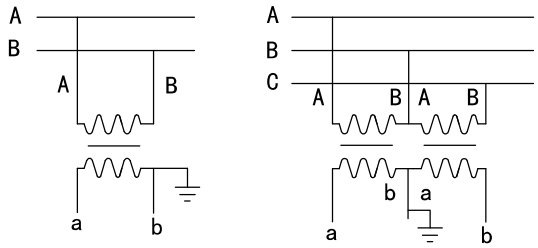

图 1
Figure1

图 2
Figure2

JDZ13-10A 电压互感器

型号 Type	电压比 Voltage ratio(V)	额定绝缘水平 Rated insulation(kV)	准确级及额定输出 Accuracy class and Rated output(VA)	极限输出 Max. output(VA)
JDZ13-10A	3000/100	3.6/25/40	0.2—15 0.5—30 1.0—60	200
	6000/100	7.2/30/60		
	10000/100	12/42/75		
	3000/110	3.6/25/40		
	3300/100	3.6/25/40		
	6000/100	7.2/30/60		
	6300/100	7.2/30/60		
	6600/100	7.2/30/60		
	6600/110	7.2/30/60		
	10000/100	12/42/75		
	10500/100	12/42/75		
	11000/110	12/42/75		

外形尺寸图
Overall dimensions

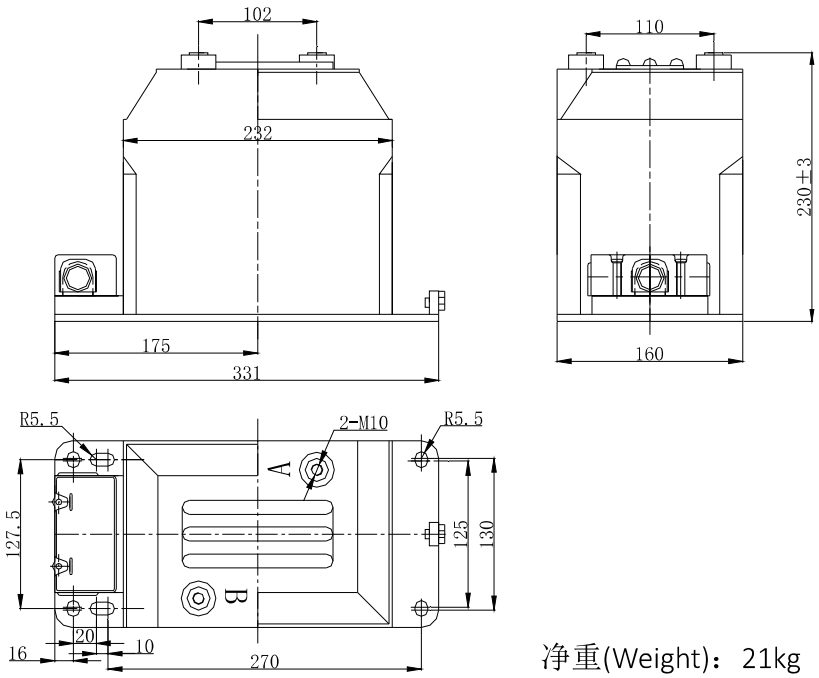

净重(Weight)：21kg

JDZ13-10A 型电压互感器参见接线图 1-图 2
Type JDZ13-10A voltage transformer see figure1-2

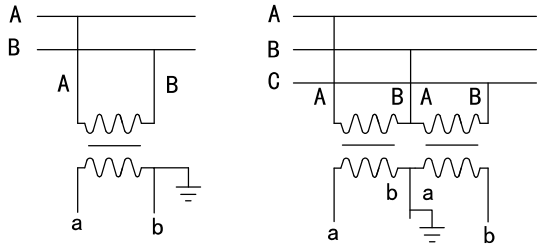

图 1
Figure1

图 2
Figure2

JDZ15-10(-N), JDZX15-10 组合式防谐振电压互感器

型号 Type	电压比 Voltage ratio(V)	额定绝缘水平 Rated insulation(kV)	准确级及额定输出 Accuracy class and Rated output(VA)	极限输出 Max. output(VA)
JDZ15-10	3000：√3/100：√3, 100:3	3.6/25/40	0.2/3P—15/50 0.2/6P—15/50 0.5/3P—30/50 0.5/6P—30/50 1.0/3P—60/50 1.0/6P—60/50	350
	3000：√3/110：√3, 110:3	3.6/25/40		
	3300：√3/100：√3, 100:3	3.6/25/40		
	6000：√3/100：√3, 100:3	7.2/30/60		
	6300：√3/100：√3, 100:3	7.2/30/60		
	6600：√3/100：√3, 100:3	7.2/30/60		
	6600：√3/110：√3, 110:3	7.2/30/60		
	10000：√3/100：√3, 100:3	12/42/75		
	10500：√3/100：√3, 100:3	12/42/75		
	11000：√3/110：√3, 110:3	12/42/75		
JDZ15-10-N	3000：√3/100：√3, 100:3	3.6/25/40	0.2/3P—15/50 0.2/6P—15/50 0.5/3P—30/50 0.5/6P—30/50 1.0/3P—60/50 1.0/6P—60/50	350
	3000：√3/110：√3, 110:3	3.6/25/40		
	3300：√3/100：√3, 100:3	3.6/25/40		
	6000：√3/100：√3, 100:3	7.2/30/60		
	6300：√3/100：√3, 100:3	7.2/30/60		
	6600：√3/100：√3, 100:3	7.2/30/60		
	6600：√3/110：√3, 110:3	7.2/30/60		
	10000：√3/100：√3, 100:3	12/42/75		
	10500：√3/100：√3, 100:3	12/42/75		
	11000：√3/110：√3, 110:3	12/42/75		

JDZX15-10 型电压互感器 voltage transformers

电压比 Voltage ratio(V)	额定绝缘水平 Rated insulation(kV)	准确级及额定输出 Accuracy class and Rated output(VA)	极限输出 Max. output(VA)
3000：√3/100：√3, 100	3.6/25/40	0.2/3P—15/50 0.2/6P—15/50 0.5/3P—30/50 0.5/6P—30/50 1.0/3P—60/50 1.0/6P—60/50	350
3000：√3/110：√3, 110	3.6/25/40		
3300：√3/100：√3, 100	3.6/25/40		
6000：√3/100：√3, 100	7.2/30/60		
6300：√3/100：√3, 100	7.2/30/60		
6600：√3/100：√3, 100	7.2/30/60		
6600：√3/110：√3, 110	7.2/30/60		
10000：√3/100：√3, 100	12/42/75		
10500：√3/100：√3, 100	12/42/75		
11000：√3/110：√3, 110	12/42/75		

外形尺寸图
Overall dimensions

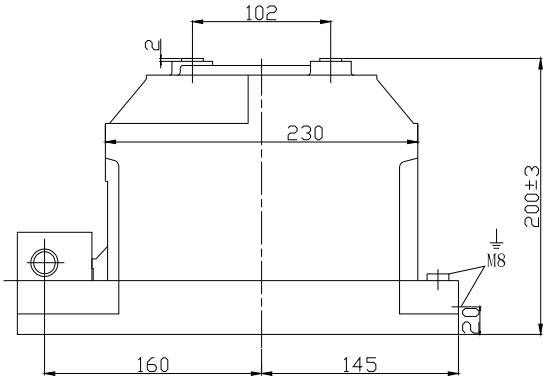

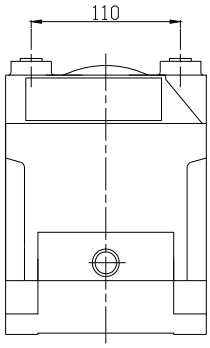

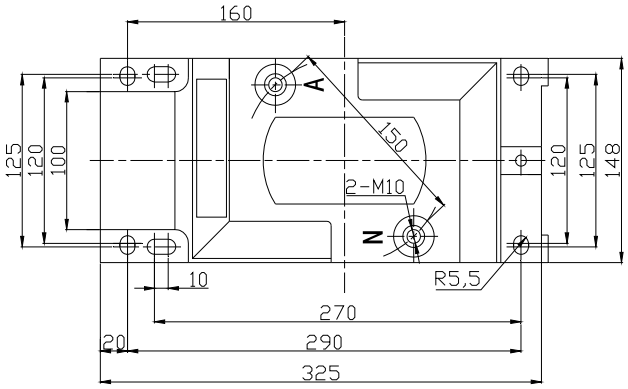

JDZ15-10
净重(Weight)：18.5kg

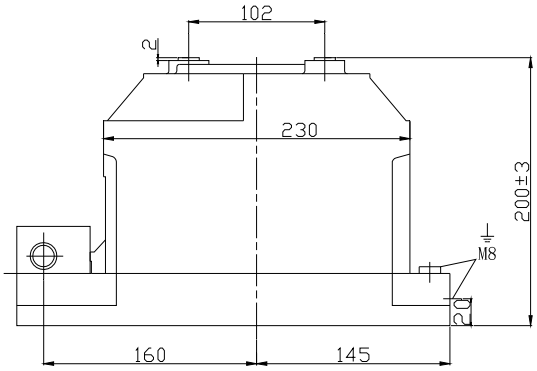

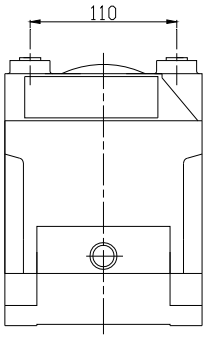

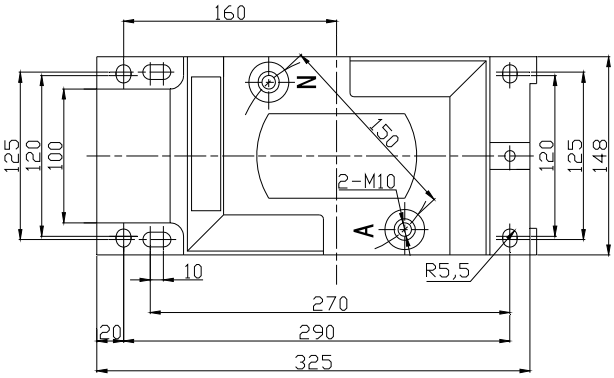

JDZ15-10-N
净重(Weight)：18.5kg

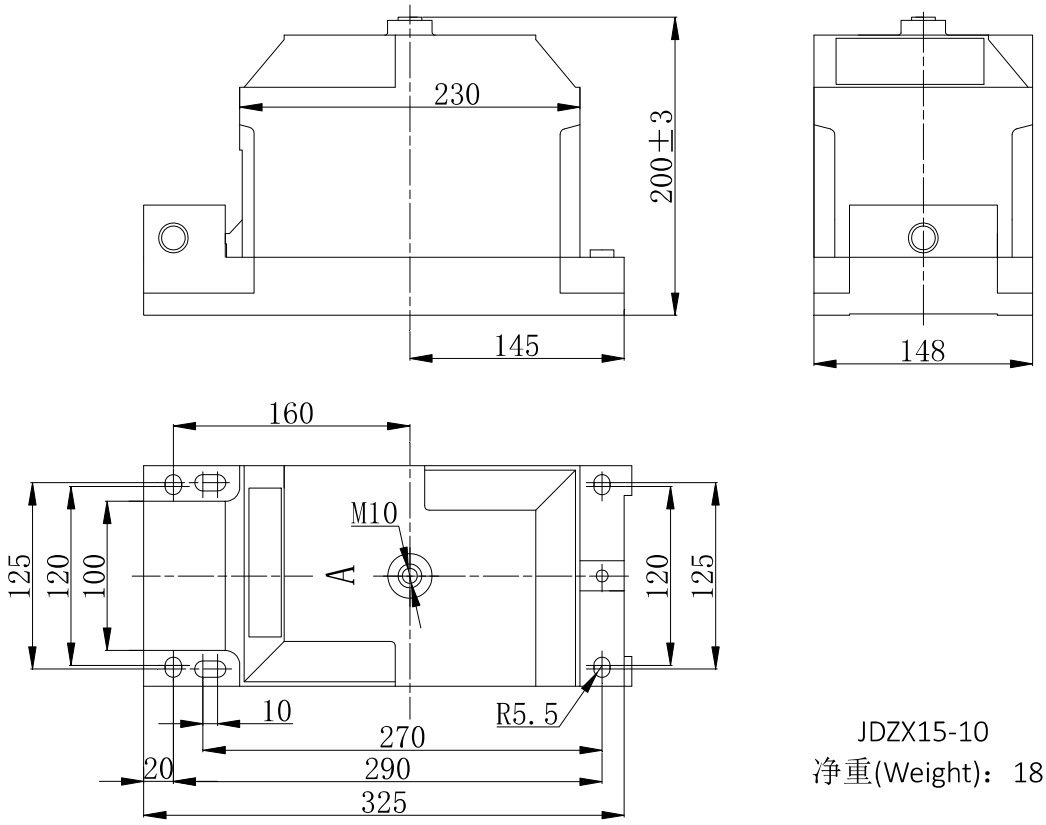

JDZX15-10
净重(Weight)：18.5kg

JDZ15-10(-N)、JDZX15-10 型电压互感器参见接线图 1
Type JDZ15-10(-N)、JDZX15-10 voltage transformer see figure 1

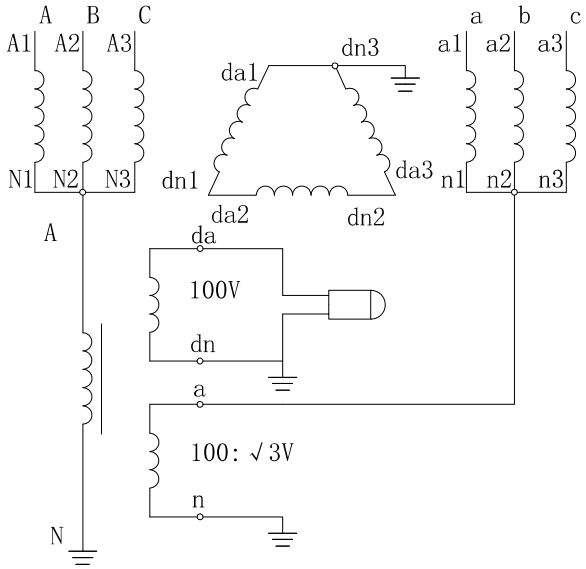

图 1
Figure 1

JDZ16-10(-N)，JDZX15-10 型组合式防谐振电压互感器

型号 Type	电压比 Voltage ratio(V)	额定绝缘水平 Rated insulation(kV)	准确级及额定输出 Accuracy class and Rated output(VA)	极限输出 Max. output(VA)
JDZ16-10	3000：√3/100：√3, 100:3	3.6/25/40	0.2/3P—20/50 0.2/6P—20/50 0.5/3P—60/50 0.5/6P—60/50 1.0/3P—150/50 1.0/6P—150/50	400
	3000：√3/110：√3, 110:3	3.6/25/40		
	3300：√3/100：√3, 100:3	7.2/30/60		
	6000：√3/100：√3, 100:3	7.2/30/60		
	6300：√3/100：√3, 100:3	7.2/30/60		
	6600：√3/100：√3, 100:3	7.2/30/60		
	6600：√3/110：√3, 110:3	7.2/30/60		
	10000：√3/100：√3, 100:3	12/42/75		
	10500：√3/100：√3, 100:3	12/42/75		
	11000：√3/110：√3, 110:3	12/42/75		
JDZ16-10-N	3000：√3/100：√3, 100:3	3.6/25/40	0.2/3P—20/50 0.2/6P—20/50 0.5/3P—60/50 0.5/6P—60/50 1.0/3P—150/50 1.0/6P—150/50	400
	3000：√3/110：√3, 110:3	3.6/25/40		
	3300：√3/100：√3, 100:3	7.2/30/60		
	6000：√3/100：√3, 100:3	7.2/30/60		
	6300：√3/100：√3, 100:3	7.2/30/60		
	6600：√3/100：√3, 100:3	7.2/30/60		
	6600：√3/110：√3, 110:3	7.2/30/60		
	10000：√3/100：√3, 100:3	12/42/75		
	10500：√3/100：√3, 100:3	12/42/75		
	11000：√3/110：√3, 110:3	12/42/75		

JDZX15-10 型电压互感器

电压比 Voltage ratio(V)	额定绝缘水平 Rated insulation(kV)	准确级及额定输出 Accuracy class and Rated output(VA)	极限输出 Max. output(VA)
3000：√3/100：√3, 100	3.6/25/40	0.2/3P—15/50 0.2/6P—15/50 0.5/3P—30/50 0.5/6P—30/50 1.0/3P—60/50 1.0/6P—60/50	350
3000：√3/110：√3, 110	3.6/25/40		
3300：√3/100：√3, 100	3.6/25/40		
6000：√3/100：√3, 100	7.2/30/60		
6300：√3/100：√3, 100	7.2/30/60		
6600：√3/100：√3, 100	7.2/30/60		
6600：√3/110：√3, 110	7.2/30/60		
10000：√3/100：√3, 100	12/42/75		
10500：√3/100：√3, 100	12/42/75		
11000：√3/110：√3, 110	12/42/75		

外形尺寸图
Overall dimensions

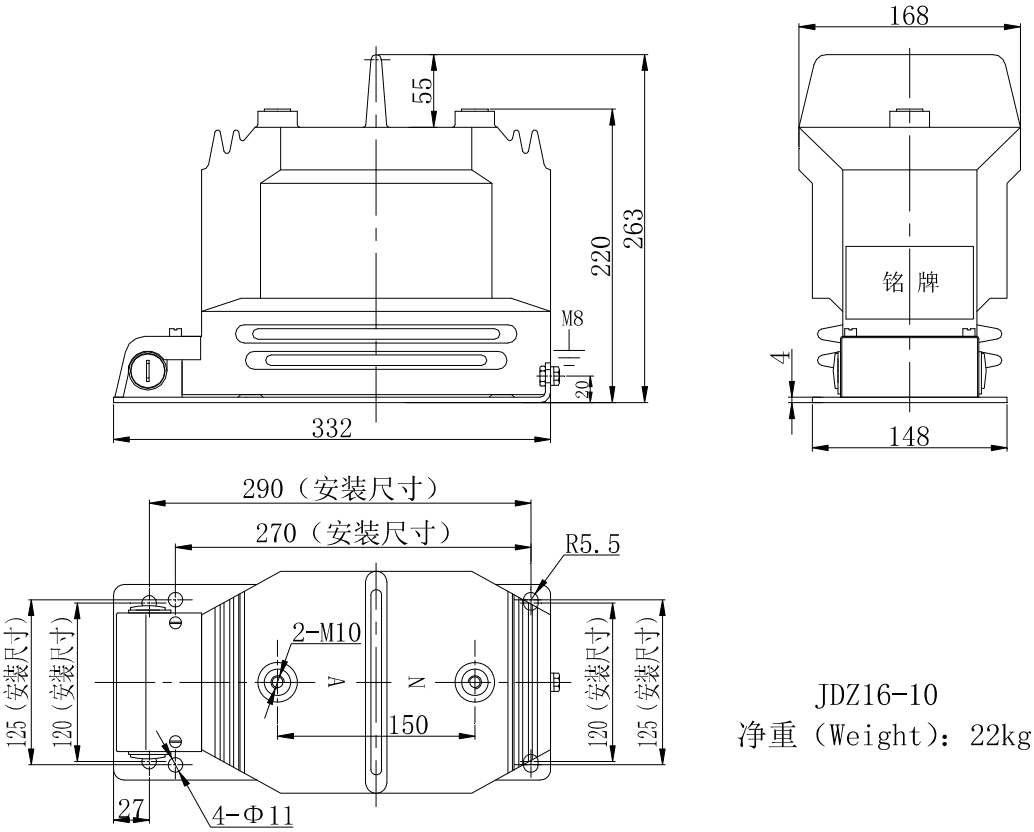

JDZ16-10
净重（Weight）：22kg

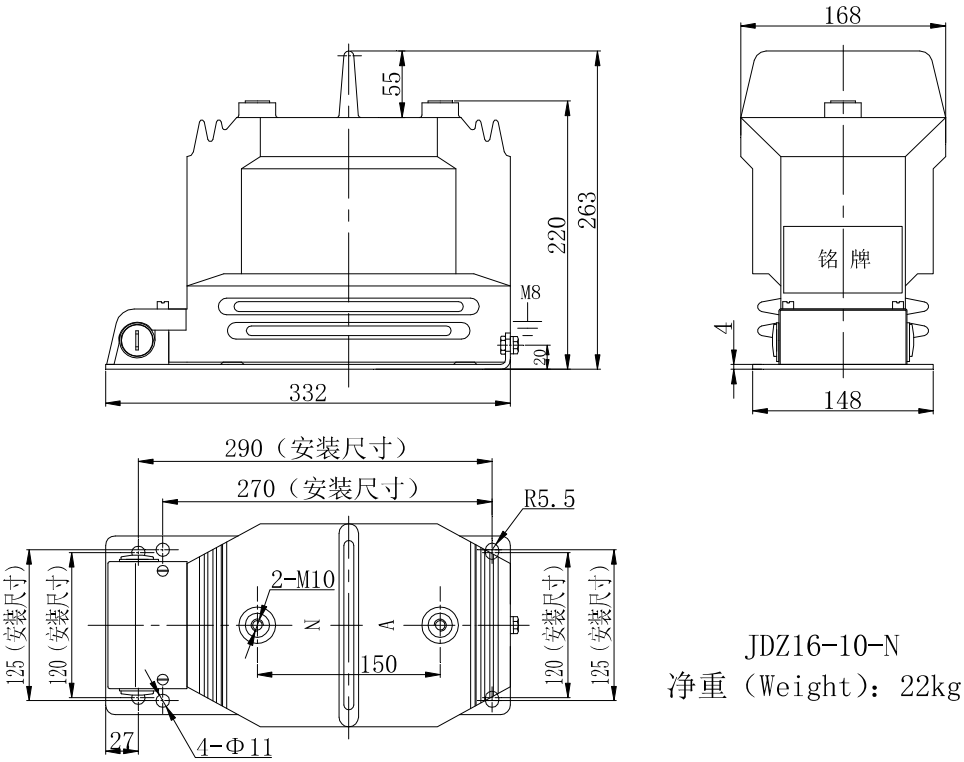

JDZ16-10-N
净重（Weight）：22kg

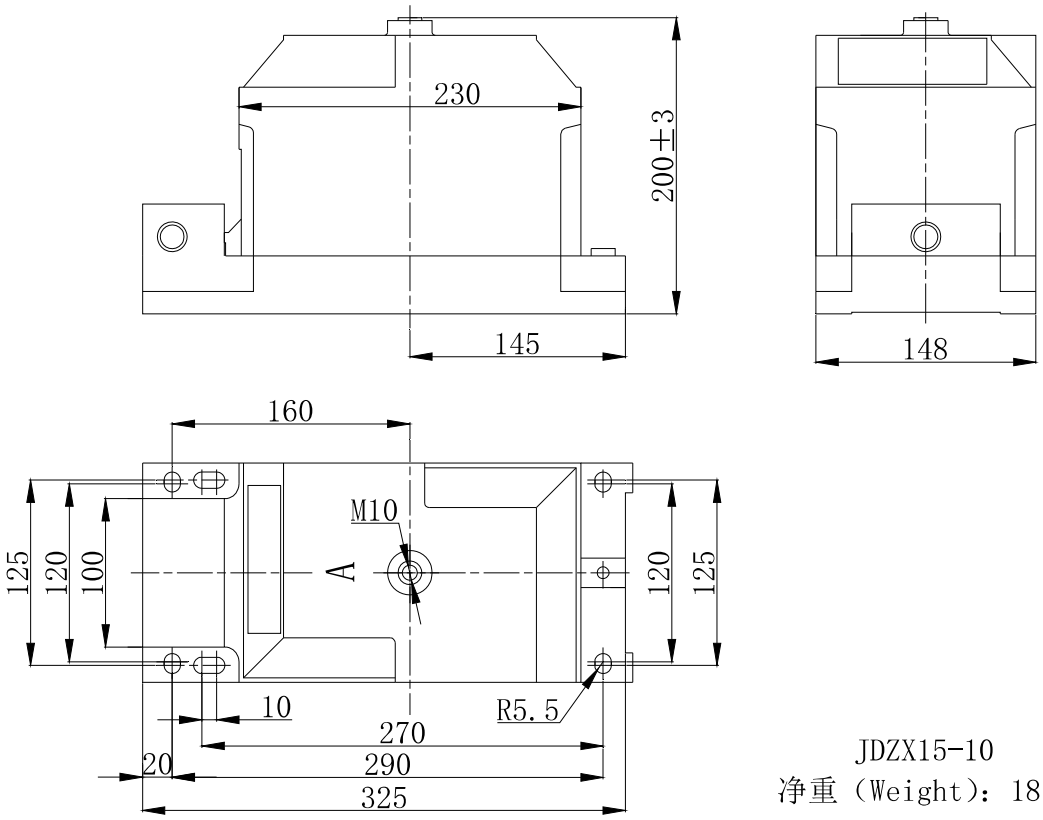

JDZX15-10
净重（Weight）：18.5kg

JDZ16-10(-N)、JDZX15-10 型电压互感器参见接线图 1
Type JDZ16-10(-N)、JDZX15-10 voltage transformer see figure 1

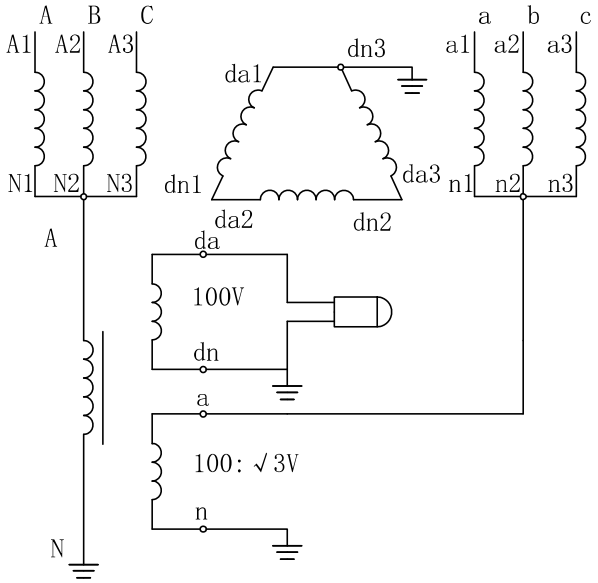

图 1
Figure 1

JDZ16-10 电压互感器

型号 Type	电压比 Voltage ratio(V)	额定绝缘水平 Rated insulation(kV)	准确级及额定输出 Accuracy class and Rated output(VA)	极限输出 Max. output(VA)
JDZ16-10	3000：√3/100：√3, 100:3	3.6/25/40	0.2/3P—20/50 0.2/6P—20/50 0.5/3P—60/50 0.5/6P—60/50 1.0/3P—150/50 1.0/6P—150/50	400
	3000：√3/110：√3, 110:3	3.6/25/40		
	3300：√3/100：√3, 100:3	7.2/30/60		
	6000：√3/100：√3, 100:3	7.2/30/60		
	6300：√3/100：√3, 100:3	7.2/30/60		
	6600：√3/100：√3, 100:3	7.2/30/60		
	6600：√3/110：√3, 110:3	7.2/30/60		
	10000：√3/100：√3, 100:3	12/42/75		
	10500：√3/100：√3, 100:3	12/42/75		
	11000：√3/110：√3, 110:3	12/42/75		

外形尺寸图
Overall dimensions

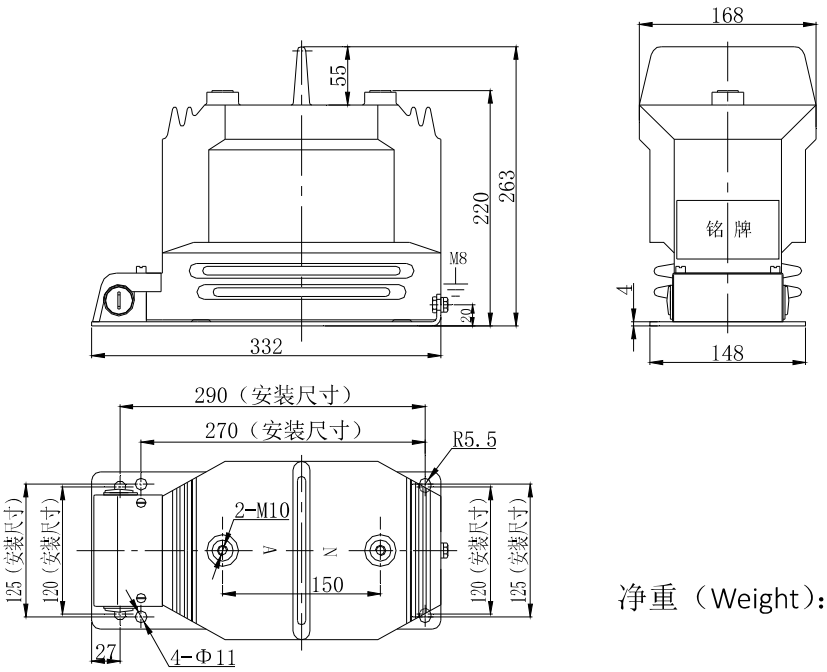

净重（Weight）：22kg

JDZ16-10 型电压互感器参见接线图 1　　Type JDZ16-10 voltage transformer see figure1

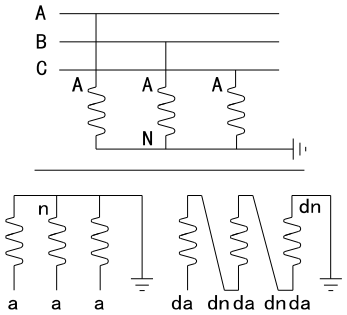

图 1

Figure1

JDZ18-10 电压互感器

电压比 Voltage ratio(V)	额定绝缘水平 Rated insulation(kV)	准确级及额定输出 Accuracy class and Rated output(VA)	极限输出 Max. output(VA)
6000：√3/100：√3, 100：√3, 100:3	7.2/30/60	0.2/0.5/3P—15/20/100 0.2/0.5/6P—15/20/100	500 （注：当有两个测量级时对应第一个测量级）
10000：√3/100：√3, 100：√3, 100:3	12/42/75		
6000： √3/100： √3， 100:3	7.2/30/60	0.2/3P—30/100 0.2/6P—30/100 0.5/3P—90/100 0.5/6P—90/100	
10000： √3/100： √3， 100:3	12/42/75		

外形尺寸图
Overall dimensions

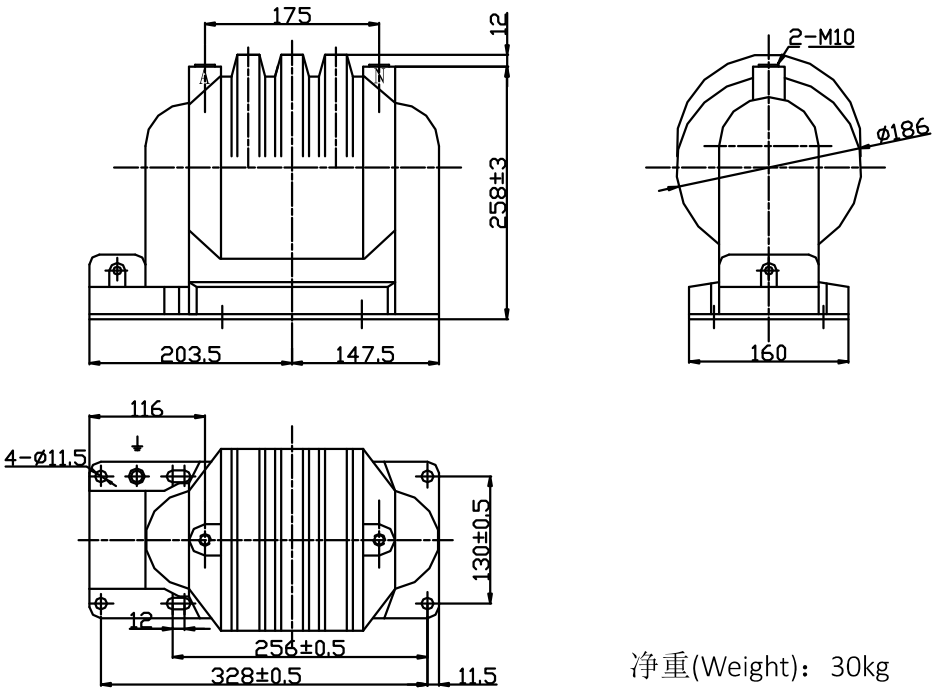

净重(Weight)：30kg

JDZ18-10 型电压互感器参见接线图 1-图 2
Type JDZ18-10 voltage transformer see figure1- figure 2

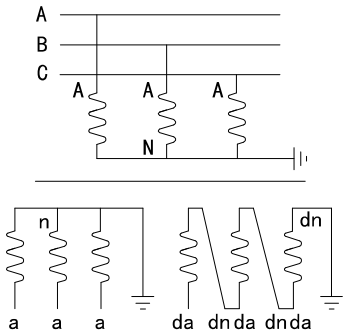

图 1
Figure1

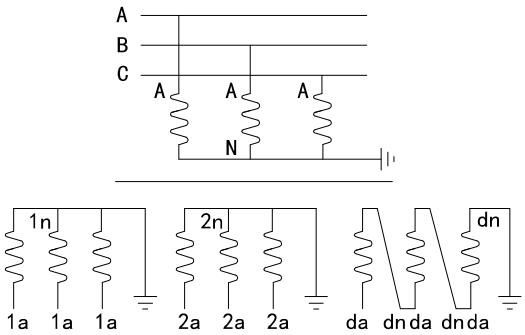

图 2
Figure2

JDZ19-10 型电压互感器

	电压比 Voltage ratio(V)	额定绝缘水平 Rated insulation(kV)	准确级及额定输出 Accuracy class and Rated output(VA)	极限输出 Max. output(VA)
JDZ19-10	6000：√3/100：√3, 100:3	7.2/30/60	0.2/3P-50/100 0.5/3P-100/100 1.0/3P-200/100 3.0/3P-400/100	600 （注：当有两个测量级时对应第一个测量级）
	10000：√3/100：√3, 100:3	12/42/75		
	6000：√3/100：√3, 100：√3, 100:3	7.2/30/60	0.2/0.5/3P—40/40/100	
	10000：√3/100：√3, 100：√3, 100:3	12/42/75		

外形尺寸图
Overall dimensions

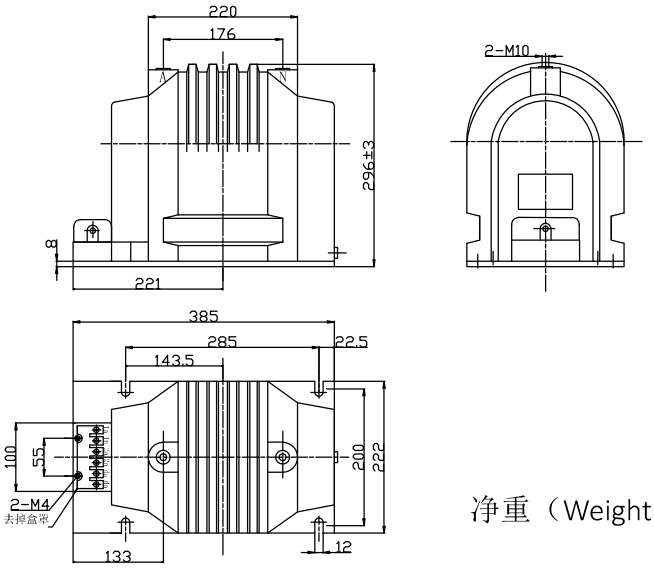

净重（Weight）：51kg

JDZ19-10 型电压互感器参见接线图 1-2
Type JDZ19-10 voltage transformer see figure1-2

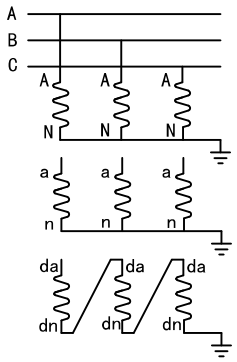

图 1
figure1

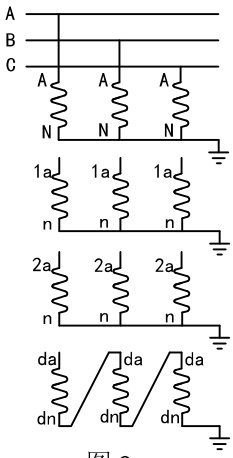

图 2
figure2

JDZ21-10 型电压互感器

电压比 Voltage ratio(V)	额定绝缘水平 Rated insulation(kV)	准确级及额定输出 Accuracy class and Rated output(VA)	极限输出 Max. output(VA)
10000：√3/100：√3, 100：√3, 100:3	12/42/75	0.2/0.5/3P—30/50/100 0.5/0.5/3P—50/50/100	1000 (注:有两个测量级时对应第一个测量级)

外形尺寸图
Overall dimensions

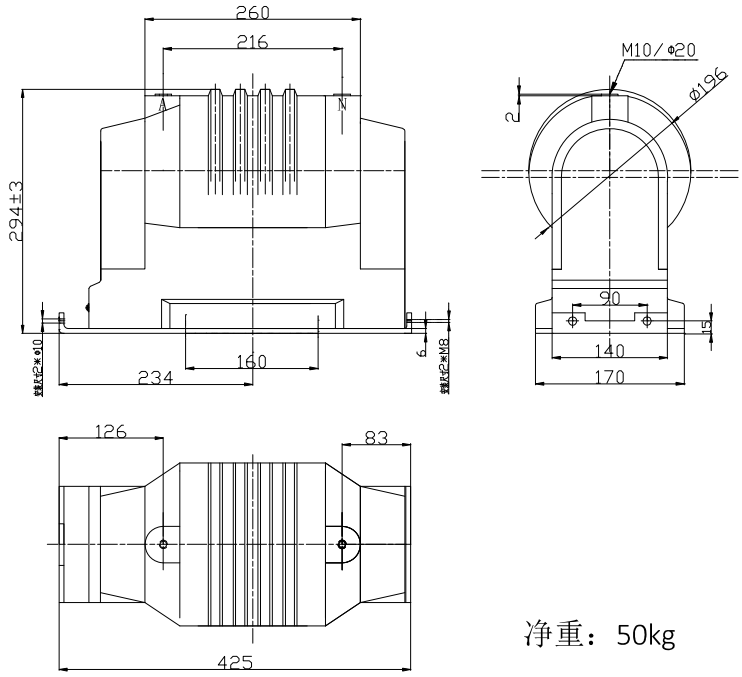

净重：50kg

JDZ21-10 型电压互感器参见接线图 1
Type JDZ21-10 voltage transformer see figure1

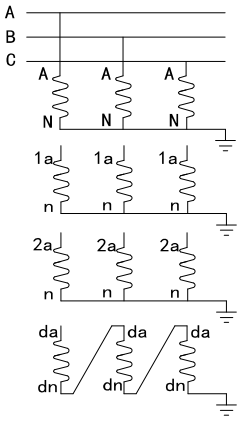

图 1
Figure1

JDZ22-10 型电压互感器

电压比 Voltage ratio(V)	额定绝缘水平 Rated insulation(kV)	准确级及额定输出 Accuracy class and Rated output(VA)	极限输出 Max. output(VA)
10000：√3/100：√3, 100：√3, 100:3	12/42/75	0.2/0.5/3P(6P)—50/50/100 0.5/0.5/3P(6P)—80/80/100	1200 （注：当有两个测量级时，对应第一个测量级）
10000：√3/100：√3, 100：√3, 100：√3, 100:3	12/42/75	0.2/0.5/0.5/3P(6P)-20/20/20/100	

外形尺寸图
Overall dimensions

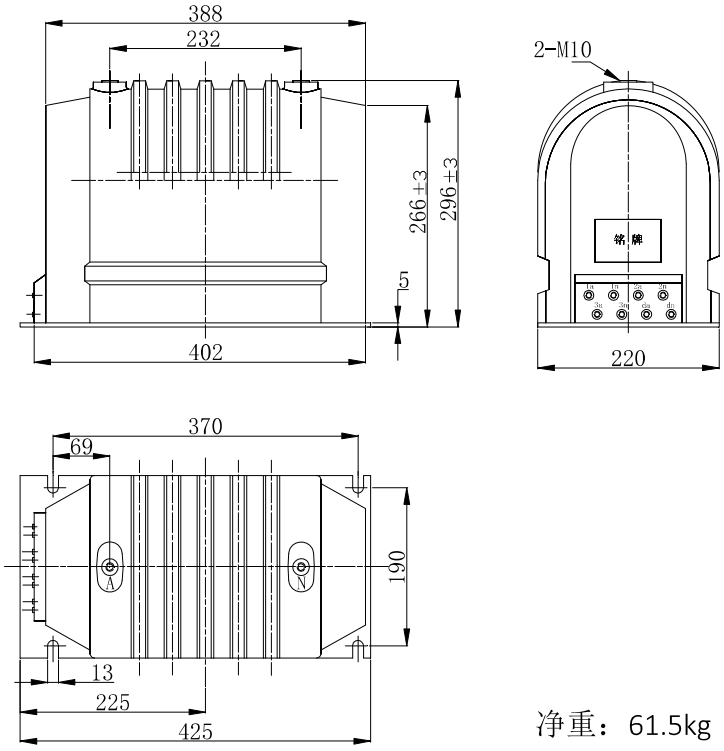

净重：61.5kg

JDZ22-10 型电压互感器参见接线图 1
Type JDZ22-10 voltage transformer see figure1

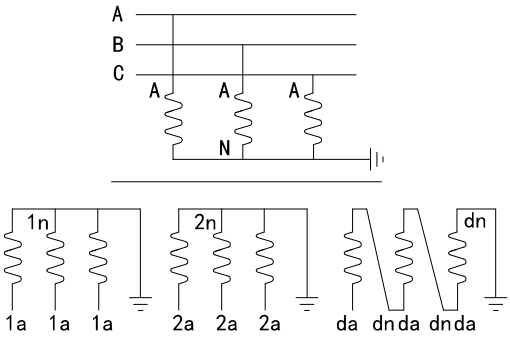

图 1
Figure1

JDZ24-10 ，JDZ24-10N 型电压互感器

型号 Type	电压比 Voltage ratio(V)	额定绝缘水平 Rated insulation(kV)	准确级及额定输出 Accuracy class and Rated output(VA)	极限输出 Max. output(VA)
JDZ24-10	10000：√3/100：√3, 100：√3, 100:3	12/42/75	0.2/0.5/3P(6P)—20/30/100 0.5/3P(6P)—100/100 0.2/3P(6P)—30/100	500 (注:有两个测量级时对应第一个测量级)
JDZ24-10N	10000：√3/100：√3, 100：√3, 100:3	12/42/75	0.2/0.5/3P(6P)—20/30/100 0.5/3P(6P)—100/100 0.2/3P(6P)—30/100	

外形尺寸图
Overall dimensions

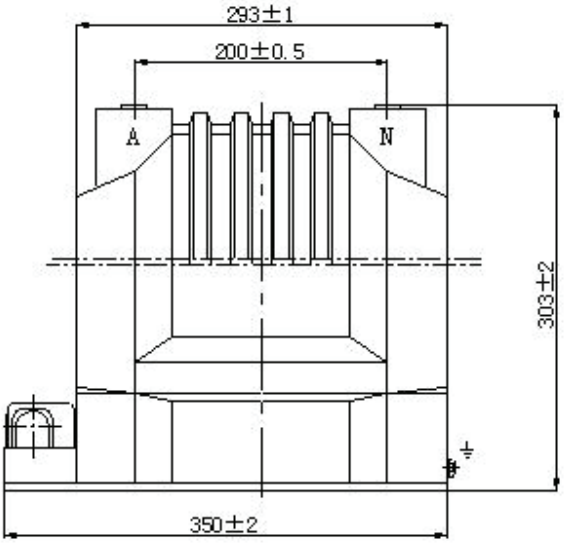

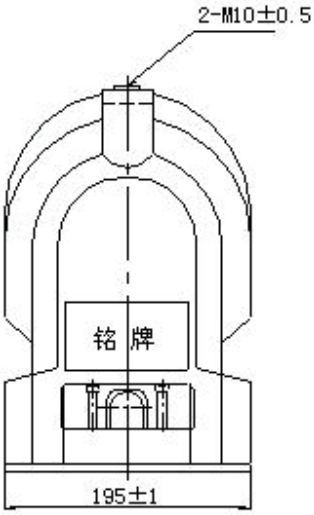

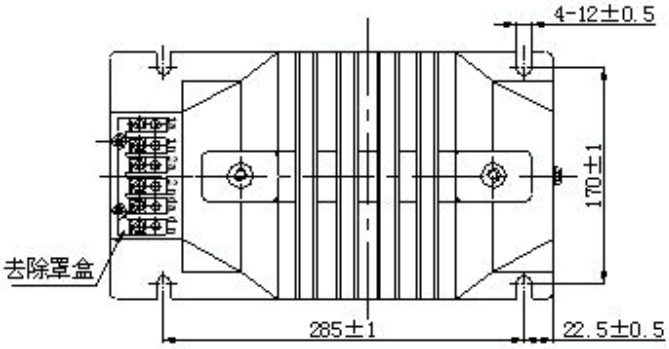

JDZ24-10
净重（Weight）：53kg

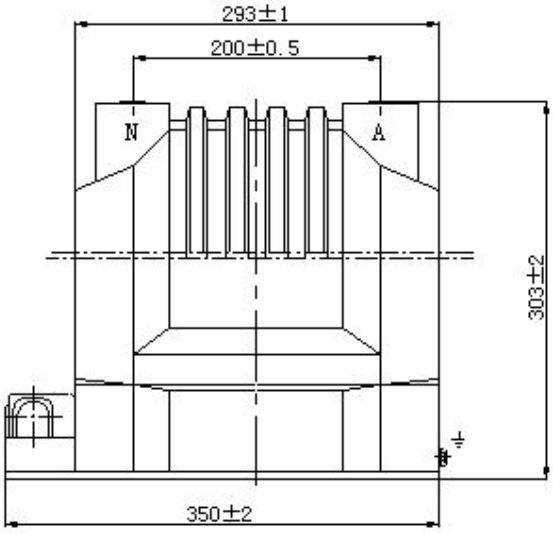

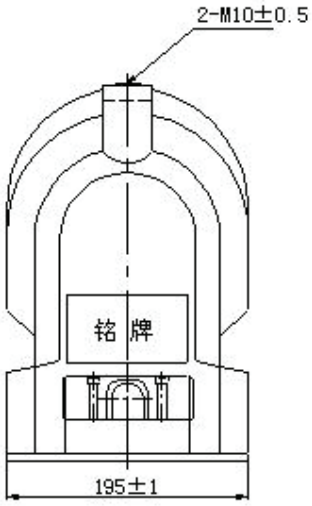

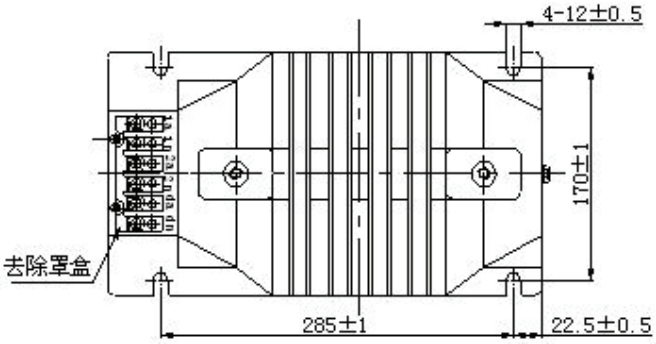

JDZ24-10-N
净重（Weight）：53kg

JDZ24-10、JDZ24-10N 型电压互感器参见接线图 1-图 2
Type JDZ24-10、JDZ24-10N voltage transformer see figure1-2

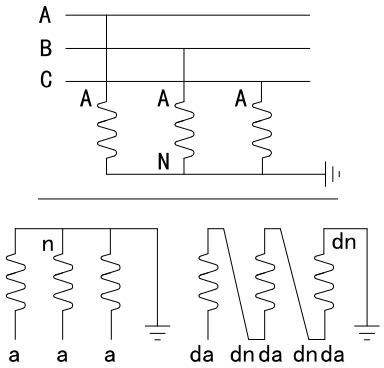

图 1
Figure 1

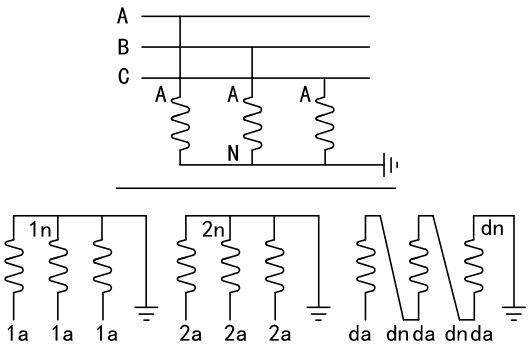

图 2
Figure 2

JDZ25-10　电压互感器

电压比 Voltage ratio(V)	额定绝缘水平 Rated insulation(kV)	准确级及额定输出 Accuracy class and Rated output(VA)	极限输出 Max. output(VA)
6000：√3/100：√3，100:3	7.2/30/60	0.2/6P(3P)—15/50 0.5/6P(3P)—30/50 1.0/6P(3P)—60/50	400
10000：√3/100：√3，100:3	12/42/75		

外形尺寸图
Overall dimensions

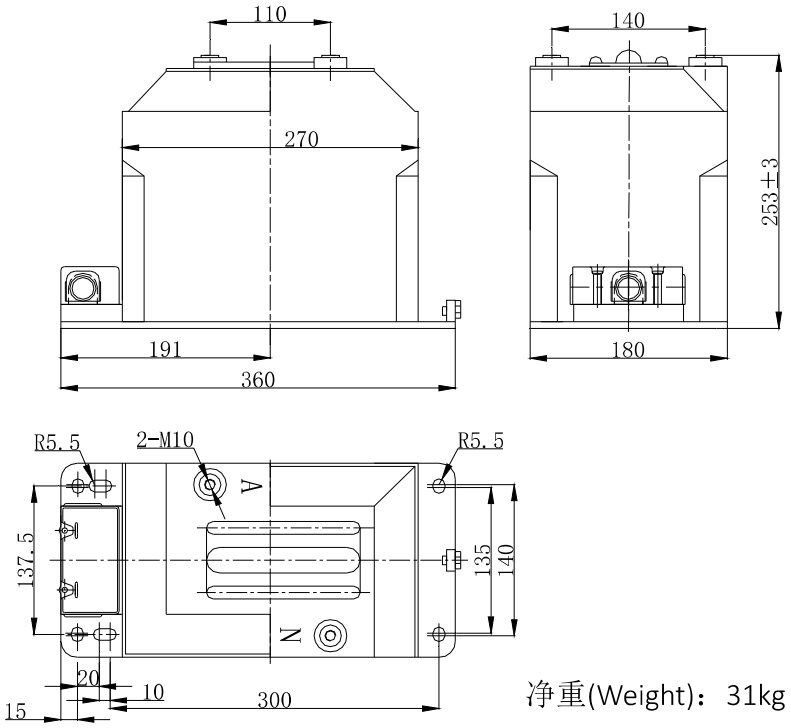

净重(Weight)：31kg

JDZ25-10 型电压互感器参见接线图 1
Type JDZ25-10 voltage transformation see figure1

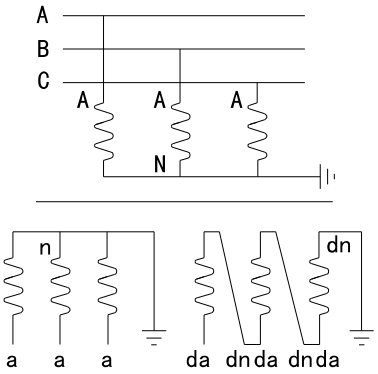

图 1
Figure1

JDZ26-10 电压互感器

电压比 Voltage ratio(V)	额定绝缘水平 Rated insulation(kV)	准确级及额定输出 Accuracy class and Rated output(VA)
10000/220	12/42/75	3.0/3000
10000/100, 220		0.5/3.0 50/3000

外形尺寸图
Overall dimensions

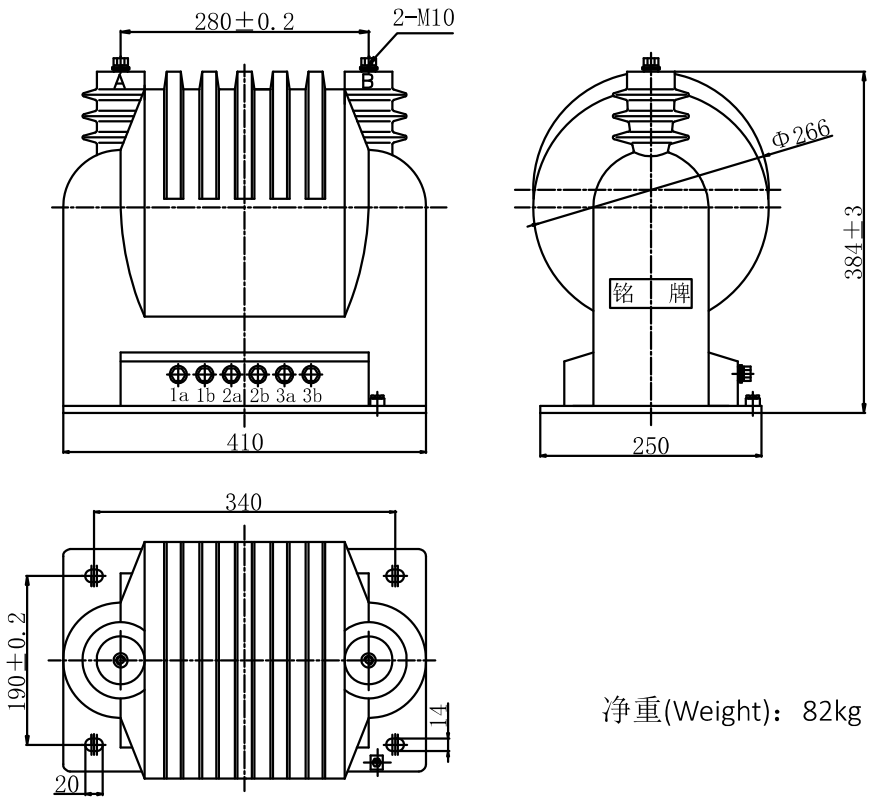

净重(Weight)：82kg

JDZ26-10 型电压互感器参见接线图 1
Type JDZ26-10 voltage transformer see figure1

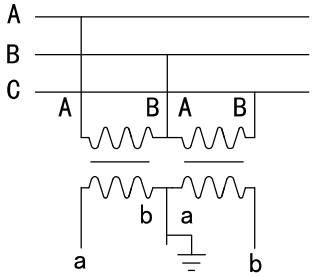

图 1
Figure1

JDZ-6, 10(Q)电压互感器

型号 Type	电压比 Voltage ratio(V)	准确级及额定输出 cos φ =0. 8 Accuracy class and Rated output(VA)				极限输出 Max. output(VA)
		0. 2	0. 5	1	3	
JDZ-6(Q)	6000/100	15	30	80	200	400
JDZ-10(Q)	10000/110	30	80	120	300	500

外形尺寸图
Overall dimensions

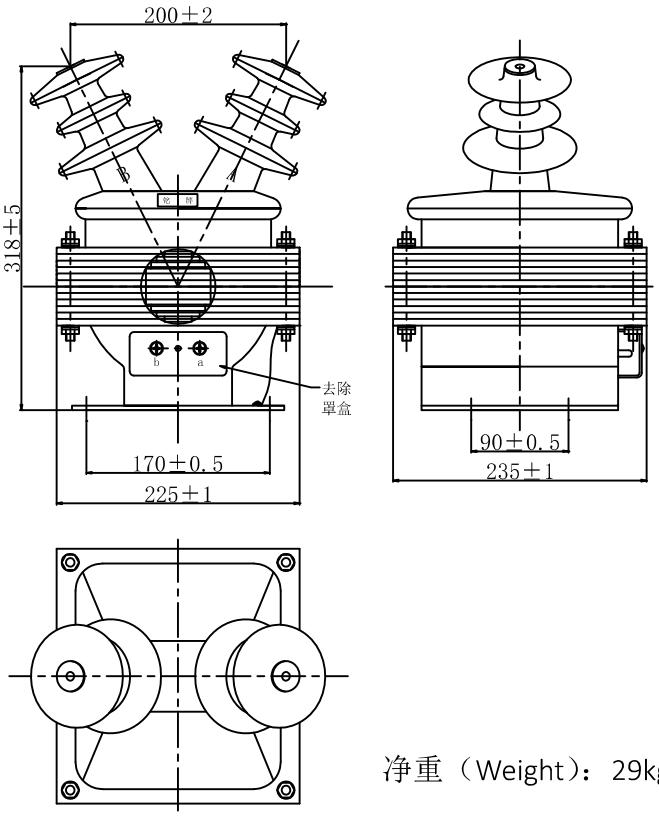

净重（Weight）：29kg

JDZ-6,10(Q)型电压互感器参见接线图 1-图 2
Type JDZ-6,10(Q) voltage transformer see figure1-figure2

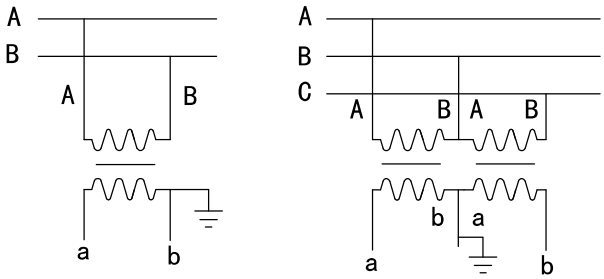

图 1
Figure1

图 2
Figure2

JDZJ8-10、JDZJ8-10R 电压互感器

型号 Type	电压比 Voltage ratio(V)	额定绝缘水平 Rated insulation(kV)	准确级及额定输出 Accuracy class and Rated output(VA)	极限输出 Max. output(VA)
JDZJ8-10 JDZJ8-10R	3000：√3/100：√3, 100:3	3.6/25/40	0.2/3P—25/50 0.2/6P—25/50 0.5/3P—75/50 0.5/6P—75/50 1.0/3P—150/50 1.0/6P—150/50 3.0/3P—300/50 3.0/6P—300/50	400
	3000：√3/110：√3, 110:3	3.6/25/40		
	6000：√3/100：√3, 100:3	7.2/30/60		
	6000：√3/110：√3, 110:3	7.2/30/60		
	6300：√3/100：√3, 100:3	7.2/30/60		
	6300：√3/110：√3, 110:3	7.2/30/60		
	6600：√3/100：√3, 100:3	7.2/30/60		
	6600：√3/110：√3, 110:3	7.2/30/60		
	10000：√3/100：√3, 100:3	12/42/75		
	10000：√3/110：√3, 110:3	12/42/75		
	10500：√3/100：√3, 100:3	12/42/75		
	11000：√3/100：√3, 100:3	12/42/75		
	11000：√3/110：√3, 110:3	12/42/75		

外形尺寸图
Overall dimensions

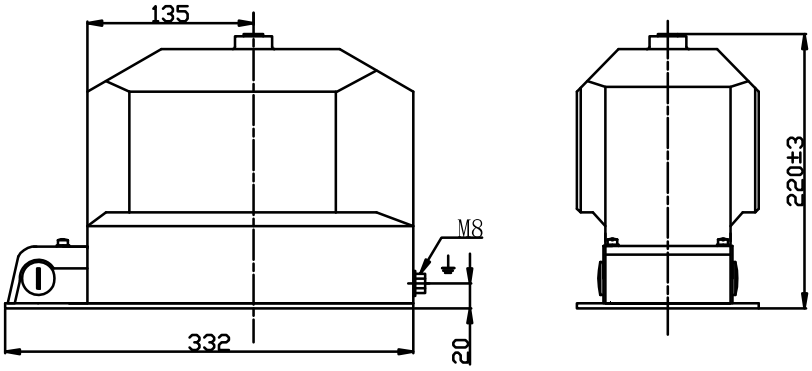

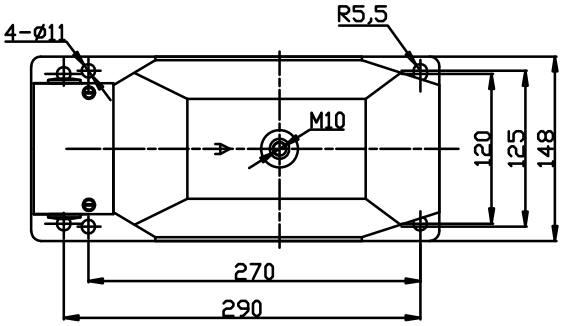

JDZJ8-10　　净重（Weight）：21kg

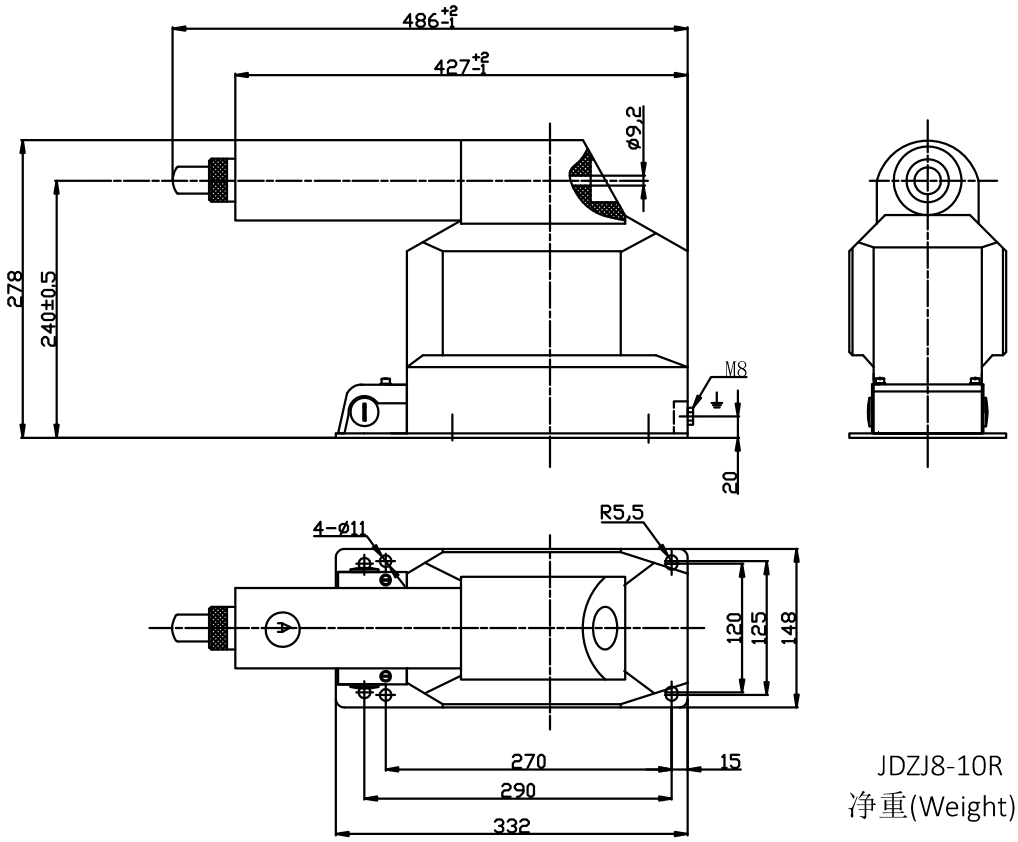

JDZJ8-10R
净重(Weight)：23kg

熔断器尺寸：Φ50（max）mm×260（全长）mm（订货时另注明，本体不配熔断器）

JDZJ8-10; JDZJ8-10R 型电压互感器参见接线图 1
Type JDZJ8-10; JDZJ8-10R voltage transformation see figure1

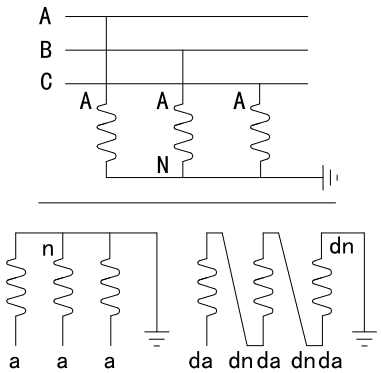

图 1
Figure1

JDZJ10-10A, JDZJ10-10B 型电压互感器

型号 Type	电压比 Voltage ratio(V)	额定绝缘水平 Rated insulation(kV)	准确级及额定输出 Accuracy class and Rated output(VA)	极限输出 Max. output(VA)
JDZJ10-10A	3000：√3/100：√3, 100:3	3.6/25/40	0.2/6P(3P)—15/50 0.5/6P(3P)—30/50 1.0/6P(3P)—60/50	300
	6000：√3/100：√3, 100:3	7.2/30/60		
	10000：√3/100：√3, 100:3	12/42/75		
JDZJ10-10B	3000：√3/100：√3, 100:3	3.6/25/40	0.2/6P(3P)—25/50 0.5/6P(3P)—50/50 1.0/6P(3P)—90/50	400
	6000：√3/100：√3, 100:3	7.2/30/60		
	10000：√3/100：√3, 100:3	12/42/75		
	3000：√3/100：√3, 100：√3, 100:3	3.6/25/40	0.2/0.5/6P(3P)—15/20/50 0.5/0.5/6P(3P)—30/30/50	350(对应第一个测量级)
	6000：√3/100：√3, 100：√3, 100:3	7.2/30/60		
	10000：√3/100：√3, 100：√3, 100:3	12/42/75		

外形尺寸图
Overall dimensions

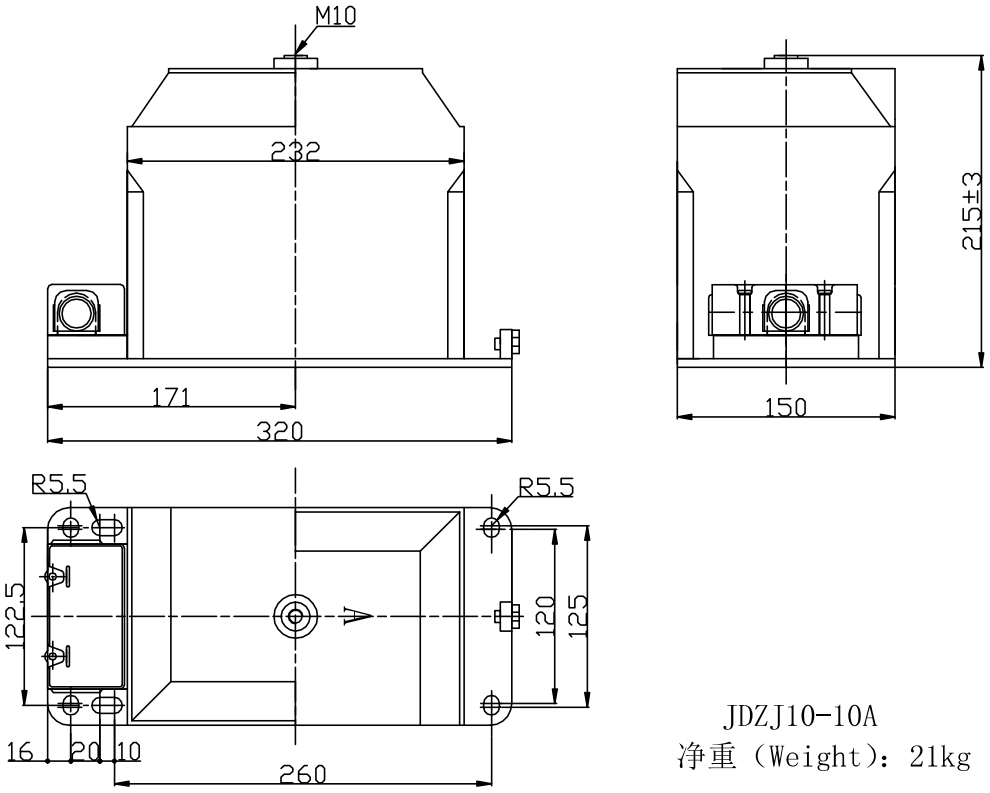

JDZJ10-10A
净重（Weight）：21kg

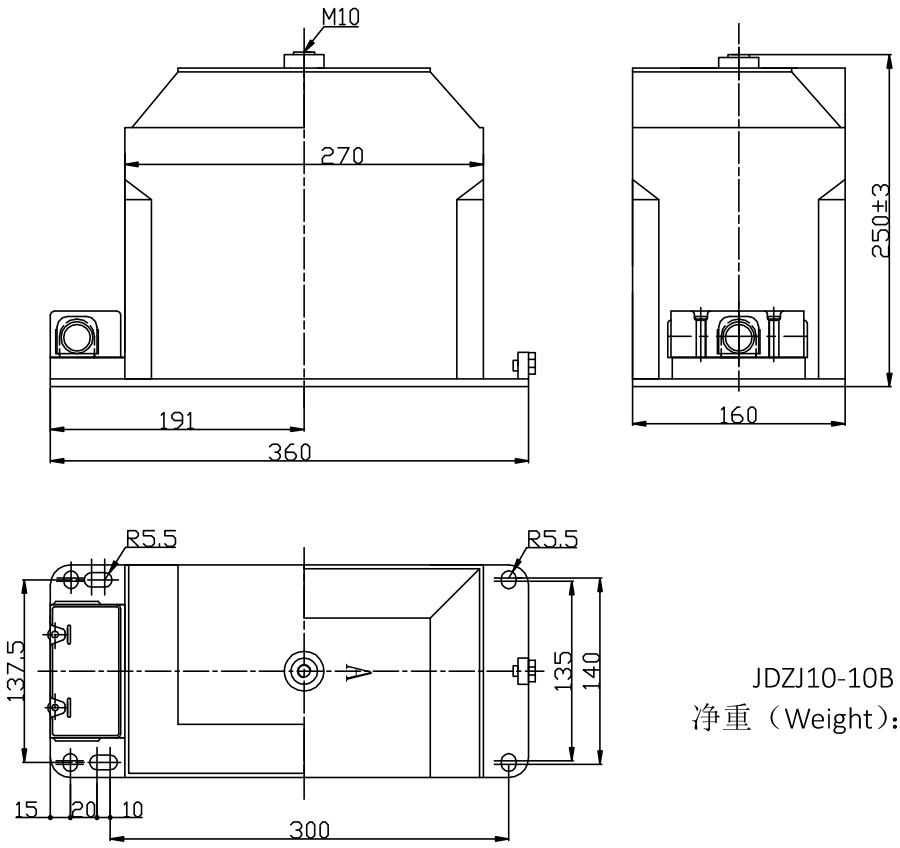

JDZJ10-10B
净重（Weight）：31kg

JDZJ10-10A 型电压互感器参见接线图 1

JDZJ10-10B 型电压互感器参见接线图 1-图 2

Type JDZJ10-10A voltage transformation see figure1

Type JDZJ10-10B voltage transformation see figure1-figure2

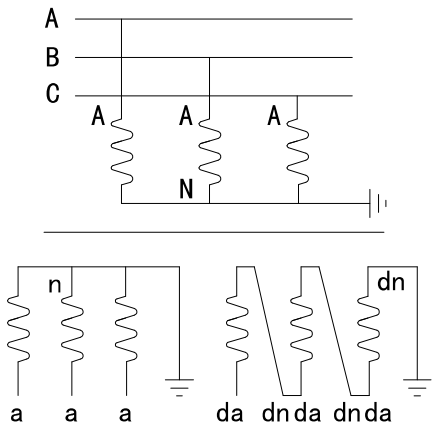

图 1
Figure1

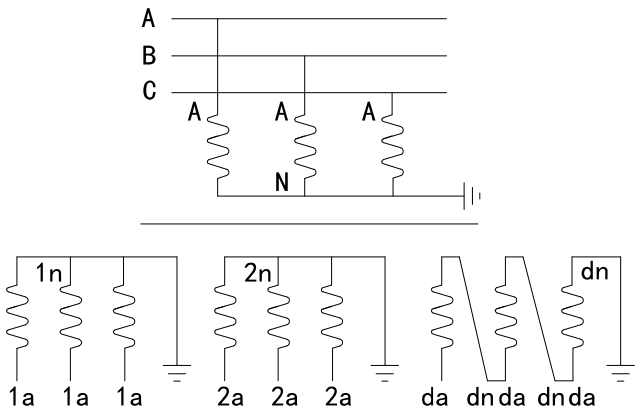

图 2
Figure2

JDZJ11-10 电压互感器

型号 Type	电压比 Voltage ratio(V)	额定绝缘水平 Rated insulation(kV)	准确级及额定输出 Accuracy class and Rated output(VA)	极限输出 Max. output(VA)
JDZJ11-10	3000：√3/100：√3, 100:3	3.6/25/40	0.2/3P—40/100 0.2/6P—40/100 0.5/3P—100/100 0.5/6P—100/100 1.0/3P—200/100 1.0/6P—200/100 3.0/3P—500/100 3.0/6P—500/100	600
	3000：√3/110：√3, 110:3	3.6/25/40		
	6000：√3/100：√3, 100:3	7.2/30/60		
	6000：√3/110：√3, 110:3	7.2/30/60		
	6300：√3/100：√3, 100:3	7.2/30/60		
	6300：√3/110：√3, 110:3	7.2/30/60		
	6600：√3/100：√3, 100:3	7.2/30/60		
	6600：√3/110：√3, 110:3	7.2/30/60		
	10000：√3/100：√3, 100:3	12/42/75		
	10000：√3/110：√3, 110:3	12/42/75		
	10500：√3/100：√3, 100:3	12/42/75		
	11000：√3/100：√3, 100:3	12/42/75		
	11000：√3/110：√3, 110:3	12/42/75		
	6000：√3/100：√3, 100：√3, 100:3	7.2/30/60	0.2/0.5/3P—30/50/100 0.2/0.5/6P—30/50/100 0.2/0.5/3P—30/40/100 0.2/0.5/6P—30/40/100 0.5/0.5/3P—50/50/100 0.5/0.5/6P—50/50/100	600 （对应第一个测量级）
	6600：√3/110：√3, 110：√3, 110:3	7.2/30/60		
	10000：√3/100：√3, 100：√3, 100:3	12/42/75		
	10500：√3/100：√3, 100：√3, 100:3	12/42/75		
	11000：√3/100：√3, 100：√3, 100:3	12/42/75		
	11000：√3/110：√3, 110：√3, 110:3	12/42/75		

外形尺寸图
Overall dimensions

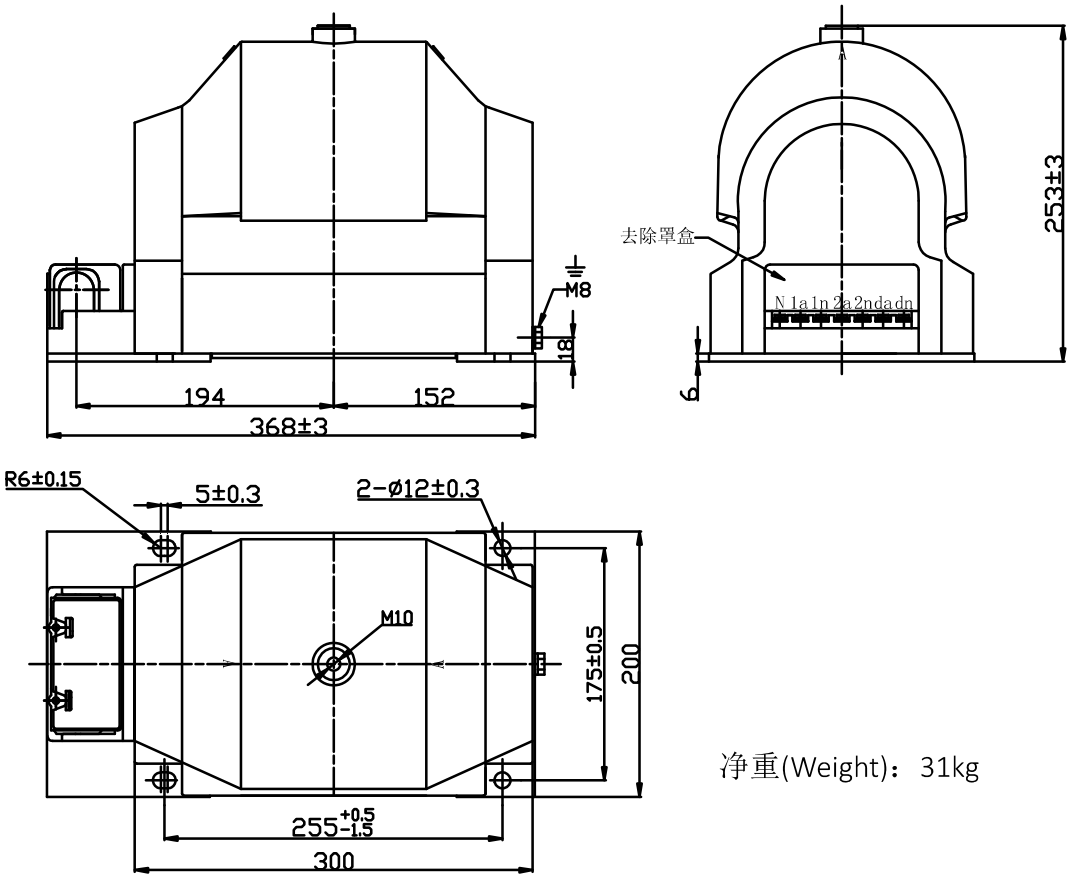

净重(Weight)：31kg

JDZJ11-10 型电压互感器参见接线图 1-图 2
Type JDZJ11-10 voltage transformer see figure1-figure2

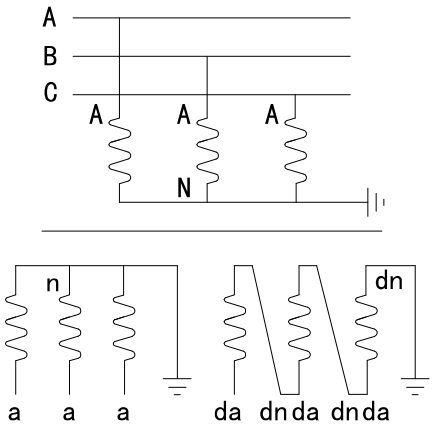

图 1
Figure1

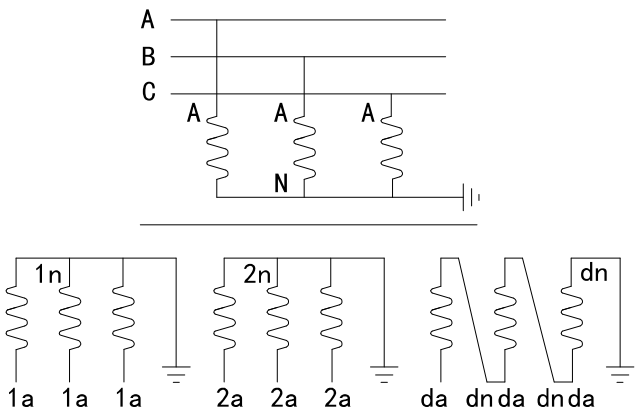

图 2
Figure2

JDZJ12-10A 电压互感器

电压比 Voltage ratio(V)	额定绝缘水平 Rated insulation(kV)	准确级及额定输出 Accuracy class and Rated output(VA)	极限输出 Max. output(VA)
3000：√3/100：√3, 100:3	3.6/25/40	0.2/3P—15/50 0.2/6P—15/50 0.5/3P—30/50 0.5/6P—30/50 1.0/3P—60/50 1.0/6P—60/50 3.0/3P—200/50 3.0/6P—200/50	350
3000：√3/110：√3, 110:3	3.6/25/40		
6000：√3/100：√3, 100:3	7.2/30/60		
6000：√3/110：√3, 110:3	7.2/30/60		
6300：√3/100：√3, 100:3	7.2/30/60		
6300：√3/110：√3, 110:3	7.2/30/60		
6600：√3/100：√3, 100:3	7.2/30/60		
6600：√3/110：√3, 110:3	7.2/30/60		
10000：√3/100：√3, 100:3	12/42/75		
10000：√3/110：√3, 110:3	12/42/75		
10500：√3/100：√3, 100:3	12/42/75		
11000：√3/100：√3, 100:3	12/42/75		
11000：√3/110：√3, 110:3	12/42/75		

外形尺寸图
Overall dimensions

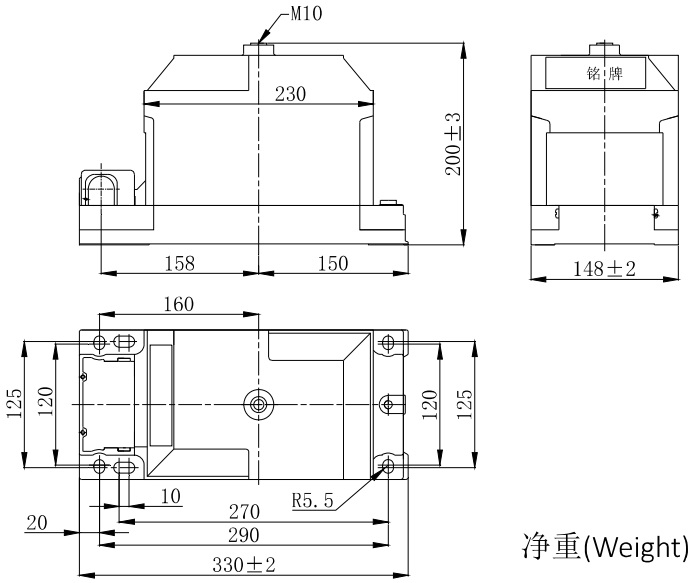

净重(Weight)：18.5kg

JDZJ12-10A 型电压互感器参见接线图 1
Type JDZJ12-10A voltage transformer see figure1

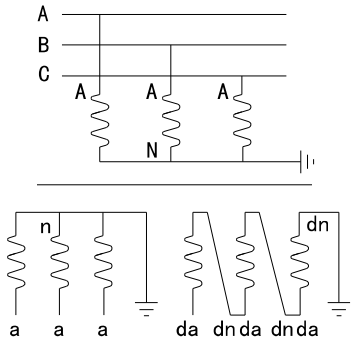

图 1
Figure1

JDZJ13-10、JDZJ13-10R 型电压互感器

型号 Type	电压比 Voltage ratio(V)	额定绝缘水平 Rated insulation(kV)	准确级及额定输出 Accuracy class and Rated output(VA)	极限输出 Max. output(VA)
JDZJ13-10 JDZJ13-10R	6000：√3/100：√3, 100:3	7.2/30/60	0.2/6P(3P)—80/100 0.5/6P(3P)—150/100 1.0/6P(3P)—250/100	800 (注:当有两个测量级时对应第一个测量级)
	10000：√3/100：√3, 100:3	12/42/75		
	6000：√3/100：√3, 100：√3, 100:3	7.2/30/60	0.2/0.5/6P(3P)—50/50/100	
	10000：√3/100：√3, 100：√3, 100:3	12/42/75		

外形尺寸图

Overall dimensions

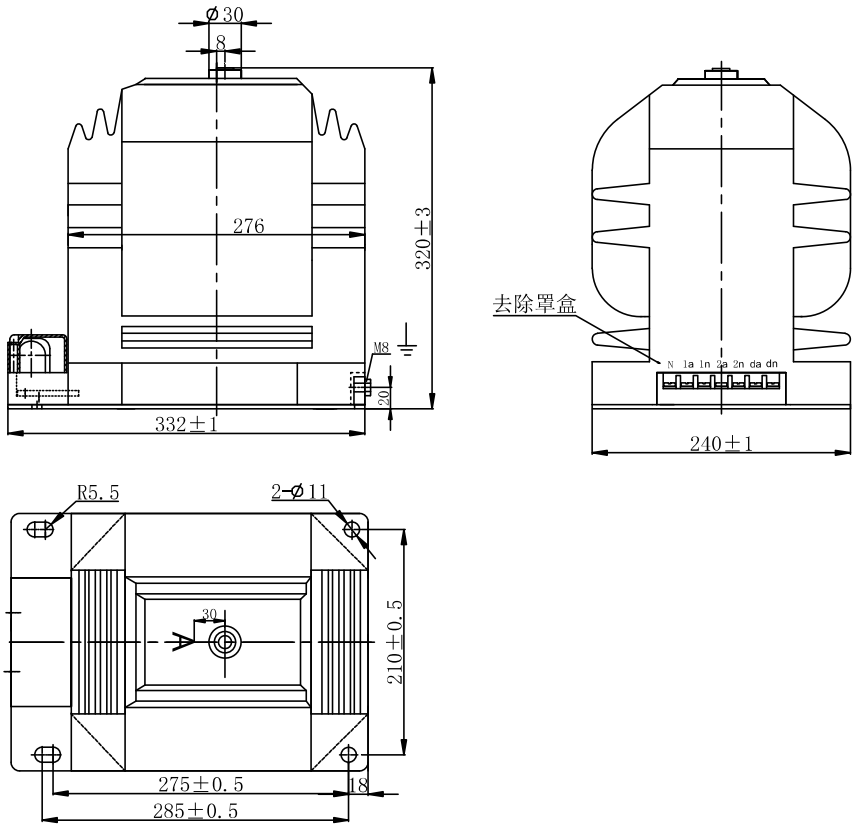

JDZJ13-10　　净重（Weight）：52kg

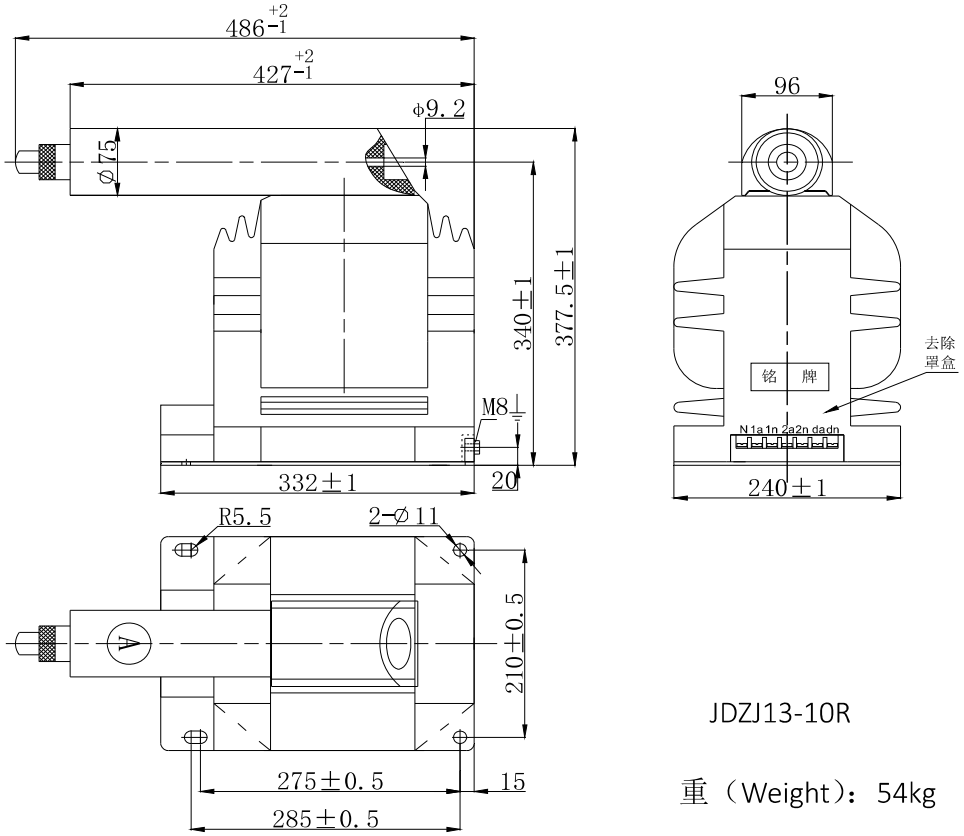

JDZJ13-10R

重（Weight）：54kg

熔断器尺寸：ϕ50（max）mm×260（全长）mm（订货时另注明，本体不配熔断器）

JDZJ13-10; JDZJ13-10R 型电压互感器参见接线图 1-图 2

Type JDZJ13-10;JDZJ13-10R voltage transformer see figure1-figure

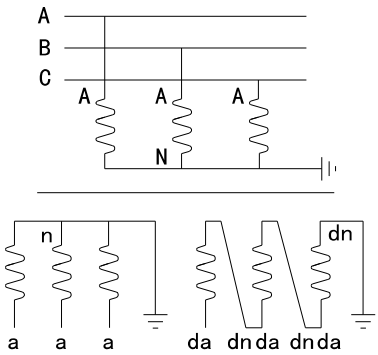

图 1

Figure1

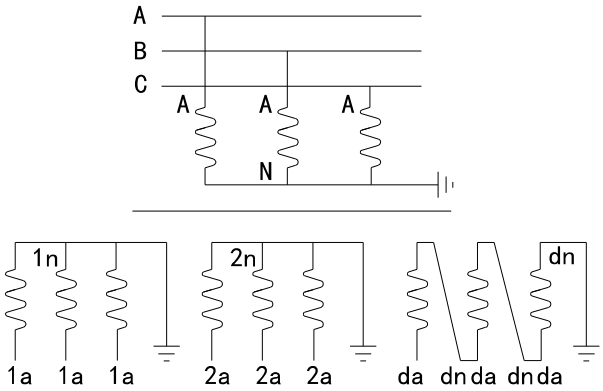

图 2

Figure2

JDZJ17-10、JDZJ17-10R 型电压互感器

型号 Type	电压比 Voltage ratio(V)	额定绝缘水平 Rated insulation(kV)	准确级及额定输出 Accuracy class and Rated output(VA)	极限输出 Max. output(VA)
JDZJ17-10 JDZJ17-10R	6000：√3/100：√3, 100:3	7.2/30/60	0.2/6P(3P)—50/100 0.5/6P(3P)—120/100 1.0/6P(3P)—200/100	500 (注:当有两个测量级时对应第一个测量级)
	10000：√3/100：√3, 100:3	12/42/75		
	6000：√3/100：√3, 100：√3, 100:3	7.2/30/60	0.2/0.5/6P(3P)—30/40/100	
	10000：√3/100：√3, 100：√3, 100:3	12/42/75		

外形尺寸图
Overall dimensions

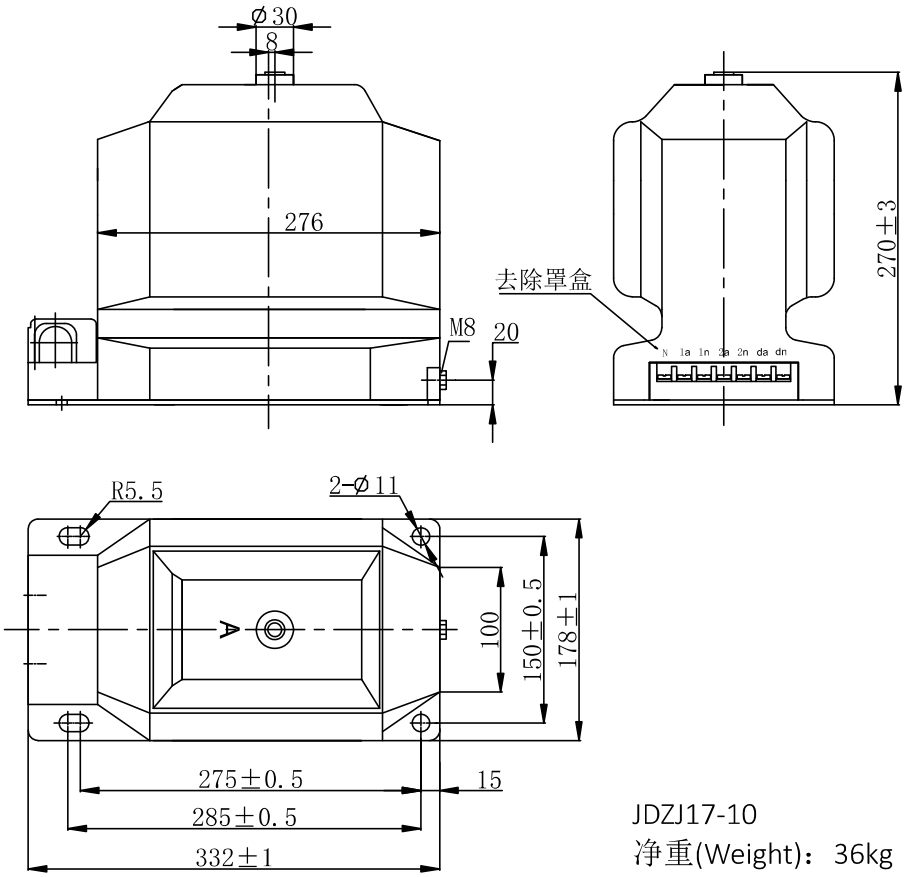

JDZJ17-10
净重(Weight)：36kg

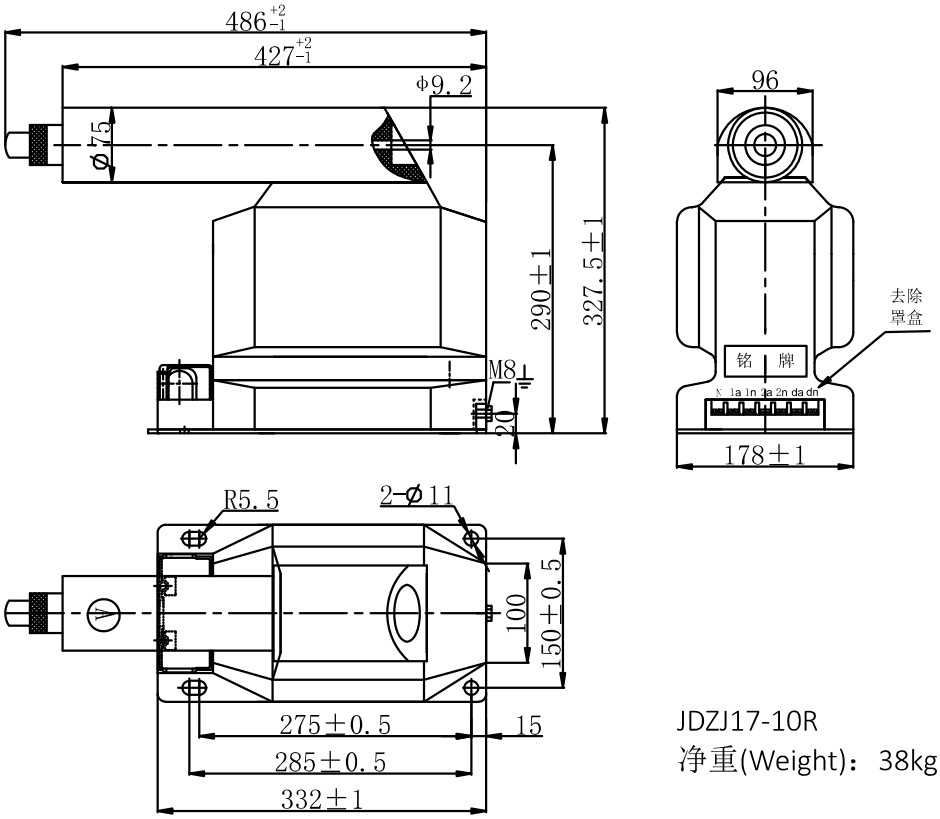

JDZJ17-10R
净重(Weight)：38kg

熔断器尺寸：Φ50（max）mm×260（全长）mm （订货时另注明，本体不配熔断器）

JDZJ17-10; JDZJ17-10R 型电压互感器参见接线图 1-图 2

Type JDZJ17-10; JDZJ17-10R voltage transformer see figure1-figure2

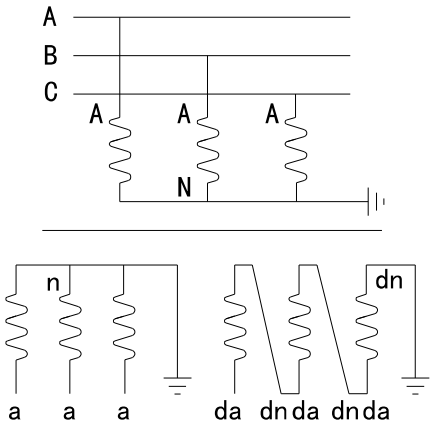

图 1
Figure1

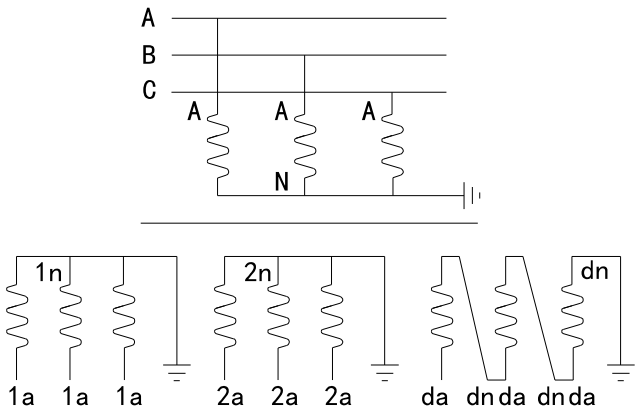

图 2
Figure2

JDZJ18-10R 电压互感器

电压比 Voltage ratio(V)	额定绝缘水平 Rated insulation(kV)	准确级及额定输出 Accuracy class and Rated output(VA)	极限输出 Max. output(VA)
10000：√3/100：√3，380：√3	12/42/75	0.5/6P—50/500	500
10000：√3/100：√3，220：√3	12/42/75		

外形尺寸图
Overall dimensions

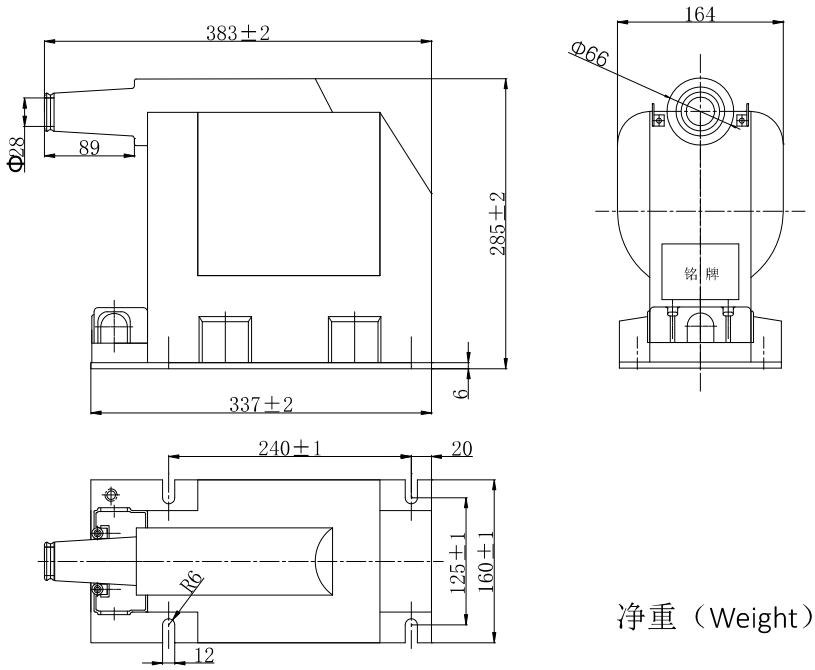

净重（Weight）：49kg

JDZJ18-10R 型电压互感器参见接线图 1
Type JDZJ18-10Rvoltage transformer see figure1

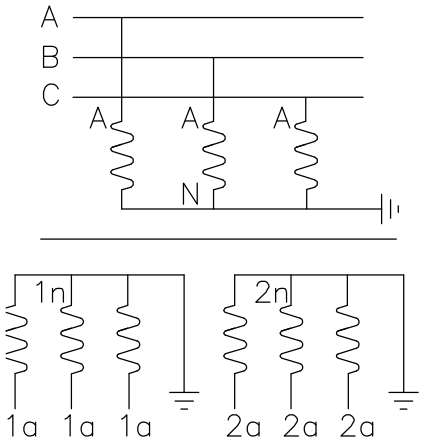

图 1

JDZJ-6, 10(Q)电压互感器

型号 Type	电压比 Voltage ratio(V)	准确级及额定输出 cos φ=0.8 Accuracy class and Rated output(VA)					极限输出 Max. output(VA)
		0.2	0.5	1	3	6P(3P)	
JDZ-6(Q)	6000:√3/100:√3, 100:3	15	30	80	80	30	400
JDZ-10(Q)	10000:√3/100:√3, 100:3	25	50	80	100	50	500

外形尺寸图
Overall dimensions

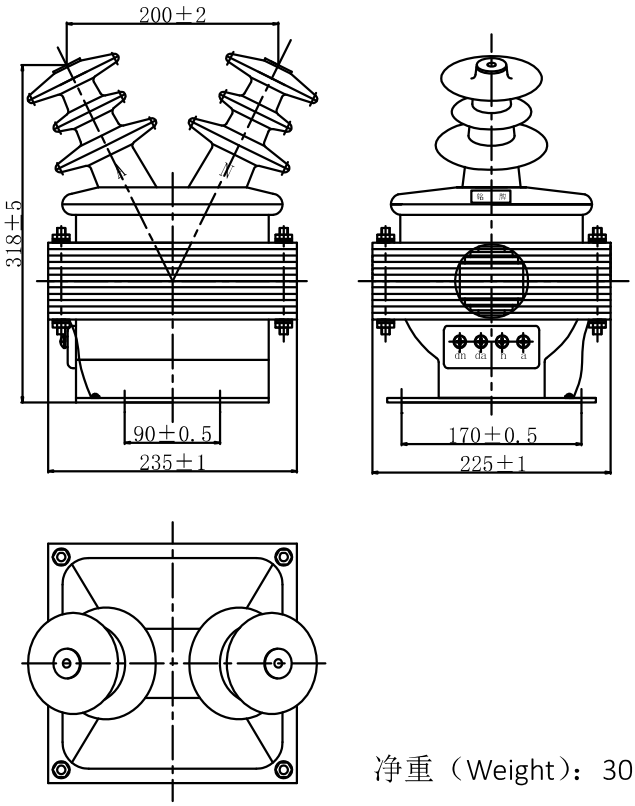

净重（Weight）：30kg

JDZJ-6,10(Q)型电压互感器参见接线图 1
Type JDZJ-6,10(Q) voltage transformer see figure1

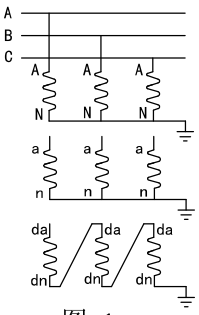

图 1
Figure1

JDZR-10 电压互感器

型号 Type	额定电压比 Rated transformation ratio(V)	额定绝缘水平 Rated insulation(kV)	准确级及额定输出 Accuracy class and Rated output(VA)	热极限输出 Thermal limiting output(VA)
JDZR-10	6000/100	7.2/30/60	0.2-30 0.5-100 1-200 3-500	500
	10000/100	12/42/75		
	10000/110	12/42/75		
	10000/220	12/42/75		
	10000/100/100	12/42/75	0.5/6P 40/500(6P 级绕组短时使用)	
	10000/100/220	12/42/75		

外形尺寸图
Overall dimensions

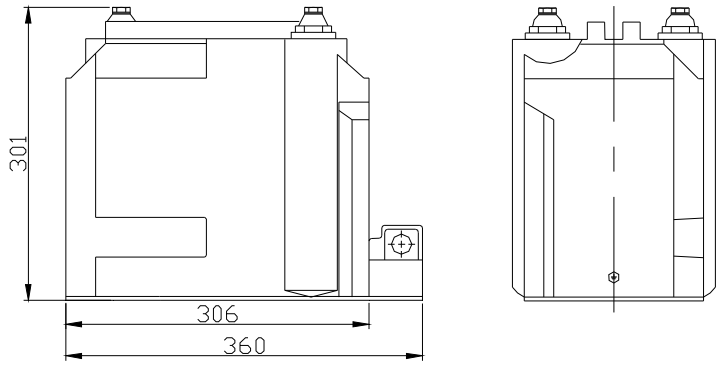

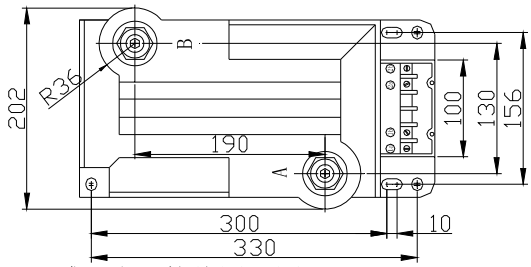

净重（Weight）：33.5kg
熔断器尺寸：
Φ 25mm × 195mm(订货时另注明，本体不配熔断器）

JDZR-10 型电压互感器参见接线图 1-图 4
Type JDZR-10 voltage transformer see figure1-figure4

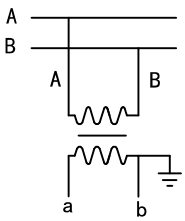

图 1
Figure1

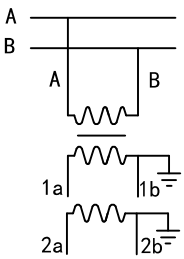

图 2
Figure2

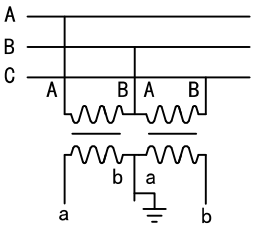

图 3
Figure3

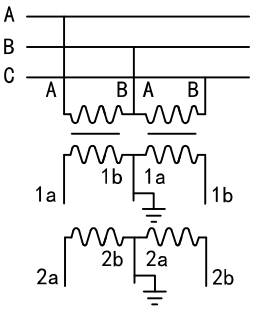

图 4
Figure4

JDZX9-10 电压互感器

型号 Type	电压比 Voltage ratio(V)	额定绝缘水平 Rated insulation(kV)	准确级及额定输出 Accuracy class and Rated output(VA)	极限输出 Max. output(VA)
JDZX9-10	3000：√3/100：√3, 100:3	3.6/25/40	0.2/3P—30/100 0.2/6P—30/100 0.5/3P—90/100 0.5/6P—90/100 1.0/3P—200/100 1.0/6P—200/100 3.0/3P—500/100 3.0/6P—500/100	500
	3000：√3/110：√3, 110:3	3.6/25/40		
	6000：√3/100：√3, 100:3	7.2/30/60		
	6000：√3/110：√3, 110:3	7.2/30/60		
	6300：√3/100：√3, 100:3	7.2/30/60		
	6300：√3/110：√3, 110:3	7.2/30/60		
	6600：√3/100：√3, 100:3	7.2/30/60		
	6600：√3/110：√3, 110:3	7.2/30/60		
	10000：√3/100：√3, 100:3	12/42/75		
	10000：√3/110：√3, 110:3	12/42/75		
	10500：√3/100：√3, 100:3	12/42/75		
	11000：√3/100：√3, 100:3	12/42/75		
	11000：√3/110：√3, 110:3	12/42/75		

外形尺寸图
Overall dimensions

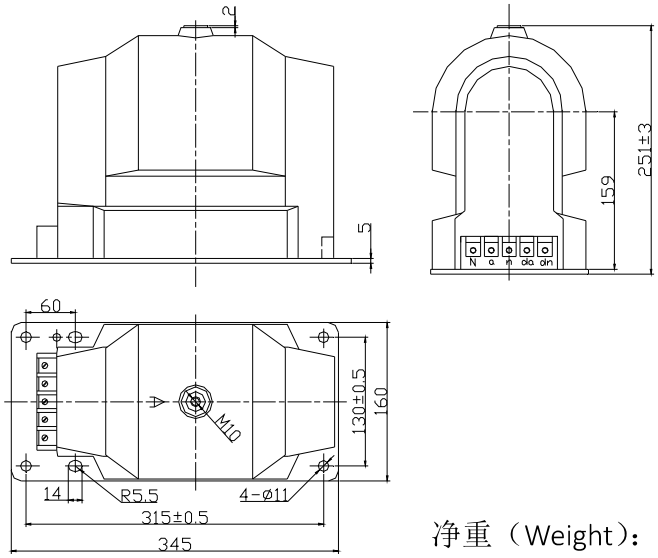

净重（Weight）：26kg

JDZX9-10 型电压互感器参见接线图 1
Type JDZX9-10 voltage transformer see figure1

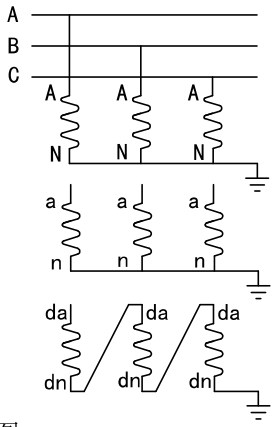

图一

JDZ12-10RG 型电压互感器

电压比 Voltage ratio(V)	额定绝缘水平 Rated insulation(kV)	准确级及额定输出 Accuracy class and Rated output(VA)	极限输出 Max. output(VA)
10000/100	12/72/75	0.2-50 0.5-120 1.0-200 3.0-300	1000
6000/100	7.2/30/60		
10000/100,100	12/72/75	0.2/0.2-15/15 0.2/0.5-20/20 0.5/0.5-50/50	500
6000/100,100	7.2/30/60		
10000/100,220	12/72/75	0.2/3.0-20/300 0.5/3.0-50/1000	300/1200
6000/100,220	7.2/30/60		

外形尺寸图 Overall dimens

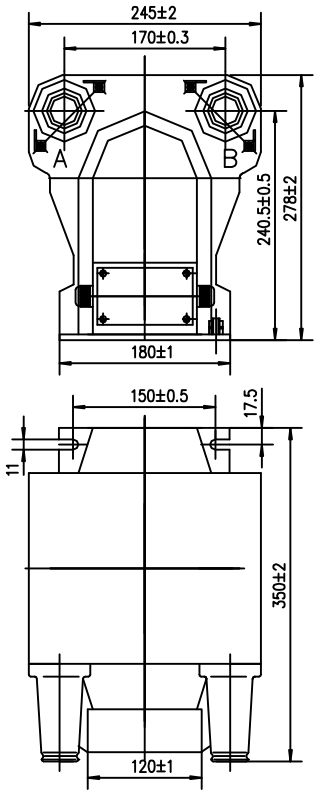

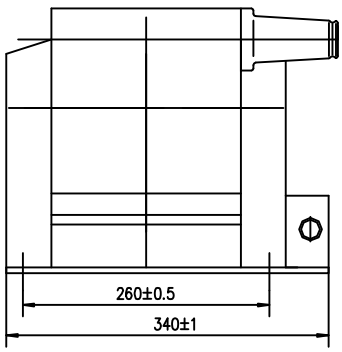

净重(Weight)：33kg

JDZ12-10RG 型电压互感器参见接线图 1 和图 2

Type JDZ12-10RG voltage transformer see figure1 and figure2

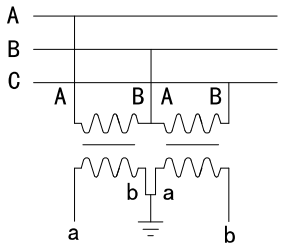

图 1(Figure1)

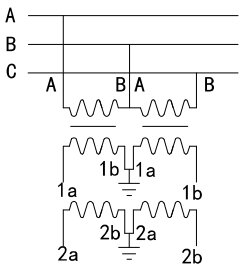

图 2(Figure2)

JSZV12-10RG 电压互感器

电压比 Voltage ratio(V)	额定绝缘水平 Rated insulation(kV)	准确级及额定输出 Accuracy class and Rated output(VA)	极限输出 Max. output(VA)
10000/100	12/72/75	0.2-50 0.5-120 1.0-200 3.0-300	1000
6000/100	7.2/30/60		
10000/100, 100	12/72/75	0.2/0.2-15/15 0.2/0.5-20/20 0.5/0.5-50/50	500
6000/100, 100	7.2/30/60		
10000/100, 220	12/72/75	0.2/3.0-20/300 0.5/3.0-50/1000	300/1200
6000/100, 220	7.2/30/60		

外形尺寸图

Overall dimensions

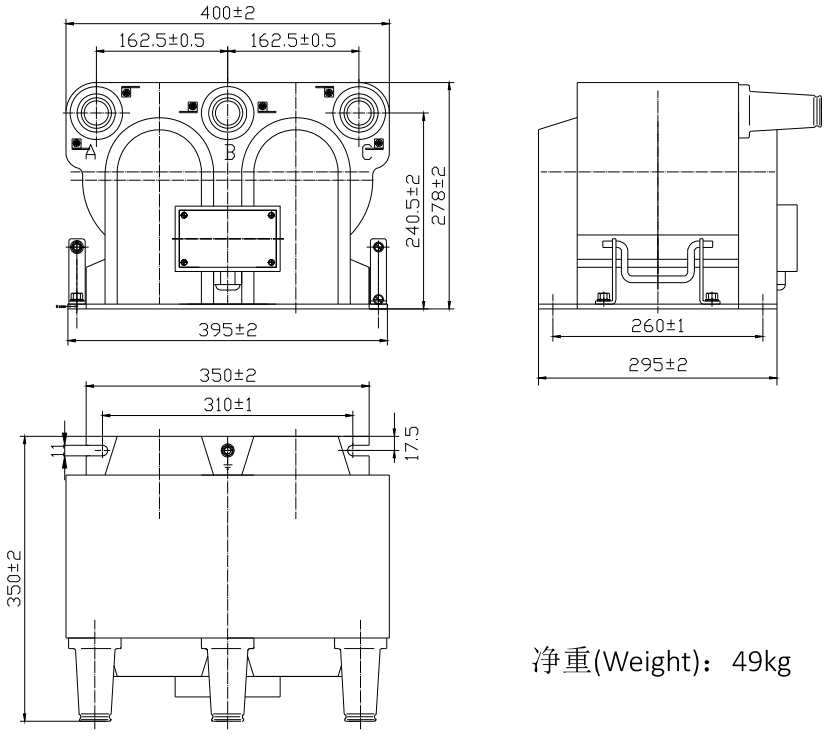

净重(Weight)：49kg

JSZV12-10RG 型电压互感器参见接线图 1 和图 2

Type JSZV12-10RGvoltage transformer see figure1 and figure2

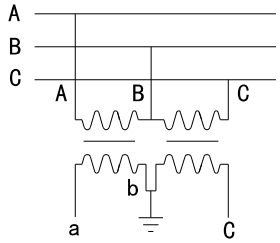

图 1

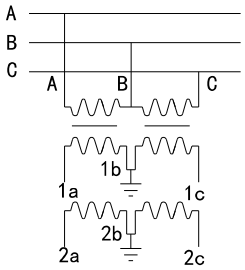

图 2

JSZW12-10R 电压互感器

电压比 Voltage ratio(V)	额定绝缘水平 Rated insulation(kV)	准确级及额定输出 Accuracy class and Rated output(VA)	极限输出 Max. output(VA)
10000：√3/100：√3，100:3	12/42/75	0.2/6P(3P)—3×20/100 0.5/6P(3P)—3×50/100 1.0/6P(3P)—3×100/100 3.0/6P(3P)—3×200/100	3×400
10000：√3/100：√3，100：√3，100:3		0.2/0.2/6P(3P)—3×10/3×10/100 0.2/0.5/6P(3P)—3×10/3×15/100 0.5/0.5/6P(3P)—3×30/3×30/100	3×300/3×300
10000：√3/100：√3，220：√3，100:3		0.5/3.0/6P(3P)—3×30/3×300/100	3×400

外形尺寸图
Overall dimensions

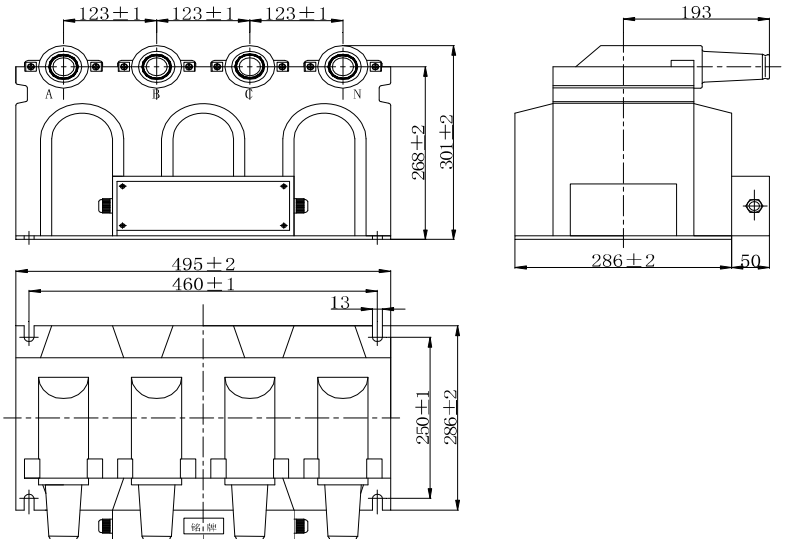

净重（Weight）：72kg

JSZW12-10R 型电压互感器参见接线图 1 和图 2
Type JSZW12-10Rvoltage transformer see figure1 and figure2

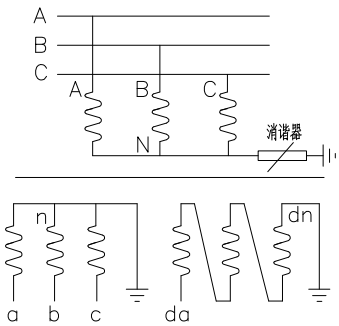

图 1

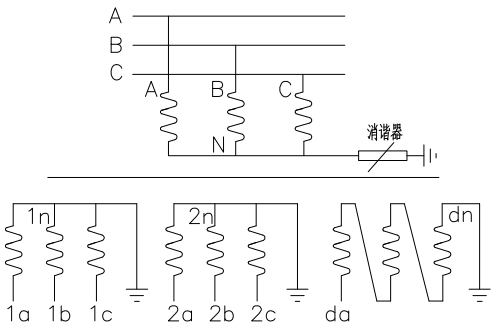

图 2

二、户内浇注电压互感器

20kv 电压互感器

JSZV12-20RG 型电压互感器

电压比 Voltage ratio(V)	额定绝缘水平 Rated insulation(kV)	准确级及额定输出 Accuracy class and Rated output(VA)	极限输出 Max. output(VA)
20000/100	24/65/125	0.2-30 0.5-90 1.0-180	400
20000/100, 10		0.2/0.2-20/20 0.2/0.5-20/20 0.5/0.5-40/40	
20000/100, 220		0.2/3.0-30/300 0.5/3.0-80/500	300/1000

外形尺寸图

Overall dimens

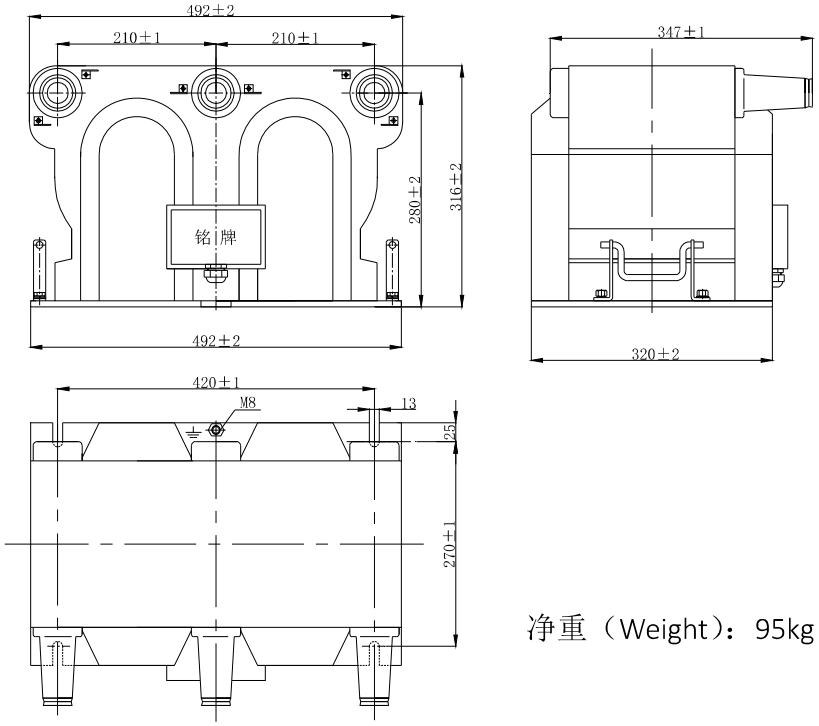

净重（Weight）：95kg

JSZV12-20RG 型电压互感器参见接线图 1 和图 2

Type JSZV12-20RGvoltage transformer see figure1 and figure2

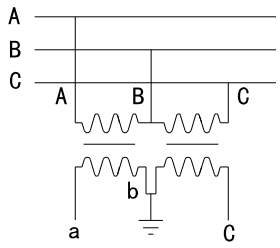

图 1

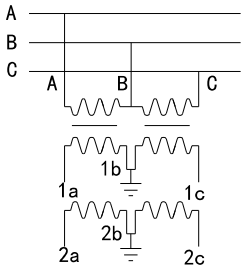

图 2

JDZ11-20W2 电压互感器

型号 Type	电压比 Voltage ratio(V)	额定绝缘水平 Rated insulation(kV)	准确级及额定输出 Accuracy class and Rated output(VA)	极限输出 Max. output(VA)
JDZ11-20W2	15000/100	17.5/55/105	0.2-30 0.5-100 1.0-200	600
	20000/100	24/65/125		
	20000/100, 100	24/65/125	0.2/0.2 15/15 0.2/0.5 15/30 0.5/0.5 30/30	

外形尺寸图
Overall dimensions

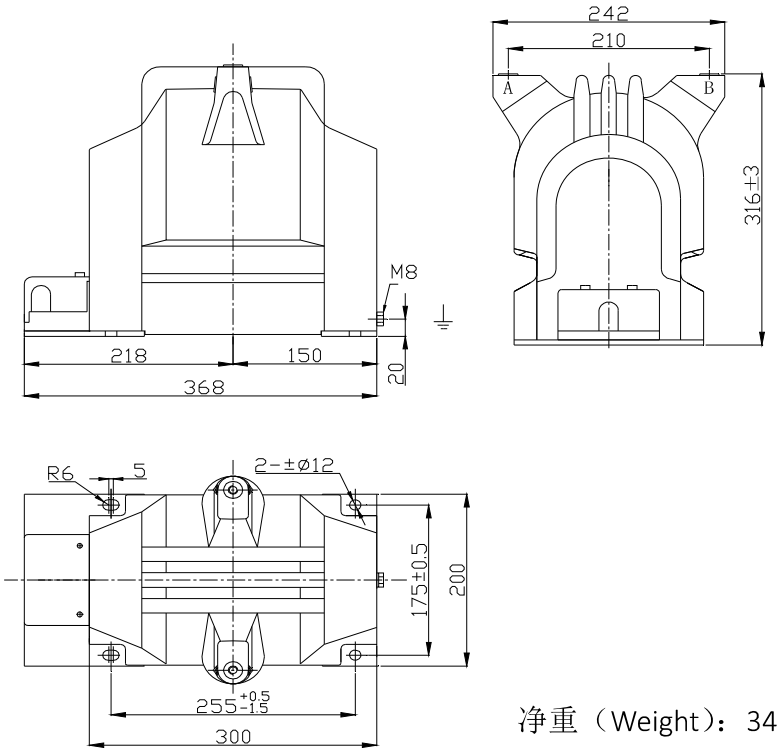

净重（Weight）：34.5kg

JDZ11-20W2 型电压互感器参见接线图 1-图 4
Type JDZ11-20W2 voltage transformer see figure1-figure4

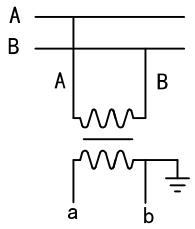

图 1
Figure1

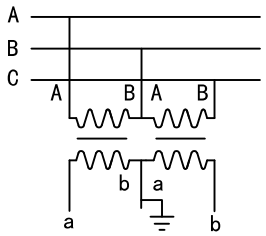

图 2
Figure2

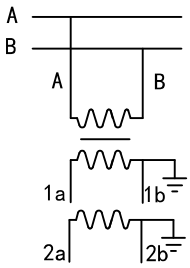

图 3
Figure3

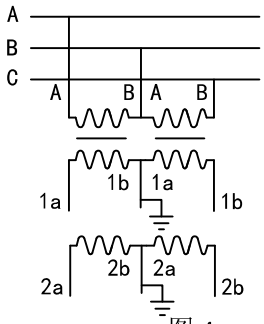

图 4
Figure4

JDZ12-20 电压互感器

电压比 Voltage ratio(V)	额定绝缘水平 Rated insulation(kV)	220V（380/√3 V） 绕组额定容量 Winding rated capacity (VA)	100V 绕组额定容量 Winding rated capacity (VA)	COS Φ
20000/220	24/65/125	3000	100	0.5 或 0.8
20000/220/100				

外形尺寸图
Overall dimensions

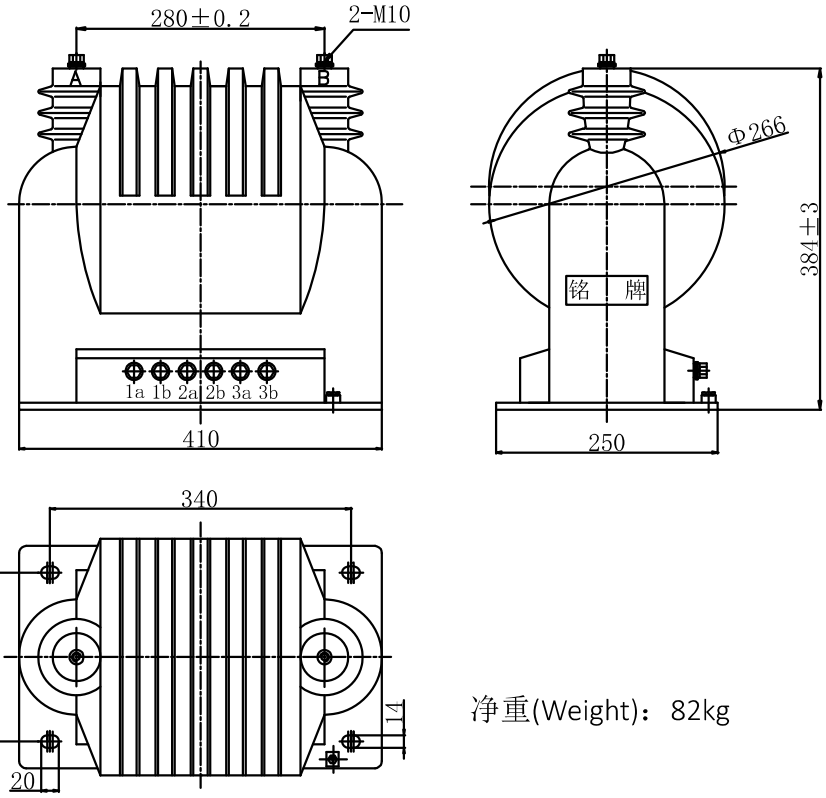

净重(Weight)：82kg

JDZ12-20 型电压互感器参见接线图 1-图 4
Type JDZ12-20 voltage transformer see figure1-4

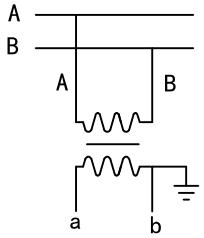

图 1
Figure1

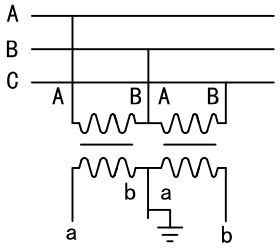

图 2
Figure2

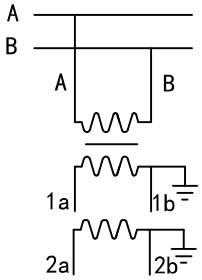

图 3
Figure3

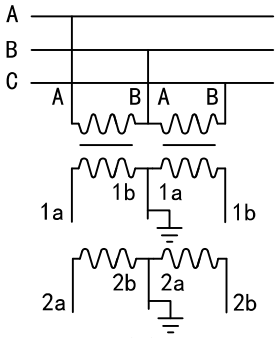

图 4
Figure4

JDZ13-20 电压互感器

电压比 Voltage ratio(V)	额定绝缘水平 Rated insulation(kV)	准确级及额定输出 Accuracy class and Rated output(VA)	极限输出 Max. output(VA)
20000：√3/100：√3, 100：√3, 100:3	24/65/125	0.2/0.5/3P(6P)—30/40/100 0.5/0.5/3P(6P)—40/50/100	800
20000：√3/100：√3, 100：√3, 100：√3, 100:3		0.2/0.5/0.5/3P(6P) —20/20/20/100	

外形尺寸图
Overall dimensions

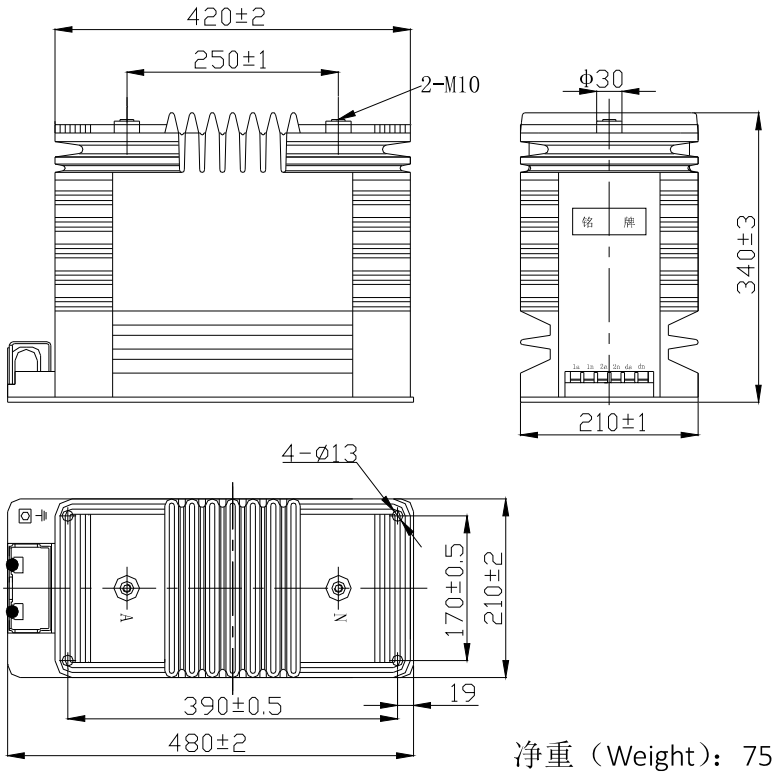

净重（Weight）：75kg

JDZ13-20 型电压互感器参见接线图 1
Type JDZ13-20 voltage transformer see figure1

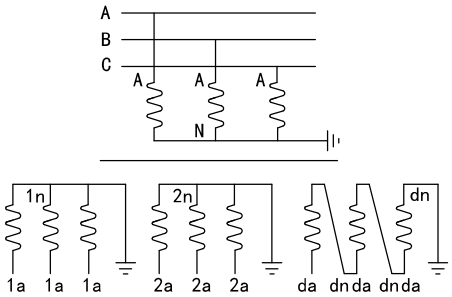

图 1
figure1

JDZ16-20 电压互感器

电压比 Voltage ratio(V)	额定绝缘水平 Rated insulation(kV)	准确级及额定输出 Accuracy class and Rated output(VA)
20000/100	24/65/125	0.5-100 0.2-50
20000/100/100	24/65/125	0.2/0.5-30/50

外形尺寸图
Overall dimensions

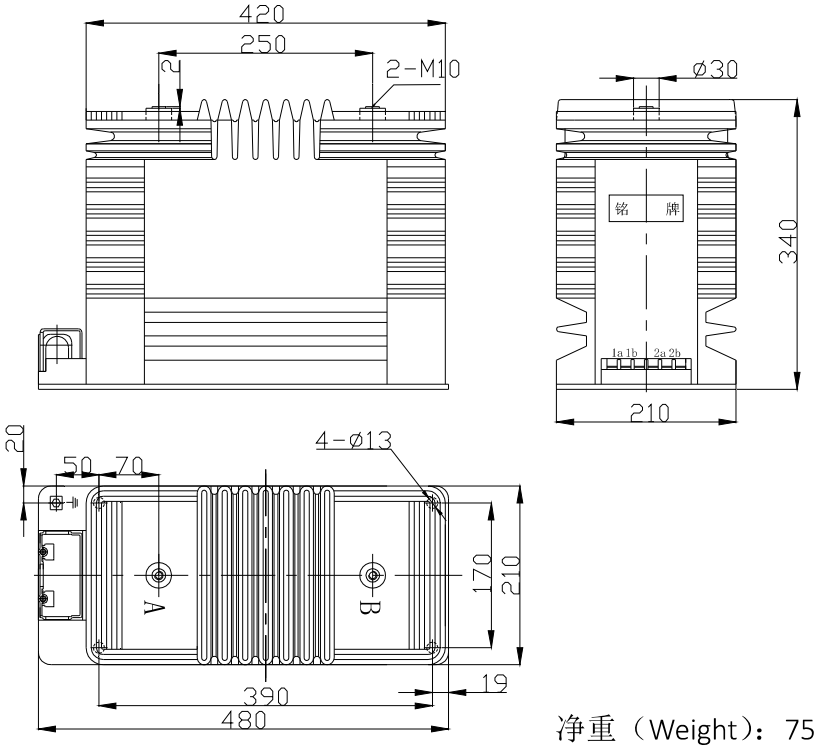

净重（Weight）：75kg

JDZ16-20 型电压互感器参见接线图 1-图 2
Type JDZ16-20 voltage transformer see figure1-figure2

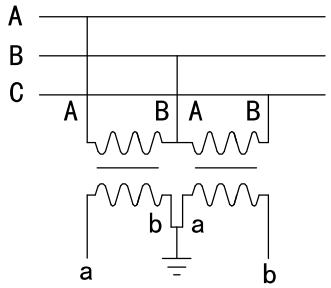

图 1
Figure1

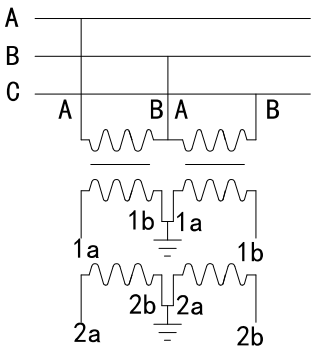

图 2
Figure2

JDZJ11-20 电压互感器

型号 Type	电压比 Voltage ratio(V)	额定绝缘水平 Rated insulation(kV)	准确级及额定输出 Accuracy class and Rated output(VA)	极限输出 Max. output(VA)
JDZJ11-20	15000：√3/100：√3, 100:3	17.5/55/105	0.2/3P—45/100 0.2/6P—45/100 0.5/3P—100/100 0.5/6P—100/100 1.0/3P—200/100 1.0/6P—200/100	600 (注:当有两个测量级时对应第一个测量级)
	15000：√3/110：√3, 110:3	17.5/55/105		
	20000：√3/100：√3, 100:3	24/65/125		
	20000：√3/110：√3, 110:3	24/65/125		
	24000：√3/100：√3, 100:3	24/65/125		
	15000：√3/100：√3, 100：√3, 100:3	17.5/55/105	0.2/0.5/3P—30/30/100 0.2/0.5/6P—30/30/100	
	20000：√3/100：√3, 100：√3, 100:3	24/65/125		

外形尺寸图
Overall dimensions

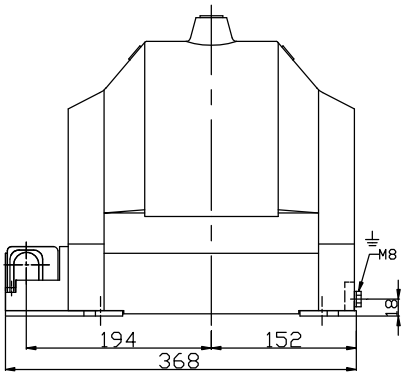

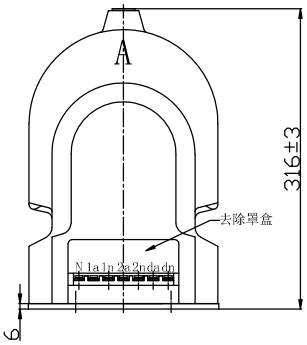

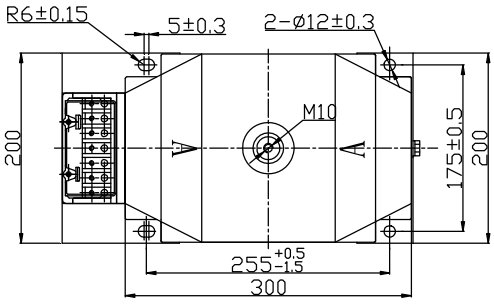

净重（Weight）：38kg

JDZJ11-20 型电压互感器参见接线图 1-图 2
Type JDZJ11-20 voltage transformer see figure1-figure2

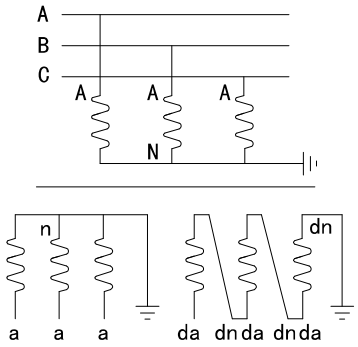

图 1
Figure1

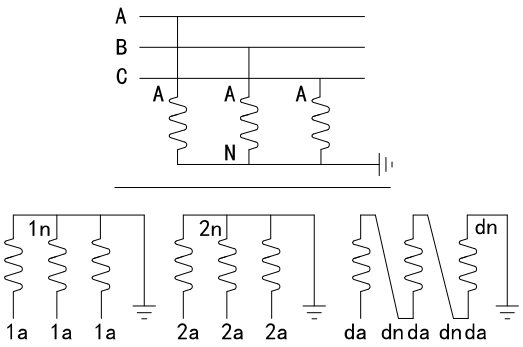

图 2
Figure2

JDZJ12-20 电压互感器

电压比 Voltage ratio(V)	额定绝缘水平 Rated insulation(kV)	准确级及额定输出 Accuracy class and Rated output(VA)	极限输出 Max. output(VA)
20000：√3/100：√3, 100：√3, 100:3	24/65/125	0.2/0.5/3P(6P)—30/40/100 0.5/0.5/3P(6P)—50/50/100	700

外形尺寸图
Overall dimensions

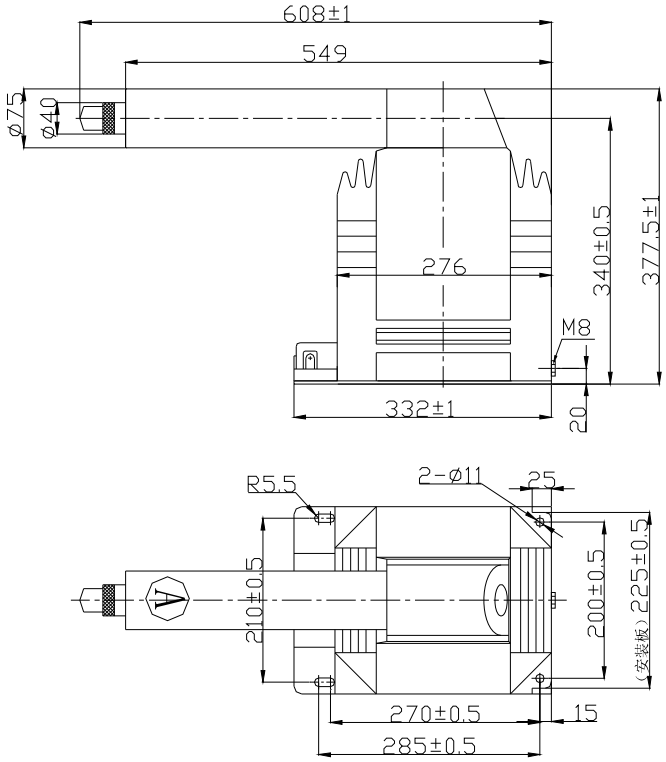

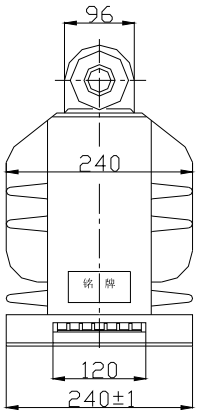

净重（Weight）：50kg
配熔断器尺寸：
Φ50（max）mm×260（全长）mm
(订货时另注明，本体不配熔断器）

JDZJ12-20 型电压互感器参见接线图 1
Type JDZJ12-20 voltage transformer see figure1

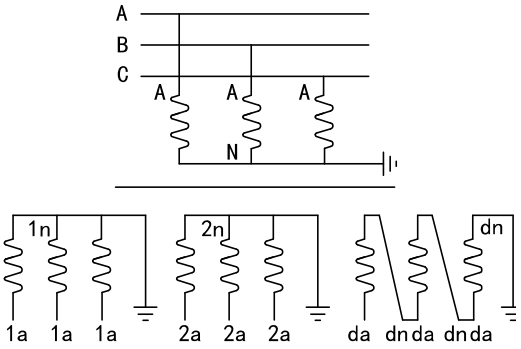

图 1
figure1

JDZJ13-20 电压互感器

电压比 Voltage ratio(V)	额定绝缘水平 Rated insulation(kV)	准确级及额定输出 Accuracy class and Rated output(VA)	极限输出 Max. output(VA)
20000：√3/100：√3, 100:3	24/65/125	0.2/3P(6P)—20/50 0.5/3P(6P)—40/50	400

外形尺寸图
Overall dimensions

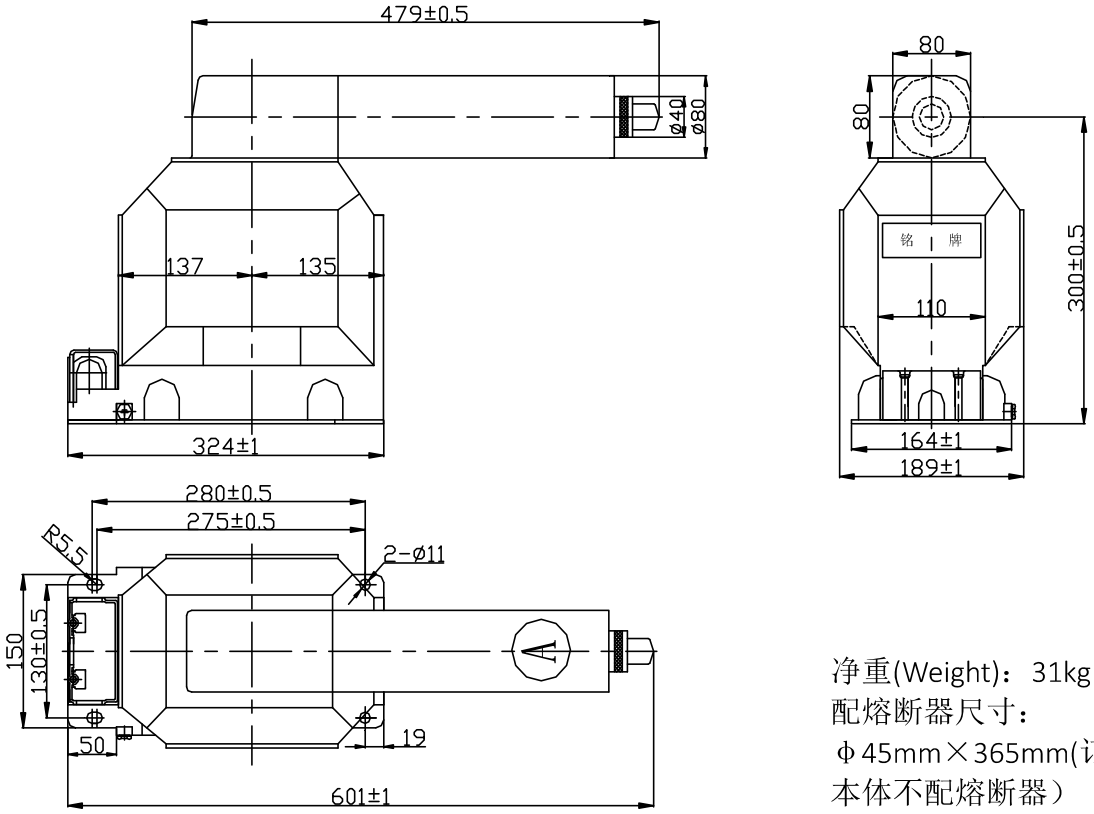

净重(Weight)：31kg
配熔断器尺寸：
Φ45mm×365mm(订货时另注明，本体不配熔断器）

JDZJ13-20 型电压互感器参见接线图 1
Type JDZJ13-20 voltage transformer see figure1

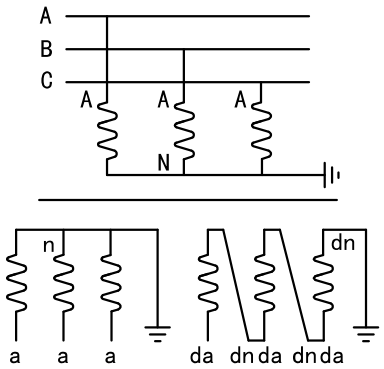

图 1
figure1

JDZX11-20W2 电压互感器

型号 Type	电压比 Voltage ratio(V)	额定绝缘水平 Rated insulation(kV)	准确级及额定输出 Accuracy class and Rated output(VA)	极限输出 Max. output(VA)
JDZX11-20W2	15000：√3/100：√3, 100:3	17.5/55/105	0.2/3P—45/100 0.2/6P—45/100 0.5/3P—100/100 0.5/6P—100/100 1.0/3P—200/100 1.0/6P—200/100	600 （注：有两个测量级时对应第一个测量级）
	15000：√3/110：√3, 110:3			
	20000：√3/100：√3, 100:3	24/65/125		
	20000：√3/110：√3, 110:3			
	24000：√3/100：√3, 100:3			
	15000：√3/100：√3, 100：√3, 100:3	17.5/55/105	0.2/0.5/3P—30/30/100 0.2/0.5/6P—30/30/100	
	20000：√3/100：√3, 100：√3, 100:3	24/65/125		

外形尺寸图
Overall dimensions

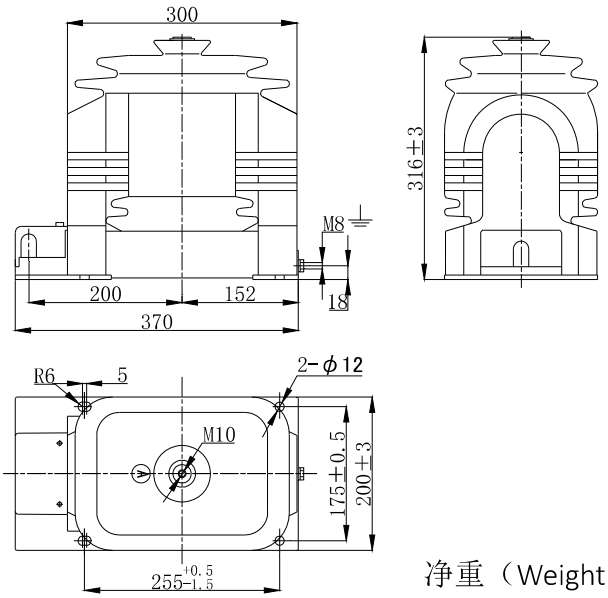

净重（Weight）：38kg

JDZX11-20W2 型电压互感器参见接线图 1-图 2
Type JDZX11-20W2voltage transformer see figure1-figure2

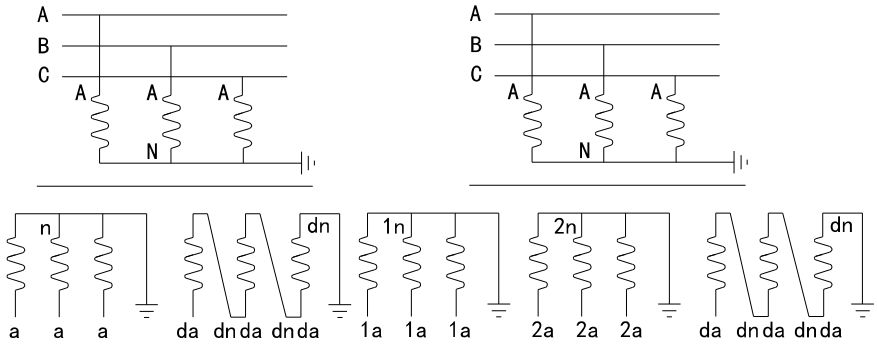

图 1
Figure1

图 2
Figure2

二、户内浇注电压互感器

35kv 电压互感器

JDZ11-35 电压互感器

型号 Type	额定电压比 Rated transformation ratio(V)	额定绝缘水平 Rated insulation(KV)	准确级及额定输出 Accuracy class and Rated output(VA)	热极限输出 Thermal limiting output(VA)
JDZ11-35	35000/100	40.5/95/200	0.2-45 0.5-100 1.0-200 3.0-500	600 （注：有两个测量级时对应第一个测量级）
	35000/100/100	40.5/95/200	0.2/0.5-30/30	

外形尺寸图
Overall dimensions

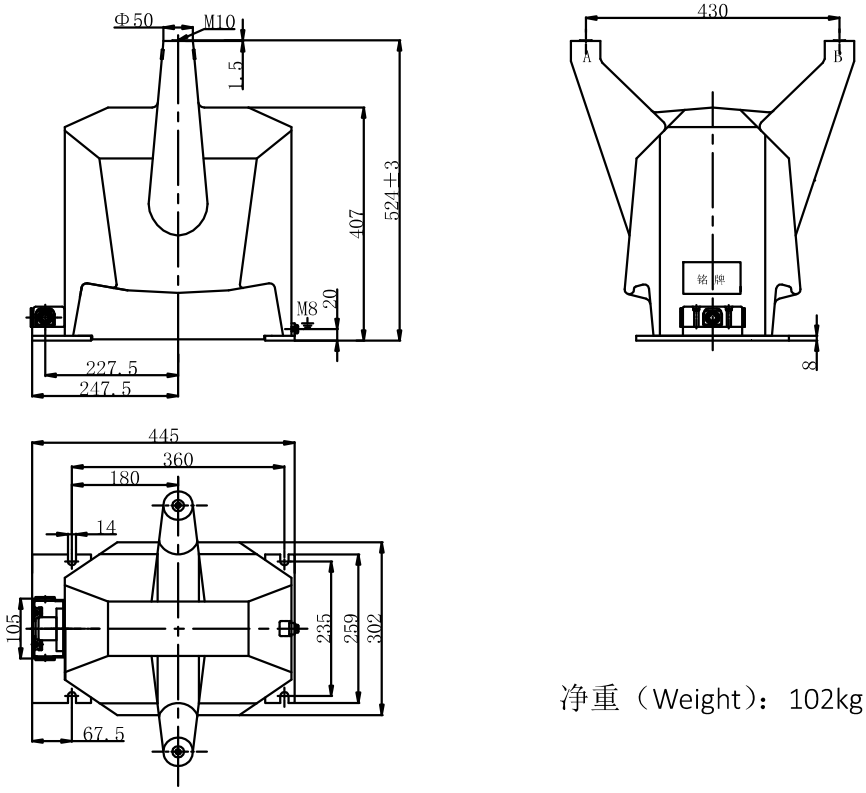

净重（Weight）：102kg

JDZ11-35 型电压互感器参见接线图 1-图 4。
Type JDZ11-35voltage transformer see figure1-figure 4

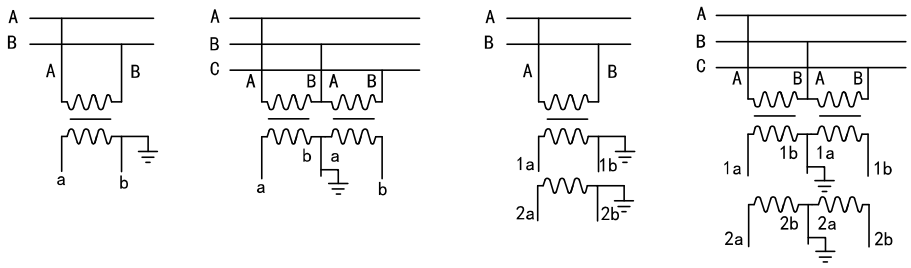

图 1 Figure1　图 2 Figure2　图 3 Figure3　图 4 Figure4

JDZ12-35R 型电压互感器

型号 Type	电压比 Voltage ratio(V)	额定绝缘水平 Rated insulation(kV)	准确级及额定输出 Accuracy class and Rated output(VA)	极限输出 Max. output(VA)
JDZ12-35R	35/0.1	40.5/95/200	0.2—45 0.5—100 1.0—200	600 (注：当有两个测量级时对应第一个测量级)
	35/0.1/0.1		0.2/0.5—20/30	

外形尺寸图
Overall dimensions

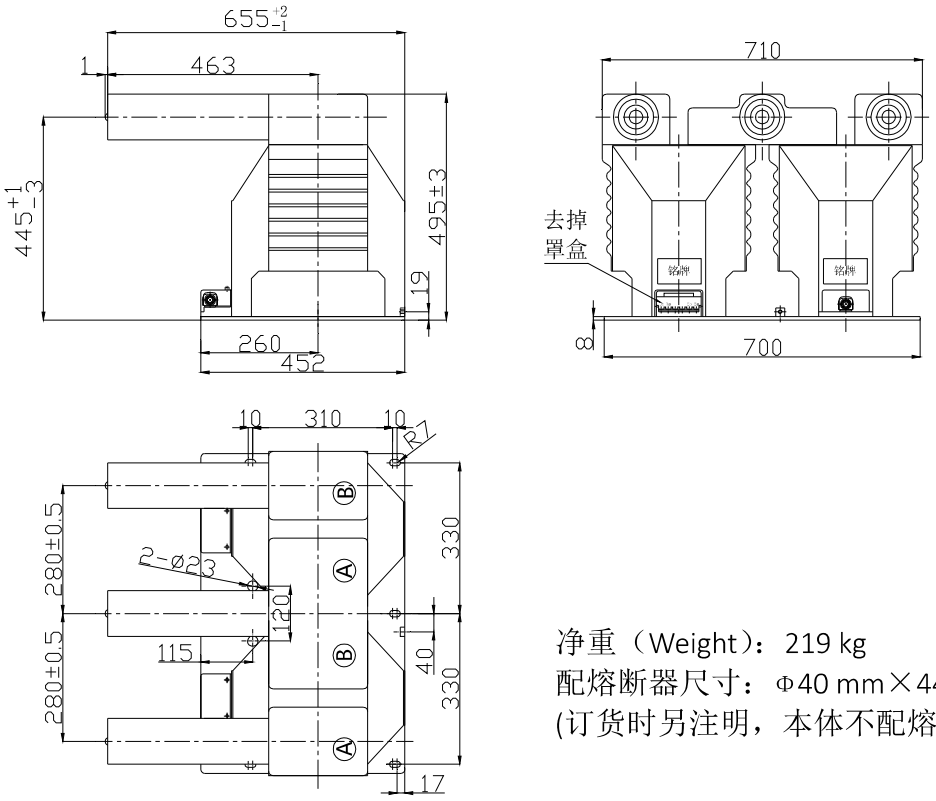

净重（Weight）：219 kg
配熔断器尺寸：Φ40 mm×440 mm
(订货时另注明，本体不配熔断器）

JDZ12-35R 型电压互感器接线图 1-图 4

Type JDZ12-35R voltage transformer see figure 1- figure 4.

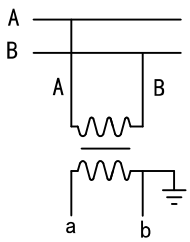

图 1
Figure1

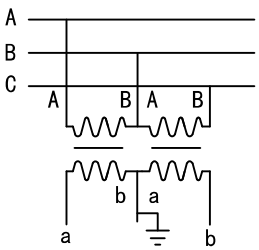

图 2
Figure1

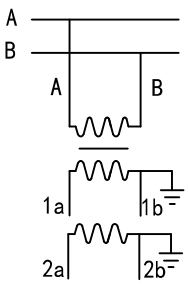

图 3
Figure1

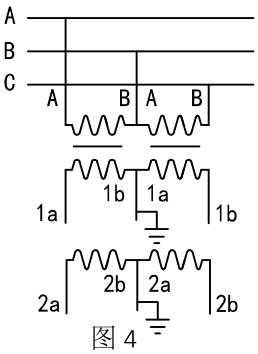

图 4
Figure1

JDZ13-35, JDZ13-27.5 电压互感器

型号 Type	电压比 Voltage ratio(V)	额定绝缘水平 Rated insulation(kV)	准确级及额定输出 Accuracy class and Rated output(VA)	极限输出 Max. output(VA)
JDZ13-27.5	27500/100	31.5/95/200	0.2-80 0.5-200	800
JDZ13-35	35000/100	40.5/95/200		
JDZ13-27.5	27500/100/100	31.5/95/200	0.2/0.2-30/30 0.2/0.5-30/40 0.5/0.5-60/60	400 （当有两个测量级时对应第一个测量级）
JDZ13-35	35000/100/100	40.5/95/200		

外形尺寸图
Overall dimensions

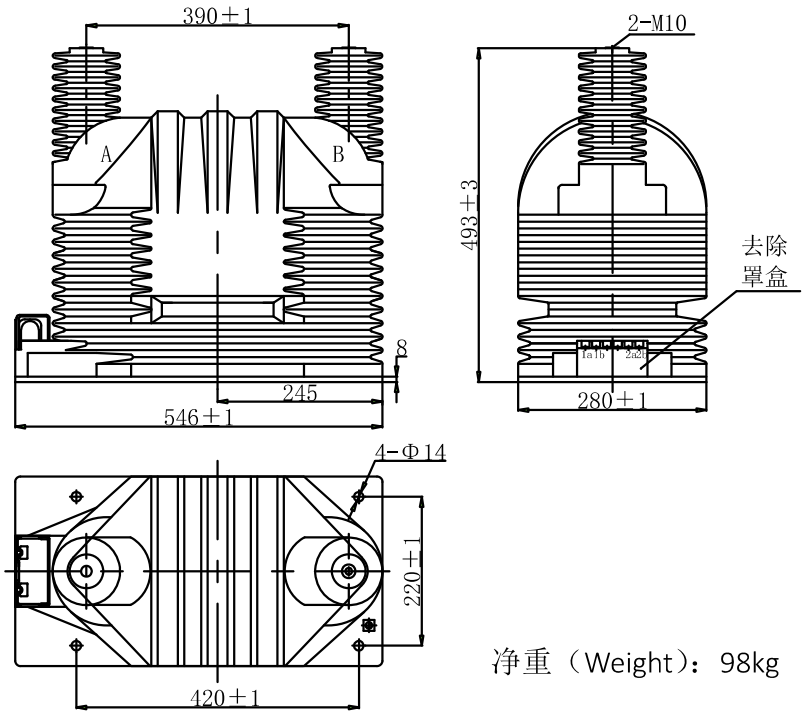

净重（Weight）：98kg

JDZ13-35,JDZ13-27.5 型电压互感器参见接线图 1-图 2
Type JDZ13-35 ,JDZ13-27.5 voltage transformer see figure1- figure 2

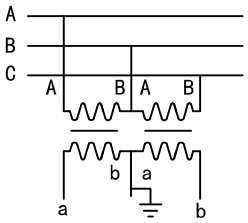

图 1
Figure1

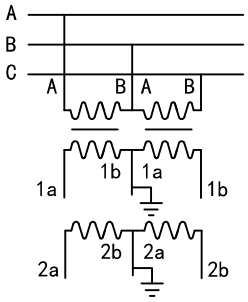

图 2
Figure2

JDZ14-35R 型电压互感器

电压比 Voltage ratio(V)	额定绝缘水平 Rated insulation(kV)	准确级及额定输出 Accuracy class and Rated output(VA)	极限输出 Max. output(VA)
35/0.1	40.5/95/200	0.2—30 0.5—50 1.0—100	400

外形尺寸图
Overall dimensions

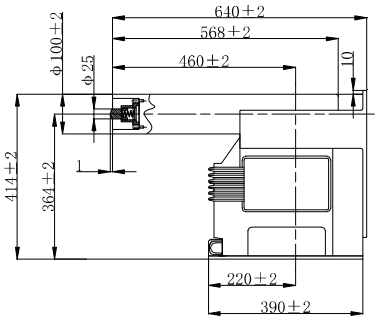

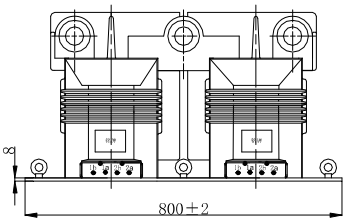

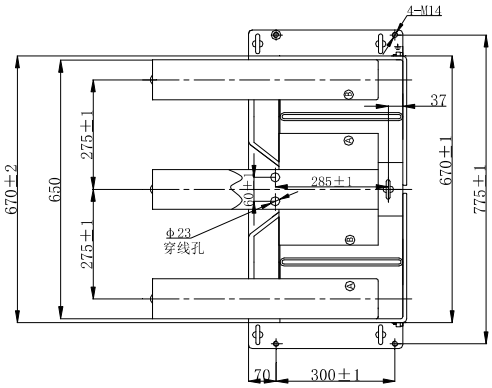

净重（Weight）：156 kg
配熔断器尺寸：Φ40 mm×440 mm
(订货时另注明，本体不配熔断器）

JDZ14-35R 型电压互感器接线图 1

Type JDZ14-35R voltage transformer see figure 1

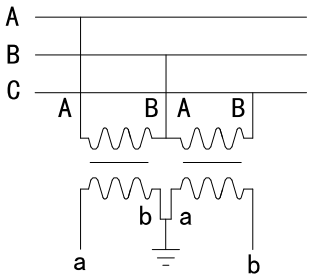

图 1

Figure1

JDZ19-35 型电压互感器

电压比 Voltage ratio(V)	额定绝缘水平 Rated insulation(kV)	准确级及额定输出 Accuracy class and Rated output(VA)	极限输出 Max. output(VA)
35000：√3/100：√3, 100：√3, 100:3	40.5/95/200	0.2/0.5/3P-30/50/100 0.2/0.5/6P-30/50/100 0.5/0.5/3P-50/50/100 0.5/0.5/6P-50/50/100	800 （注：有 2 个测量级时对应第一个测量级）
35000：√3/100：√3, 100：√3, 100：√3, 100:3		0.2/0.5/0.5/3P 20/20/20/100	

外形尺寸图
Overall dimensions

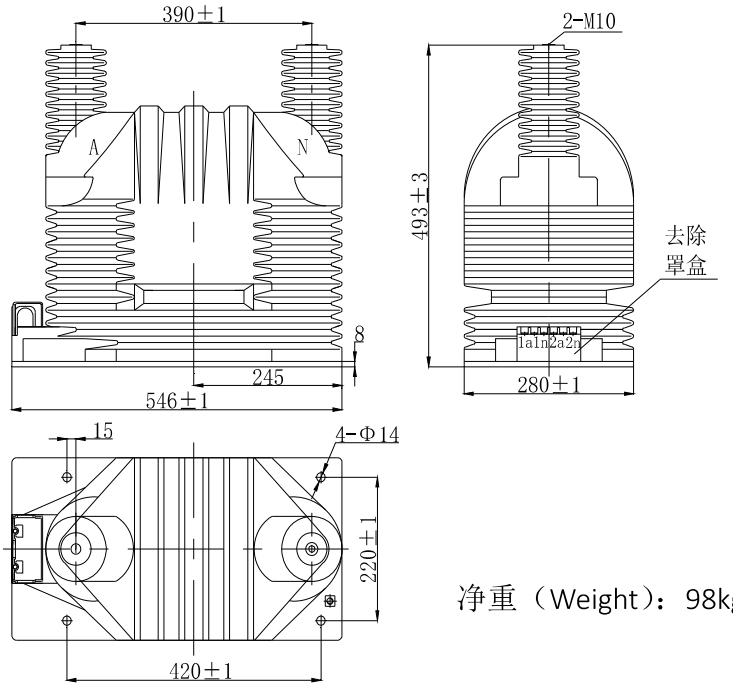

净重（Weight）：98kg

JDZ19-35 型电压互感器参见接线图 1
Type JDZ19-35 voltage transformer see figure 1

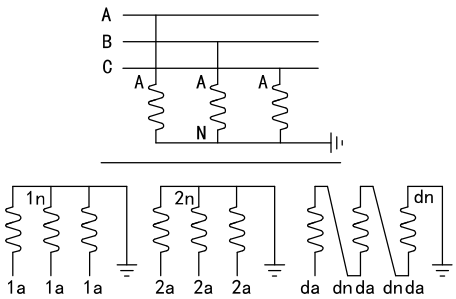

图 1
Figure 1

JDZJ9-35R, JDZJ9-27.5R 型电压互感器

型号 Type	电压比 Voltage ratio(V)	额定绝缘水平 Rated insulation(kV)	准确级及额定输出 Accuracy class and Rated output(VA)	极限输出 Max. output(VA)
JDZJ9-27.5R	27500/100	31.5/95/200	0.2-100 0.5-200	600
JDZJ9-35R	35000：√3/100：√3, 100：3	40.5/95/200	0.2/3P(6P)—45/100 0.5/3P(6P)—100/100 1.0/3P(6P)—200/100	600
	35000：√3/100：√3, 100：√3, 100：3		0.2/0.2/3P(6P)—15/15/100 0.2/0.5/3P(6P)—20/30/100 0.5/0.5/3P(6P)—40/40/100	600 （当有两个测量级时对应第一个测量级）

外形尺寸图

Overall dimensions

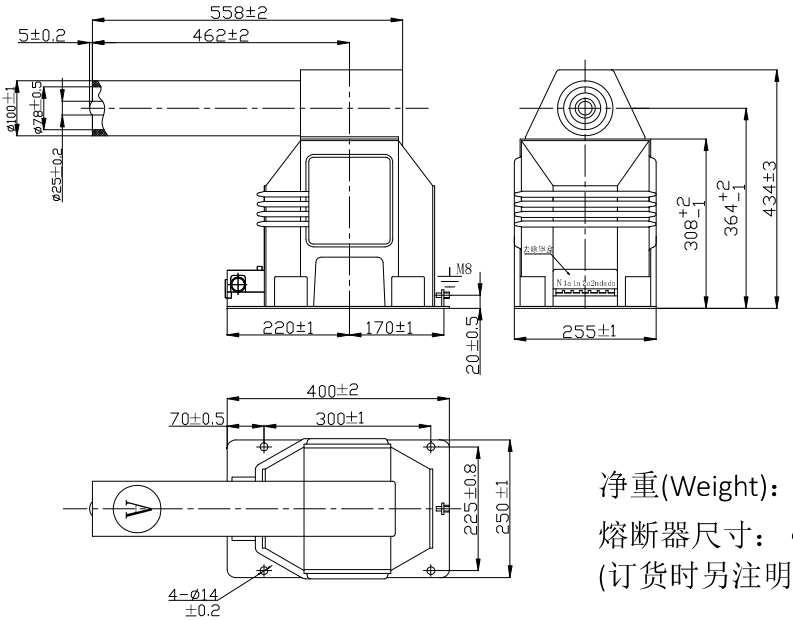

净重(Weight)：75kg

熔断器尺寸：Φ40mm×440mm

(订货时另注明，本体不配熔断器)

JDZJ9-27.5R 型电压互感器参见接线图 1，JDZJ9-35R 型电压互感器参见接线图 2-图 3

Type JDZJ9-27.5R，JDZJ9-35R voltage transformer see figure 1-figure 3

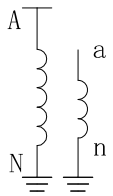

图 1

Figure 1

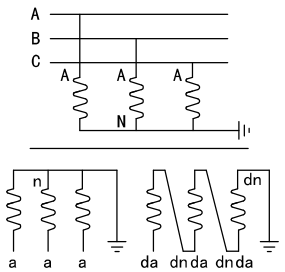

图 2

Figure 2

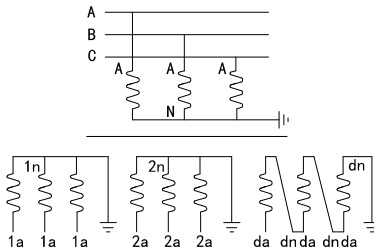

图 3

Figure 3

JDZJ10-35R, JDZJ10-27.5R 型电压互感器

型号 Type	电压比 Voltage ratio(V)	额定绝缘水平 Rated insulation(kV)	准确级及额定输出 Accuracy class and Rated output(VA)	极限输出 Max. output(VA)
JDZJ10-27.5R	27500/100	31.5/95/200	0.2-120 0.5-250	600
JDZJ10-35R	35000：√3/100：√3, 100:3	40.5/95/200	0.2/3P(6P)—50/100 0.5/3P(6P)—120/100 1.0/3P(6P)—250/100	600
	35000：√3/100：√3, 100：√3, 100:3		0.2/0.2/3P(6P)—20/20/100 0.2/0.5/3P(6P)—30/40/100 0.5/0.5/3P(6P)—60/60/100	600 (当有两个测量级时对应第一个测量级)

外形尺寸图
Overall dimensions

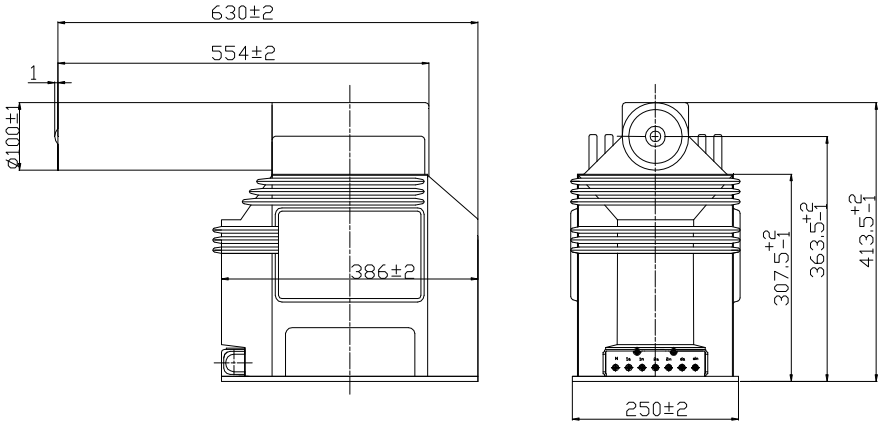

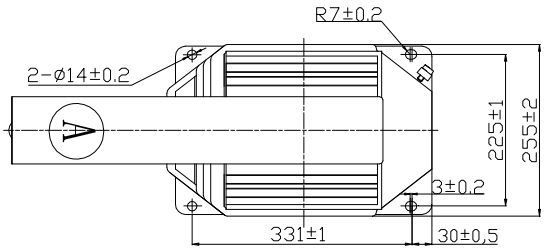

净重（Weight）：80kg
熔断器尺寸： Φ40mm×440mm
(订货时另注明，本体不配熔断器）

JDJZ10-27.5R 型电压互感器参见接线图 1，JDZJ10-35R 型电压互感器参见接线图 2-图 3
Type JDZJ10-27.5R, JDZJ10-35R voltage transformer see figure 1 - figure 3

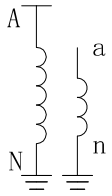

图 1
Figure 1

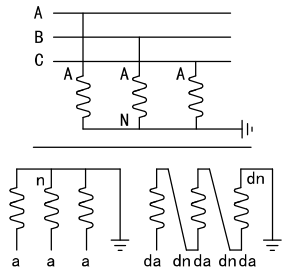

图 2
Figure 2

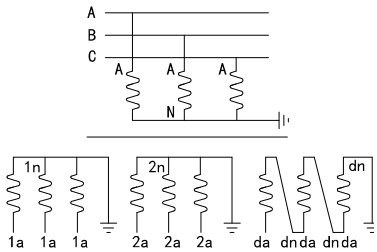

图 3
Figure 3

JDZJ11-35 电压互感器

型号 Type	电压比 Voltage ratio(V)	额定绝缘水平 Rated insulation(kV)	准确级及额定输出 Accuracy class and Rated output(VA)	极限输出 Max. output(VA)
JDZJ11-35	35000：√3/100：√3, 100:3	40.5/95/200	0.2/3P—45/100 0.2/6P—45/100 0.5/3P—100/100 0.5/6P—100/100 1.0/3P—200/100 1.0/6P—200/100	600 (注:当有两个测量级时对应第一个测量级)
	35000：√3/110：√3, 110:3	40.5/95/200		
	35000：√3/100：√3, 100：√3, 100:3	40.5/95/200	0.2/0.5/3P—30/30/100 0.2/0.5/6P—30/30/100	
	35000：√3/110：√3, 110：√3, 110:3	40.5/95/200		

外形尺寸图
Overall dimensions

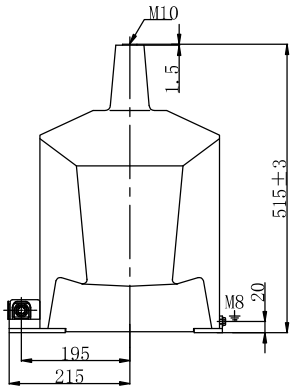

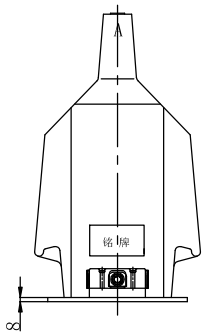

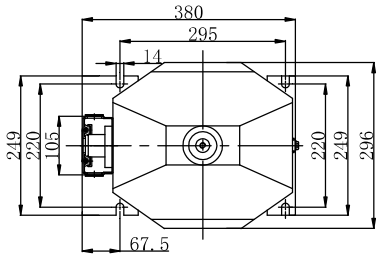

净重（Weight）：75kg

JDZJ11-35 型电压互感器参见接线图 1-图 2
Type JDZJ11-35 voltage transformer see figure1-figure2

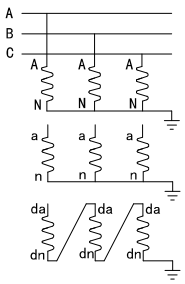

图 1
Figure1

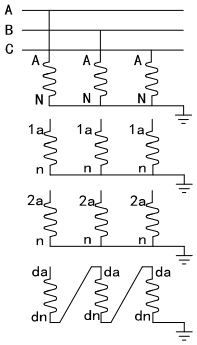

图 2
Figure2

JDZX9-35　电压互感器

型号 Type	电压比 Voltage ratio(V)	额定绝缘水平 Rated insulation(kV)	准确级及额定输出 Accuracy class and Rated output(VA)	极限输出 Max. output(VA)
JDZX9-35	35000：√3/100：√3, 100:3	40.5/95/200	0.2/3P—45/100 0.2/6P—45/100 0.5/3P—100/100 0.5/6P—100/100 1.0/3P—200/100 1.0/6P—200/100	600 （当有两个测量级时对应第一个测量级）
	35000：√3/110：√3, 110:3	40.5/95/200		
	35000：√3/100：√3, 100：√3, 100:3	40.5/95/200	0.2/0.5/3P—30/30/100 0.2/0.5/6P—30/30/100	
	35000：√3/110：√3, 110：√3, 110:3	40.5/95/200		

外形尺寸图
Overall dimensions

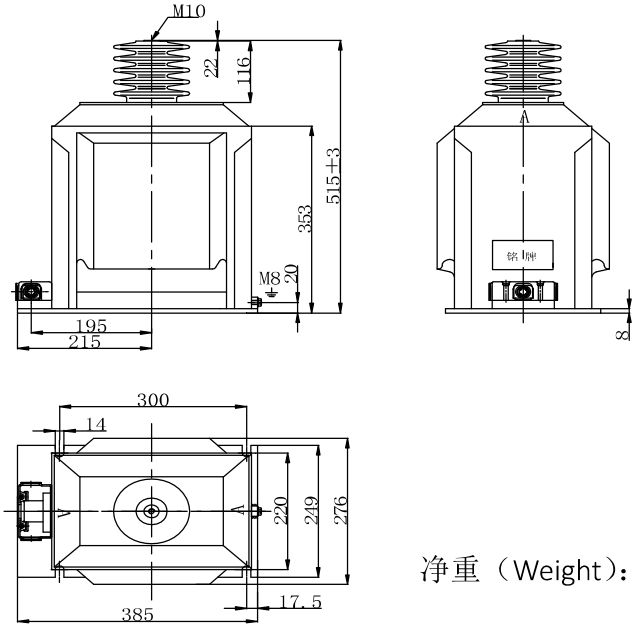

净重（Weight）：76kg

JDZX9-35 型电压互感器参见接线图 1-图 2
TypeJDZX9-35 voltage transformer see figure1-figure2

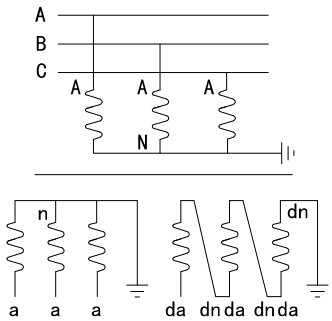

图 1
Figure1

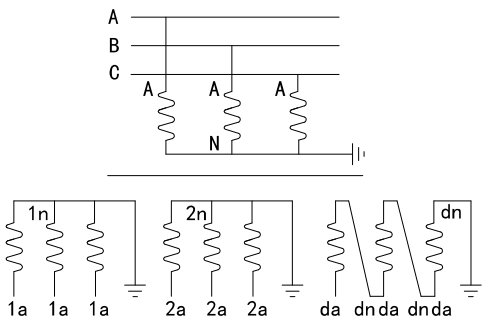

图 2
Figure2

三、500V 产品

AM1-0.5 电流互感器

额定一次电流 Rated primary current (A)	额定二次电流 Rated secondary current (A)	准确级组合 Accuracy classes combination	额定输出 Rated output (VA)
50	1/5	10P10/3	0.75/3
75/100/150	1/5	10P20/3	0.75/3
200/300/400	1/5	10P20/3	0.75/3

外形尺寸图 Overall dimensions

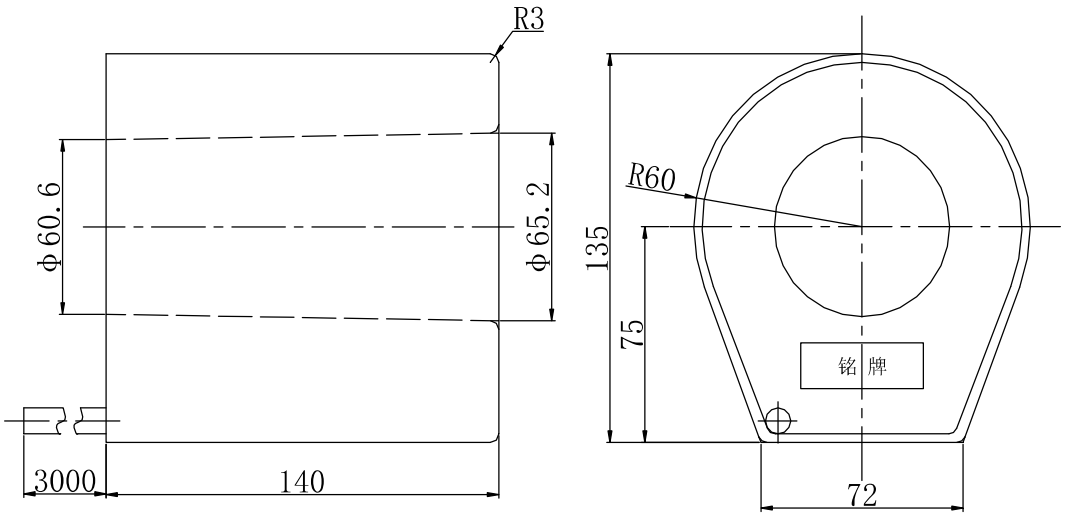

净重（Weight）：6kg

AM2-0.5 电流互感器

额定一次电流 Rated primary current (A)	额定二次电流 Rated secondary current (A)	准确级组合 Accuracy classes combination	额定输出 Rated output (VA)
100	1/5	10P10	1
150	1/5	10P10	1.5
200	1/5	10P10	2
300	1/5	10P10	3
400	1/5	10P10	4

外形尺寸图 Overall dimensions

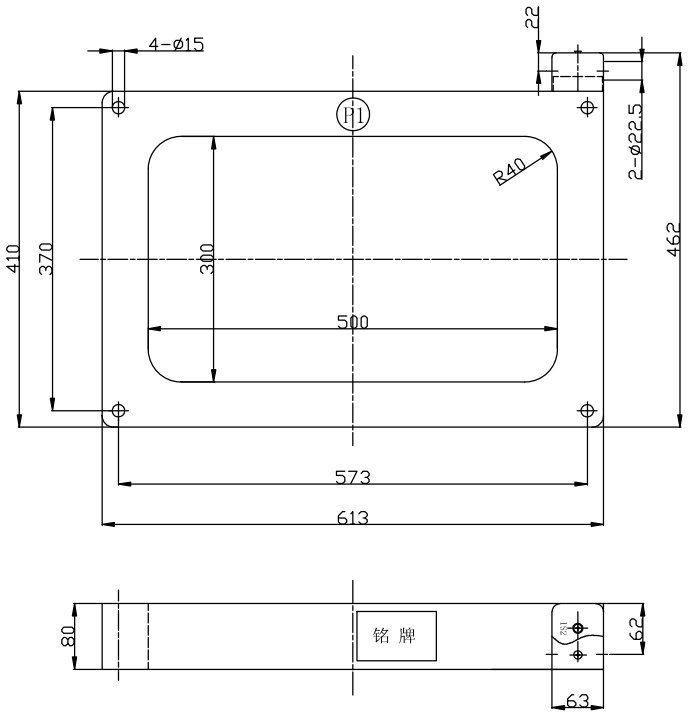

净重（Weight）：19kg

AM130/65-0.5CQ 电流互感器

电流比 Ratio	准确级组合 Accuracy classes combination	额定输出(VA) Rated output
300/1	0.2/10P10	2.5/1
	0.5S/10P10	2.5/1
	0.5/10P10	3.75/1
400/1	0.2/10P10	3.75/1
	0.5S/10P10	3.75/1
	0.5/10P10	5/1
300/5	0.2/10P10	2.5/1
	0.5S/10P10	2.5/1
	0.5/10P10	3.75/1
400/5	0.2/10P10	3.75/1
	0.5S/10P10	3.75/1
	0.5/10P10	5/1
500/5	0.2/10P10	3.75/1
	0.5S/10P10	3.75/1
	0.5/10P10	5/1
600/5	0.2/10P10	5/1
	0.5S/10P10	5/1
	0.5/10P10	7.5/1

外形尺寸图 Overall dimensions

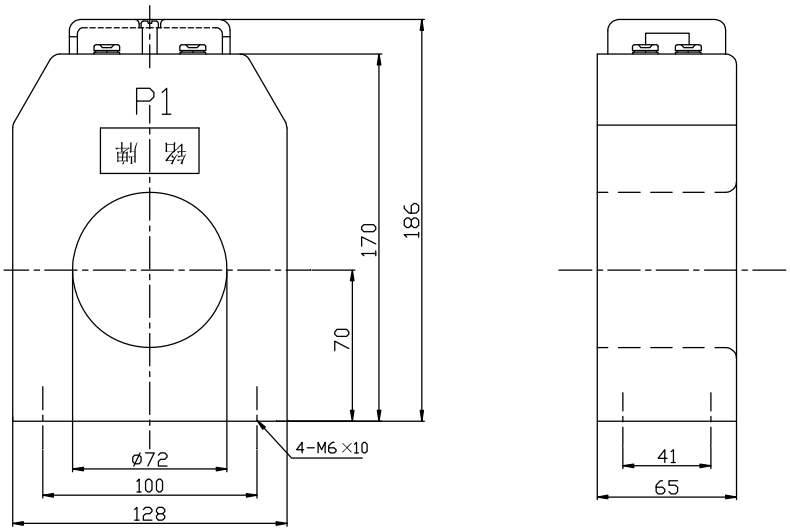

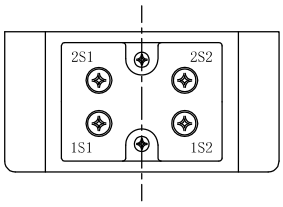

净重（Weight）：4.5kg

AM130(150)/80(120、180)-0.5CQ 电流互感器

型号 Type	电流比(A) Ratio	准确级组合 Accuracy classes combination	额定输出(VA) Rated secondary output
AM130/80-0.5CQ	100-400/5(1)	10P10	1-3.75
	100-400/5(1)	0.5	1.5-10
AM130/120-0.5CQ	50/1	10P10	1
	100-400/5(1)	10P10	1-7.5
	100-400/5(1)	0.5	1.5-10
AM130/180-0.5CQ	100/5	0.5/10P10	1/1
	100/1	0.5/10P10	2/2
	150/5	0.5/5P10	1.5/1.5
	150/1,200/5	0.5/5P10	2.5/2.5
	200/1,300/5	0.5/5P10	3.75/3.75
	300/1,400/5	0.5/5P10	5/5
	400/1	0.5/5P10	7.5/7.5
AM150/80-0.5CQ	50-100/1,100/5	10P10	1-2.5
	150-1250/5(1)	5P10	2.5-10
	100-1250/5(1)	0.5	1.5-15
AM150/120-0.5CQ	50-100/5(1)	10P10	1-5
	150/5	0.5/5P10	2.5/2.5
	150/1,200/5	0.5/5P10	3.75/3.75
	200/1,300/5	0.5/5P10	5/5
	300/1,400/5	0.5/5P10	7.5/7.5
	400-1250/5(1)	0.5/5P10	10/10
AM150/180-0.5CQ	50-100/5(1)	10P10	2.5-7.5
	150-1250/5(1)	0.5/5P10	5-15/5-15

外形尺寸图 Overall dimensions

型号 Type	A（mm）	B（mm）	C（mm）	D（mm）	重量 Weight（kg）
AM130/80-0.5CQ	128	100	80	56	5.5
AM130/120-0.5CQ	128	100	120	96	8.5
AM130/180-0.5CQ	128	100	180	156	12
AM150/80-0.5CQ	148	120	80	56	5.5
AM150/120-0.5CQ	148	120	120	96	10
AM150/180-0.5CQ	148	120	180	156	13.5

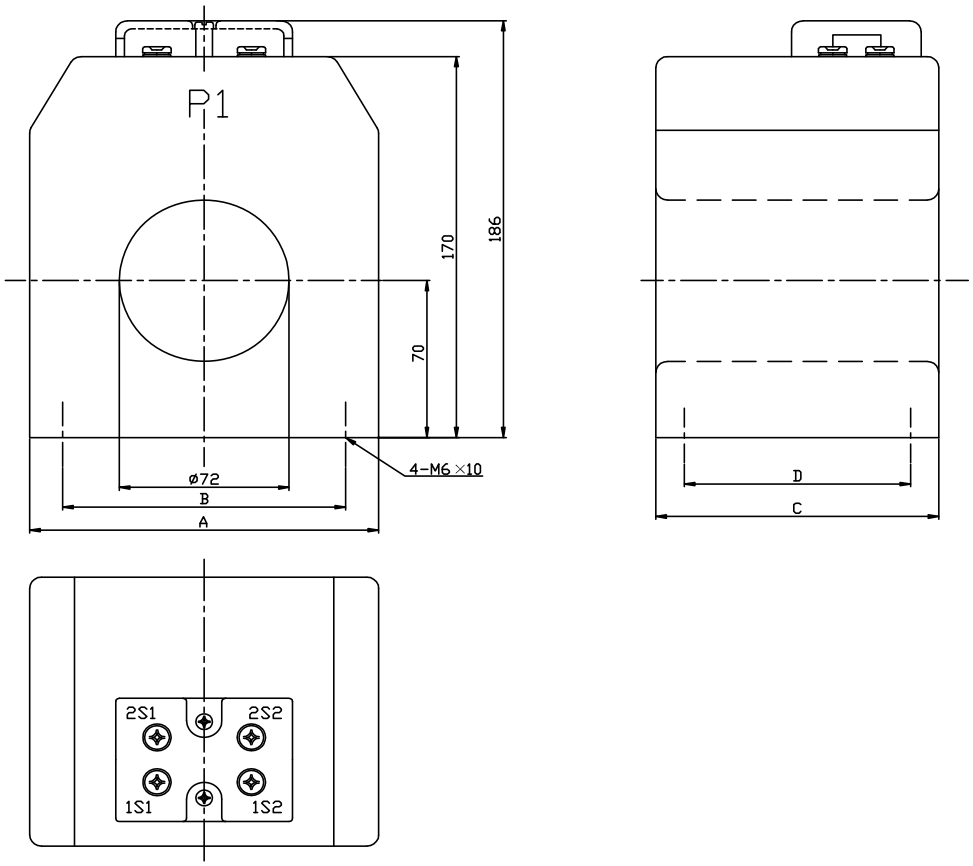
P1
170
186
70
4-M6×10
ø72
B
A
D
C
2S1
2S2
1S1
1S2

AM-0.5CQ 电流互感器

额定一次电流 Rated primary current (A)	额定二次电流 Rated secondary current (A)	准确级组合 Accuracy classes combination	额定输出 Rated secondary output (VA)
20	1	10P10	2.5
30			2.5
40			3.75
50			5
75			7.5
100	5/1	10P10	10
150			15
200			20
250			20
300			20

外形尺寸图 Overall dimensions

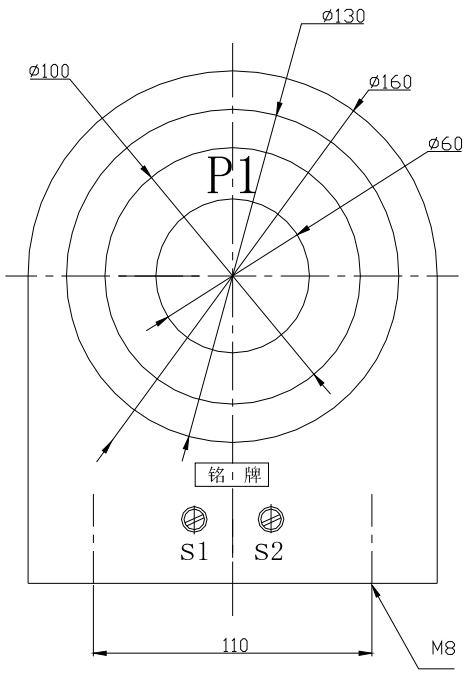

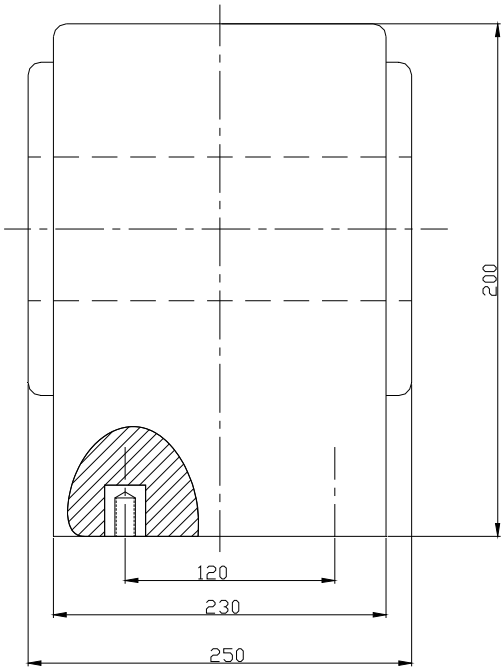

净重（Weight）：23kg

AMK2-0.5 电流互感器

额定一次电流(A) Rated primary current	额定二次电流 Rated secondary current (A)	准确级/额定输出(VA) Accuracy classes/ Rated output				
		0.5	1.0	3.0	10P5	10P10
100	1/5			2		
150	1/5			2		
200	1/5		2.5	2.5	2.5	
300	1/5		5	5	2.5	
400	1/5		5	5	5	2
500	1/5	5	7.5	7.5	7.5	5
600	1/5	5	10	10	10	5
750	1/5	10	10	10	10	5
800	1/5	10	10	10	10	5

一次电流导线选用高压单芯电力电缆，其导线截面从 50mm²-400mm²，外径适用范围 φ28-φ42mm；用户可选择二次出线为软导线或接线柱。

外形尺寸图 Overall dimensions

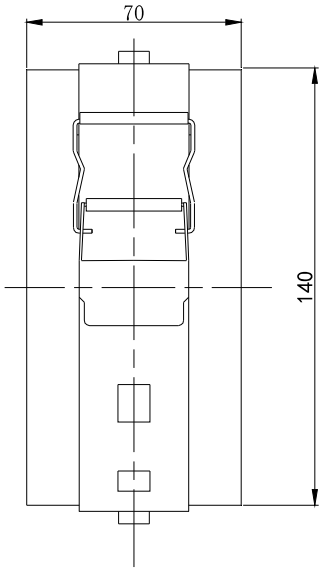

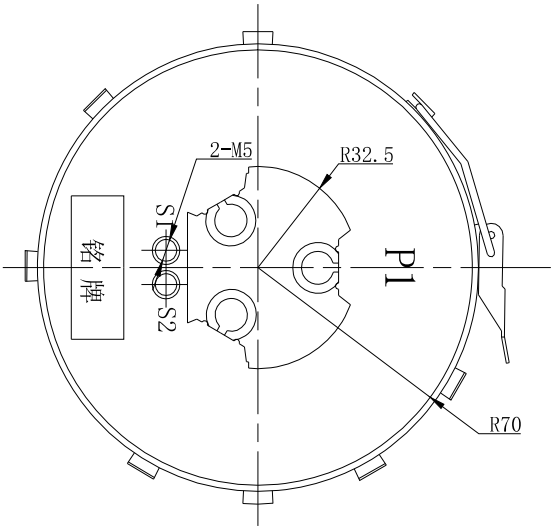

净重（Weight）：1.5kg

AMK3-0.5 电流互感器

额定电流比(A) Rated transformation ratio	准确级 Accuracy classes	额定输出(VA) Rated output
300/1	1	3
300/5	1	2.5
400/1	1	3
400/5	1	3
600/1	0.5	3
600/5	0.5	3
800/1	0.5	3
800/5	0.5	3

一次电流导线选用高压单芯电力电缆，其导线截面从 50mm²-400mm²，外径适用范围 φ28-φ42mm；用户可选择二次出线为软导线或接线柱。

外形尺寸图 Overall dimensions

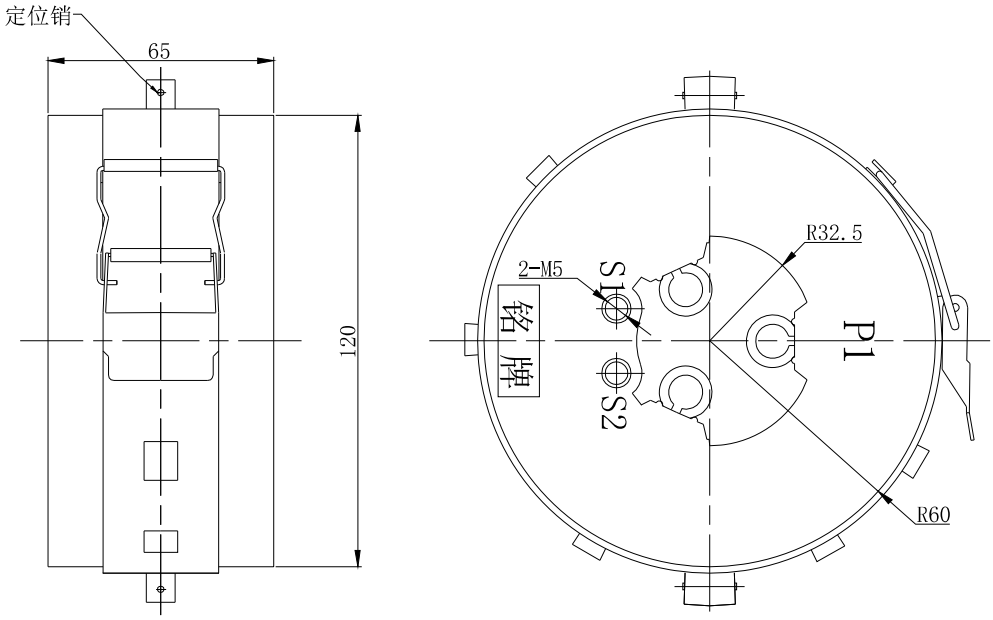

净重（Weight）：1.5kg

AMK-0.5 电流互感器

额定电流比(A) Rated transformation ratio	准确级/额定输出(VA) Accuracy classes/ Rated output				
	0.5	1.0	3.0	5	10
100/1				2.5	2.5
150/1			2.5	2.5	
200/1		2.5	2.5	2.5	
300/1		2.5	2.5	2.5	
400/1	2.5	2.5	2.5		
500/1	2.5	2.5	2.5		
600/1	2.5	2.5	2.5		
750/1	2.5	2.5	2.5		
800/1	2.5	2.5	2.5		

额定电流比(A) Rated transformation ratio	准确级/额定输出(VA) Accuracy classes/ Rated output				
	0.5	1.0	3.0	5	10
100/5					2.5
150/5				2.5	
200/5			5	5	
300/5			5	5	
400/5	2.5	5	5		
500/5	2.5	5	5		
600/5	5	5			
750/5	5	5			
800/5	5	5			

一次电流导线选用高压单芯电力电缆，其导线截面从 50mm²-400mm²，外径适用范围 φ28-φ42mm；用户可选择二次出线为软导线或接线柱。

外形尺寸图 Overall dimensions

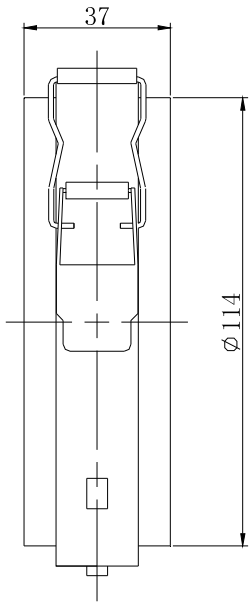

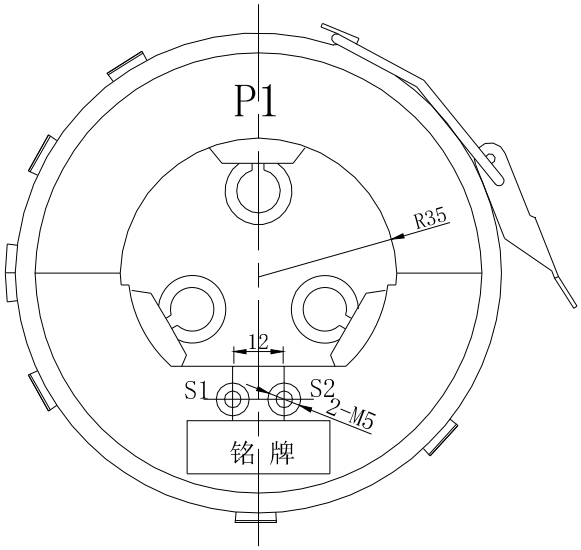

净重（Weight）：0.7kg

AMY2-0.5 电流互感器

额定一次电流 Rated primary current (A)	额定二次电流 Rated secondary current (A)	准确级组合 Accuracy classes combination	额定输出 Rated output (VA)
400	1/5	0.5	5
600	1/5	0.5	5
600	1/5	0.2	5

外形尺寸图 Overall dimensions

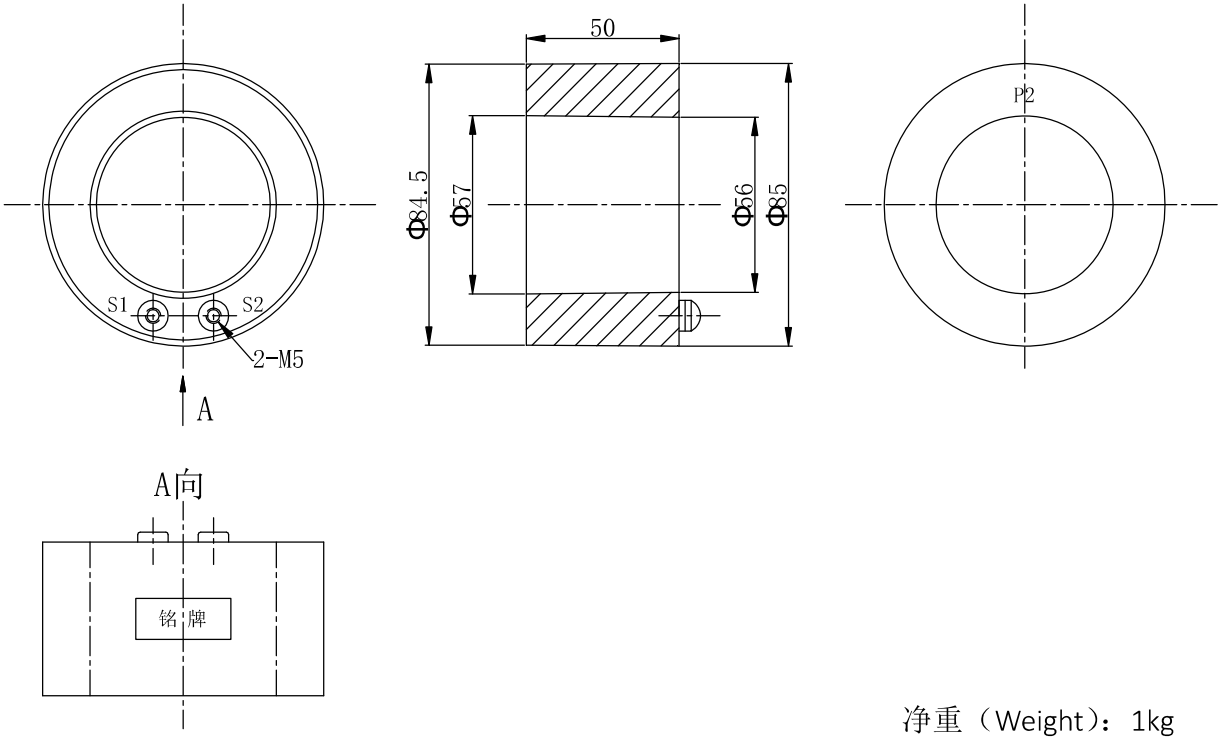

净重（Weight）：1kg

AMY-0.5 电流互感器

型号	AMY-0.5W2	AMY-0.5W3	AMY-0.5W4	AMY-0.5W5
额定一次电流（A）	14.4-57.6	28.8-115.2	57.6-230.4	115.2-460.8
额定二次电流（A）	0.075-0.3(S1,S2 绕组),0.288-1.152(C,D 绕组)			
准确及组合	10P80 EXTD.1000%	5P80 EXTD.1000%		
负荷（VA）	0.1			

外形尺寸图 Overall dimensions

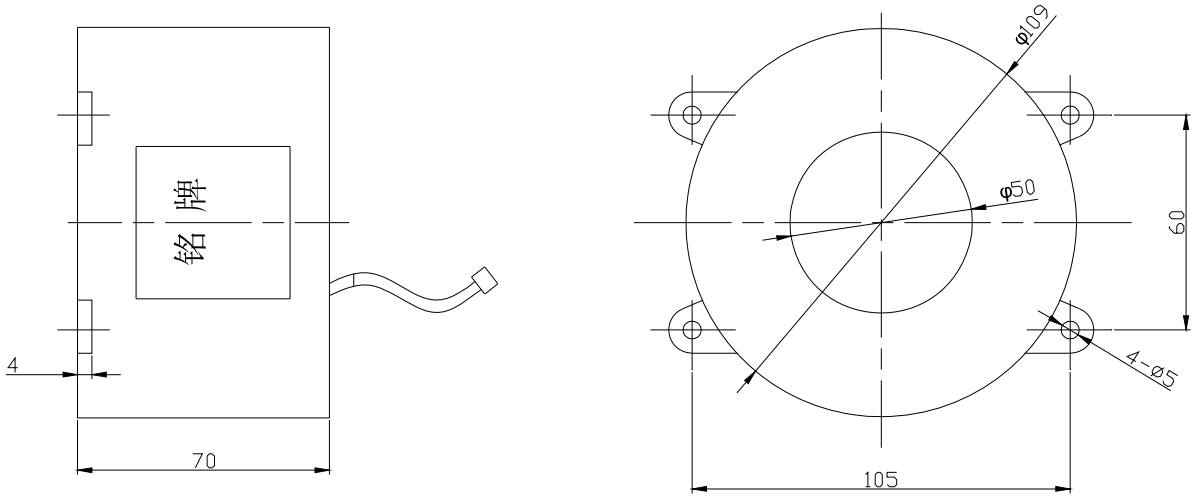

净重（Weight）：2.22kg

AMZ1-0.5 电流互感器

型号	AMZ1-0.5W2	AMZ1-0.5W3	AMZ1-0.5W4	AMZ1-0.5W5
额定一次电流(A)	14.4-57.6	28.8-115.2	57.6-230.4	115.2-460.8
额定二次电流(A)	0.075-0.3(S1,S2 绕组)，0.288-1.152(C,D 绕组)			
准确级组合	10P80 EXTD.1000%	5P80 EXTD.1000%		
负荷(VA)	0.1			

外形尺寸图 Overall dimensions

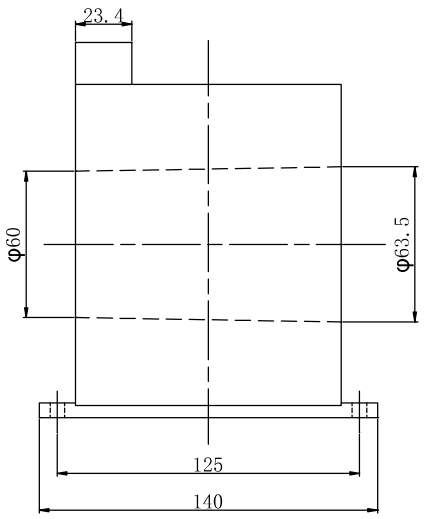

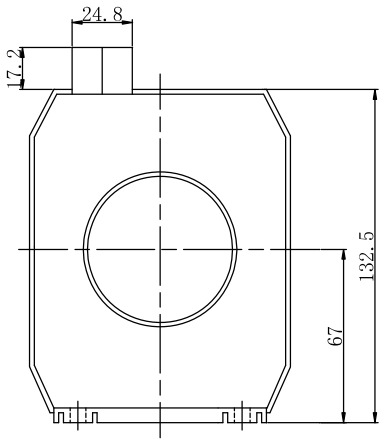

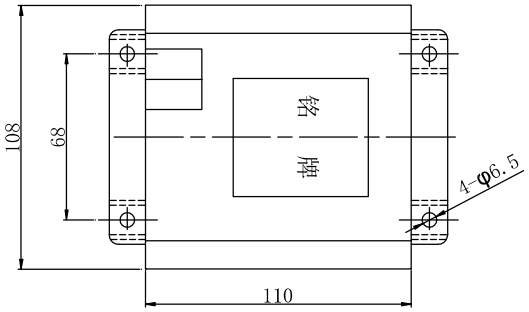

净重（Weight）：3kg

AMZ-0.5 电流互感器

型号	AMZ-0.5W2	AMZ-0.5W3	AMZ-0.5W4	AMZ-0.5W5
额定一次电流(A)	14.4-57.6	28.8-115.2	57.6-230.4	115.2-460.8
额定二次电流(A)	0.075-0.3(S1,S2 绕组)，0.288-1.152(C,D 绕组)			
准确级组合	10P80 EXTD.1000%	5P80 EXTD.1000%		
负荷(VA)	0.1			

外形尺寸图 Overall dimensions

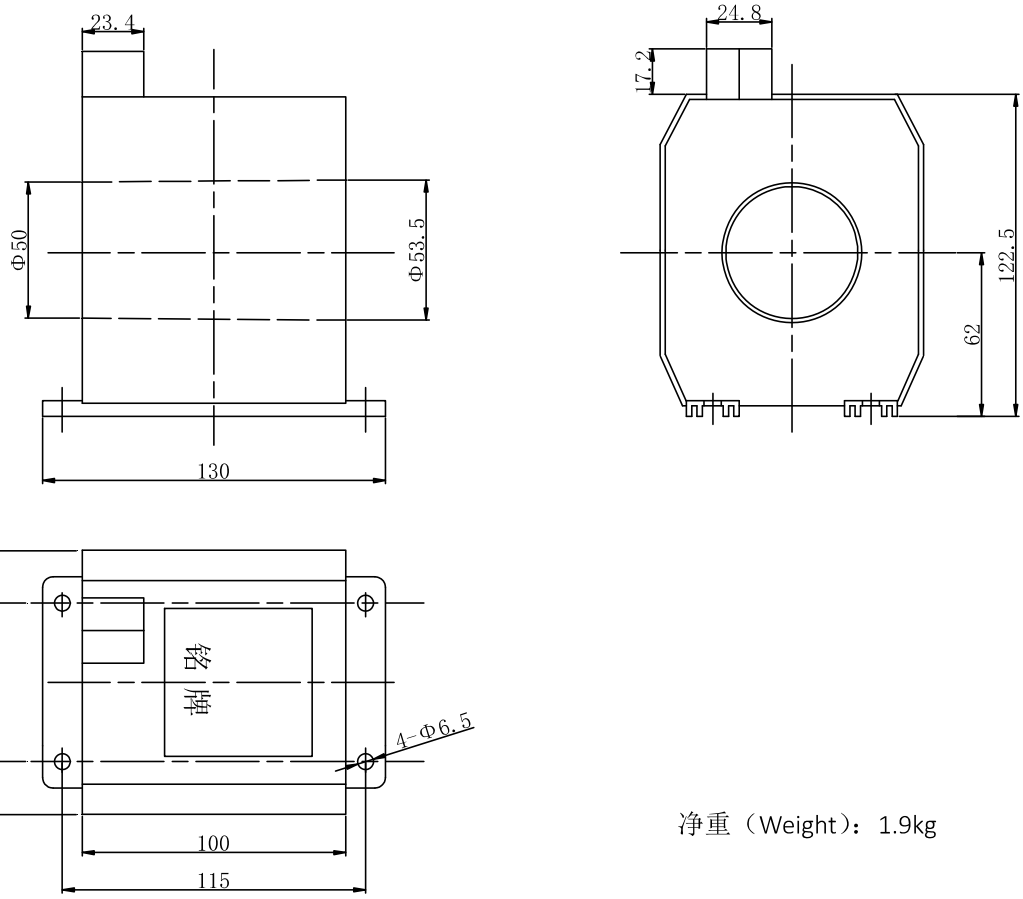

净重（Weight）：1.9kg

ASG100/38(42, 50, 60)A(B, C, F)电流互感器

外形尺寸图 Overall dimensions

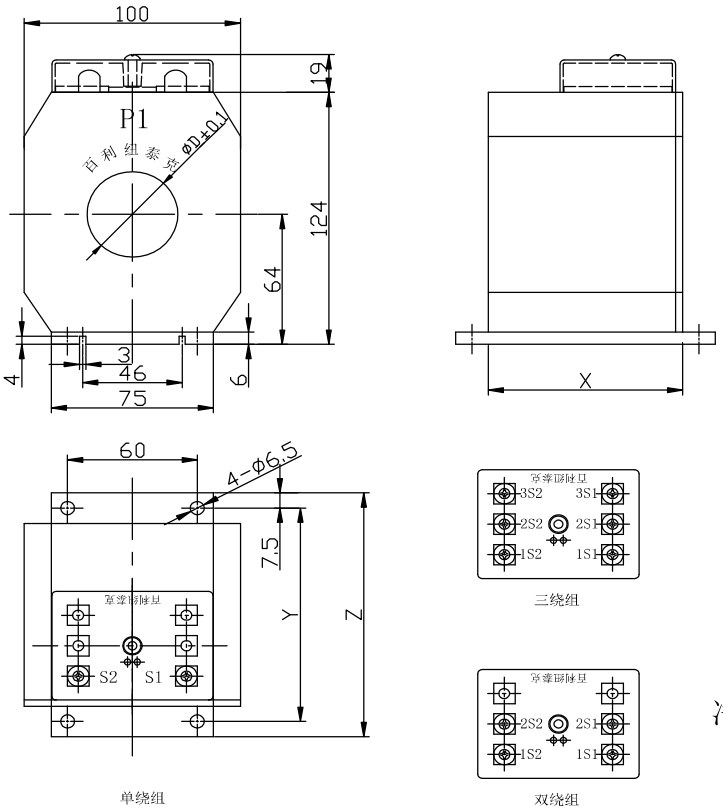

净重（Weight）：2-6.5kg

16	ASG100/60F	60	210	225	240
15	ASG100/60C	60	120	135	150
14	ASG100/60B	60	90	105	120
13	ASG100/60A	60	60	75	90
12	ASG100/50F	50	210	225	240
11	ASG100/50C	50	120	135	150
10	ASG100/50B	50	90	105	120
9	ASG100/50A	50	60	75	90
8	ASG100/42F	42	210	225	240
7	ASG100/42C	42	120	135	150
7	ASG100/42B	42	90	105	120
5	ASG100/42A	42	60	75	90
4	ASG100/38F	38	210	225	240
3	ASG100/38C	38	120	135	150
2	ASG100/38B	38	90	105	120
1	ASG100/38A	38	60	75	90
序号	型号	ΦD (mm)	X (mm)	Y (mm)	Z (mm)

GSA115/35(50,60,70)A（B,C）电流互感器

外形尺寸图 Overall dimensions

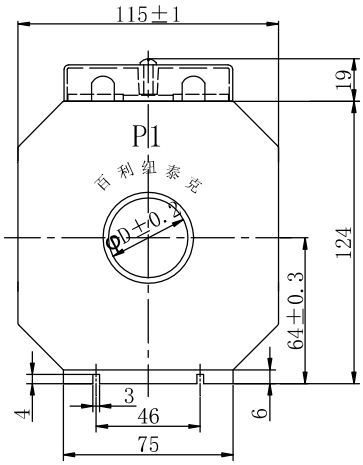

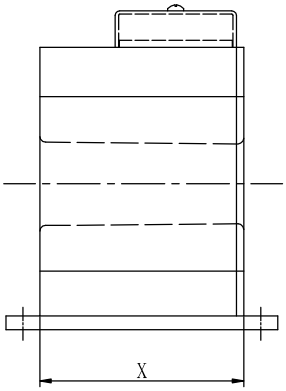

序号	型　号	φD	X	Y	Z
12	GSA115/70C	70	170	185	200
11	GSA115/70B	70	120	135	150
10	GSA115/70A	70	80	95	110
9	GSA115/60C	60	170	185	200
8	GSA115/60B	60	120	135	150
7	GSA115/60A	60	80	95	110
6	GSA115/50C	50	170	185	200
5	GSA115/50B	50	120	135	150
4	GSA115/50A	50	80	95	110
3	GSA115/35C	35	170	185	200
2	GSA115/35B	35	120	135	150
1	GSA115/35A	35	80	95	110

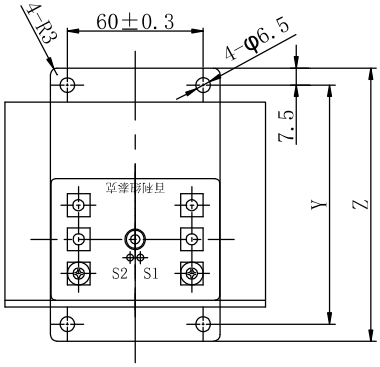

单绕组

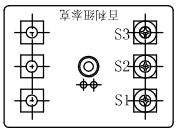

单绕组抽头

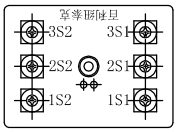

三绕组

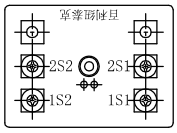

双绕组

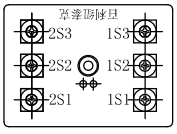

双绕组抽头

净重（Weight）：2.5-4.5kg

JDG-0.5 电压互感器

额定电压(V) Rated transformation ratio (A)	准确级及额定输出(VA) cosϕ=0.8 Accuracy class and rated output		
	0.5	1	3
220/100	25	40	100
380/100	25	40	100
380/220	25	40	100
400/100	25	40	100
440/100	25	40	100
500/100	30	50	100
600/100	30	50	100

外形尺寸图 Overall dimensions

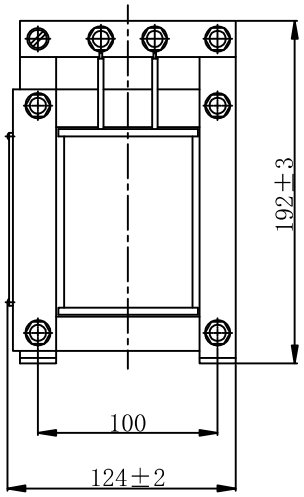

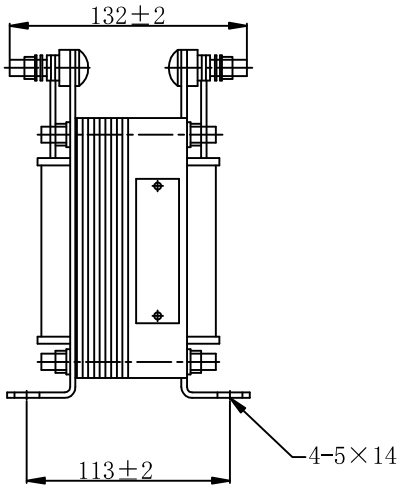

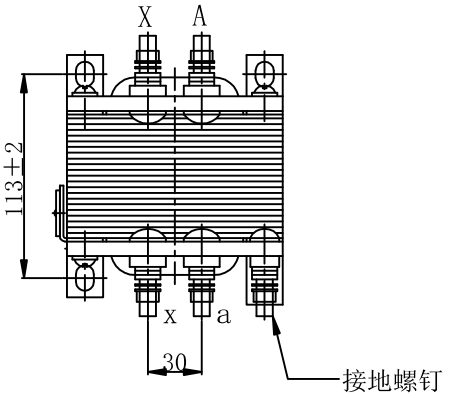

净重（Weight）：7.2kg

LFZ1D 电流互感器

额定电流比 Rated current ratio(A)	准确级/额定输出(VA) Accuracy classes/Rated output(VA)	
	0.5	0.5S
50	1	
75	2.5	
100	2.5	2.5

外形尺寸图 Overall dimensions

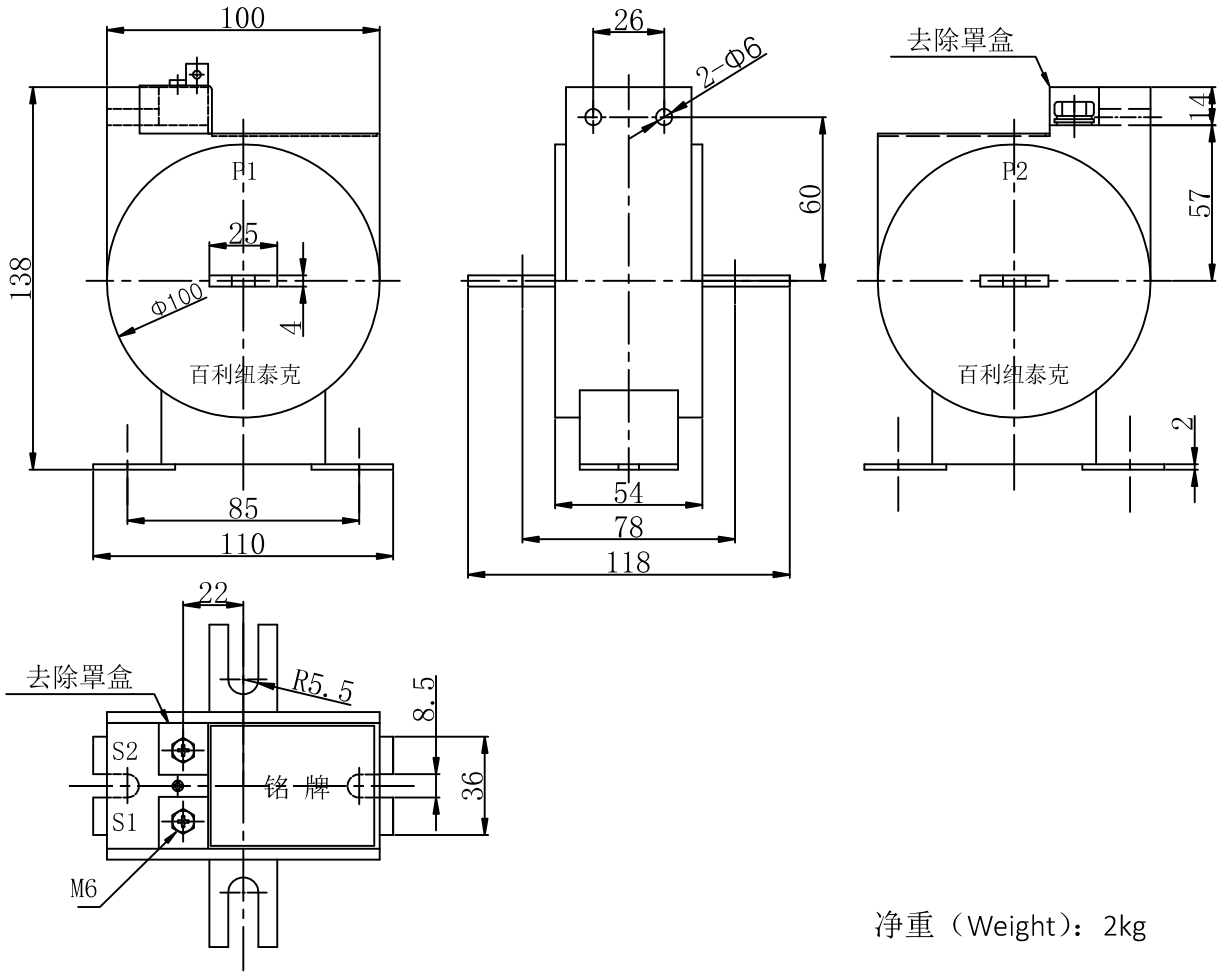

净重（Weight）：2kg

LJ-2, 4, 7 零序电流互感器

型号 Type	允许穿过电缆根数 Turns of cable	二次总阻抗（Ω） Total secondary resistance	与互感器联系的继电器型号 Type of relay	继电器整流电流（A） Starting current of replay	保护灵敏度(A) Protection sensitivity	工频试验电压（kV） Power-frequency test voltage
LJ-2	1-2	≤10	DL11/60	0.03	1-3	3
LJ-4	3-4					
LJ-7	5-7					

外形尺寸图 Overall dimensions

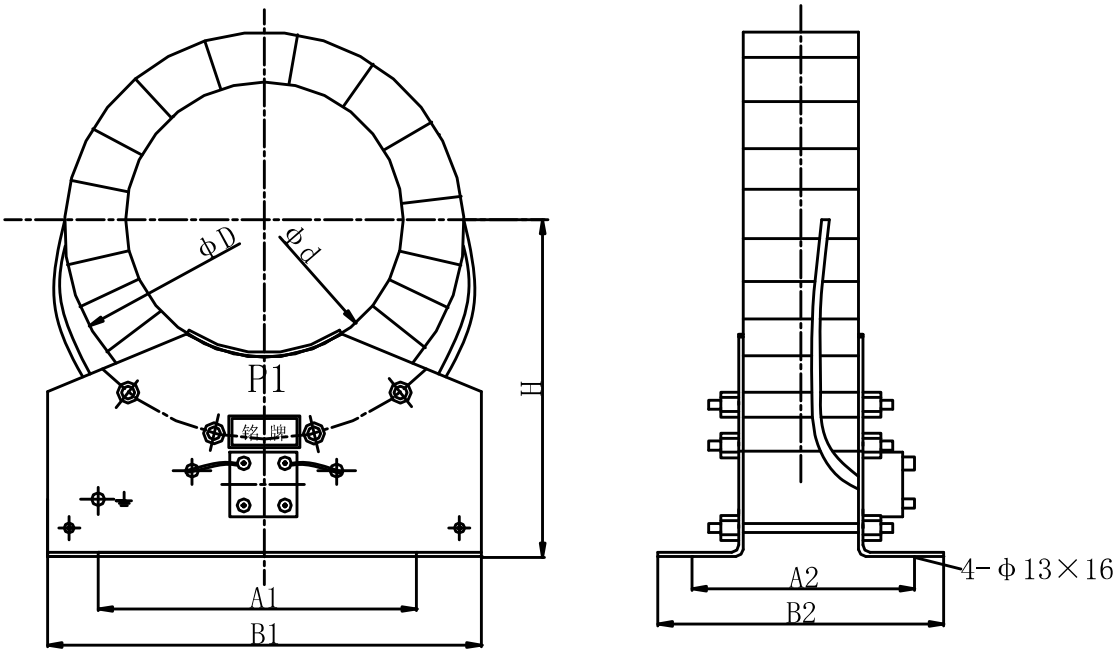

型号 Type	ΦD	Φd	A1	A2	B1	B2	H	重量（kg） Weight
LJ-2	230	110	150	155	200	195	195	11
LJ-4	285	140	220		280		217	16
LJ-7	310	185	220		300		235	19

LJ-φ75 零序电流互感器

与互感器联系的继电器的形式 Type of relay	继电器的使用刻度(A) Measuring scale of relay	继电器的启动电流(A) Starting current of relay	互感器的二次回路总阻抗(Ω) Total resistance of secondary loop
DL11/0.2	0.1-0.2	0.1	～10

外形尺寸图 Overall dimensions

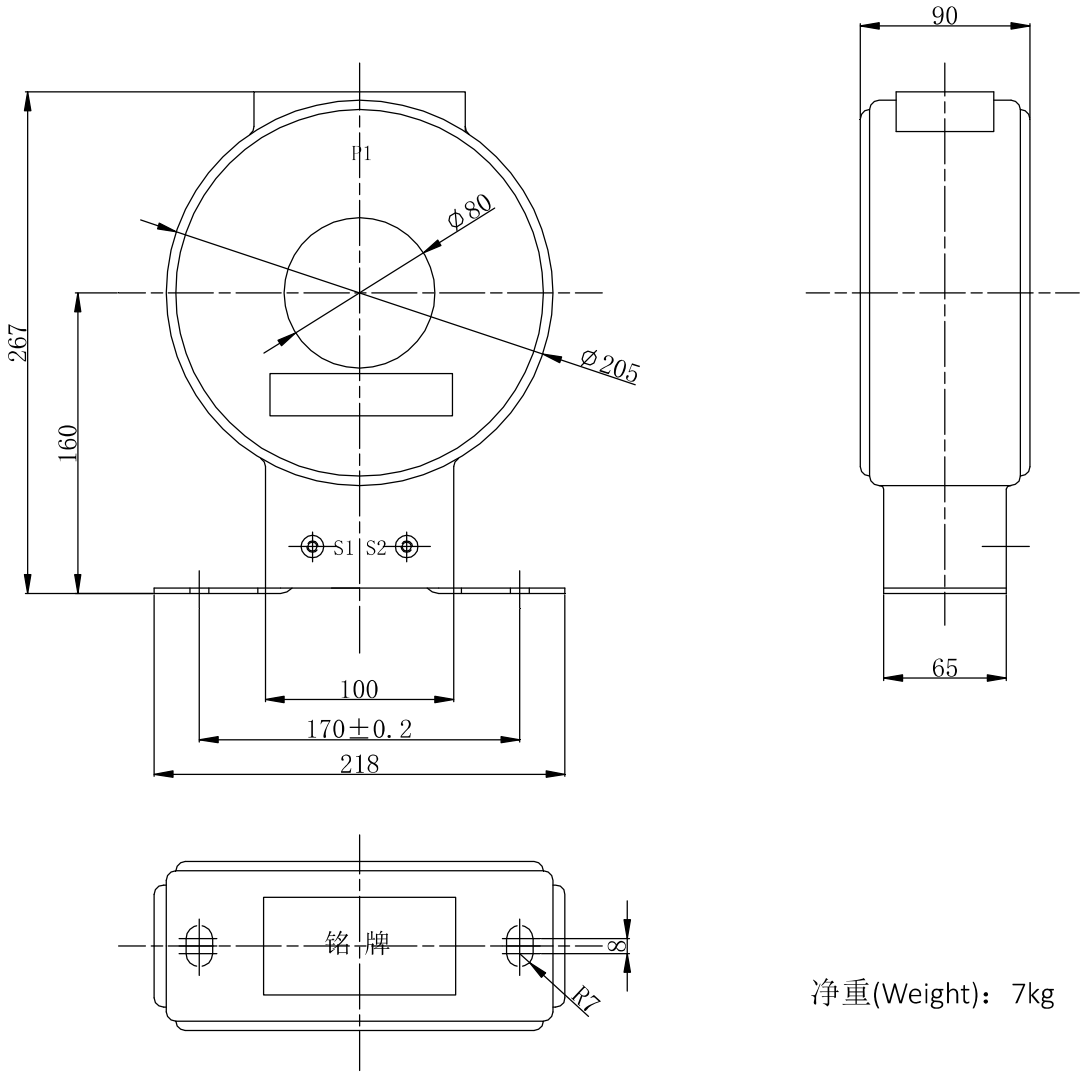

净重(Weight)：7kg

LMZ1D 电流互感器

额定电流比 Rated current ratio(A)	准确级/额定输出(VA) Accuracy classes/Rated output(VA)		
	0.5	0.5S	0.2
100/1 100/5	3.75	2.5	
150/1 150/5	5	5	3.75
200/1 200/5	7.5	7.5	5

外形尺寸图 Overall dimensions

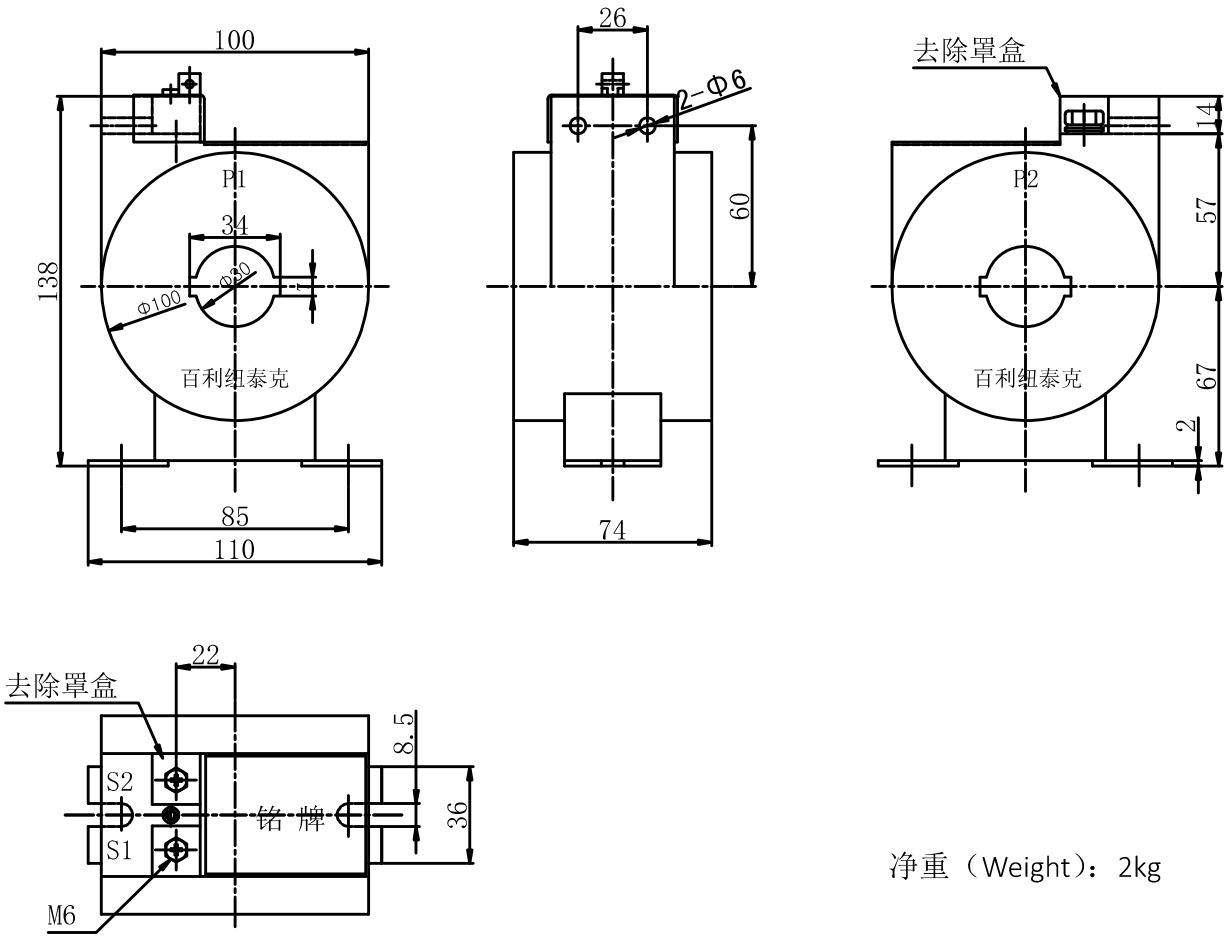

净重（Weight）：2kg

LMZ2D 电流互感器

额定电流比 Rated current ratio(A)	准确级/额定输出(VA) Accuracy classes/Rated output(VA)			
	0.5	0.5S	0.2	0.2S
300/1　300/5	3.75	3.75	3.75	
400/1　400/5	5	5	5	2.5

外形尺寸图 Overall dimensions

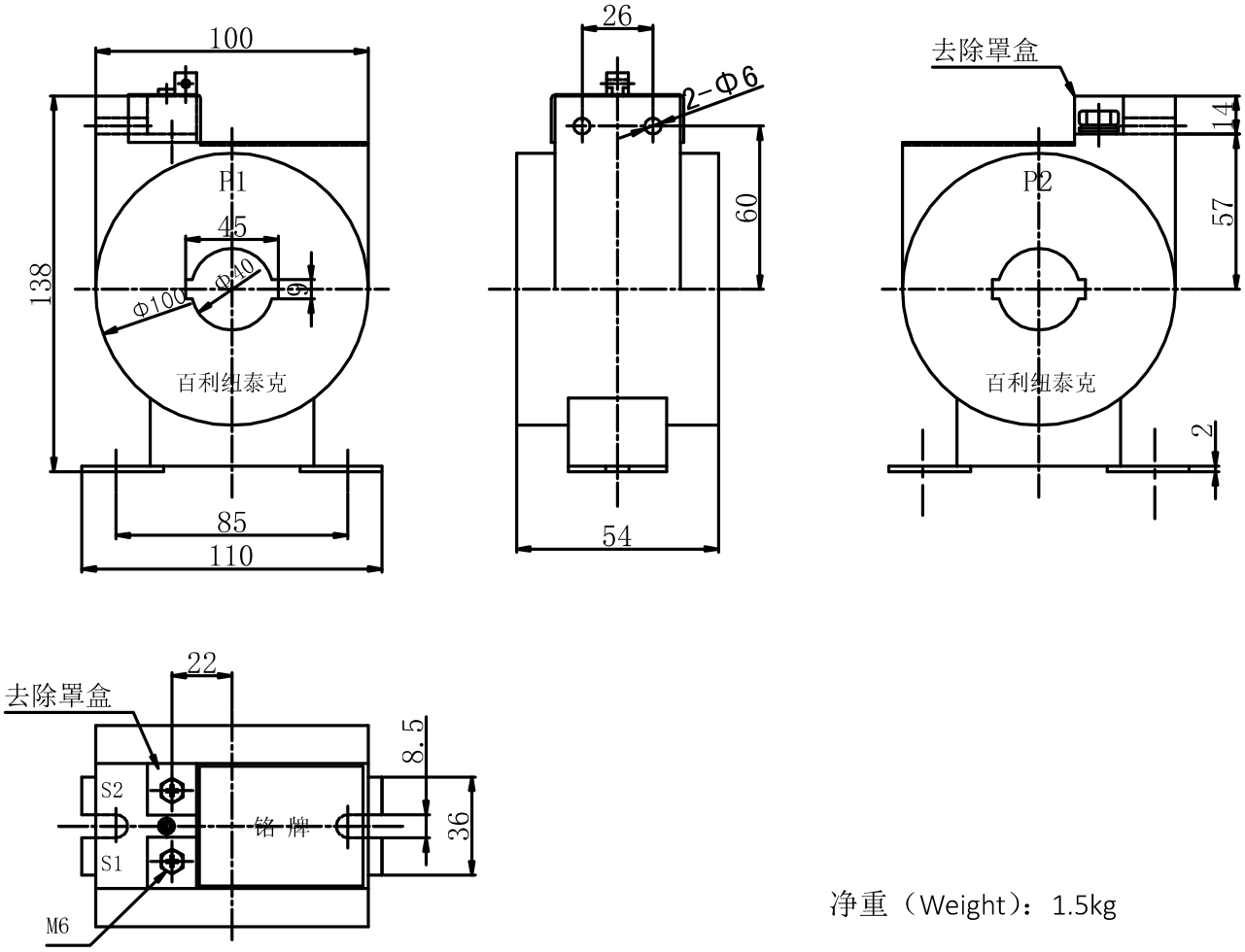

净重（Weight）：1.5kg

LMZ3D 电流互感器

额定电流比 Rated current ratio(A)	准确级/额定输出(VA) Accuracy classes/Rated output(VA)	
	0.5	0.5S
600/1 600/5	2.5	1
800/1 800/5	3.75	2.5

外形尺寸图 Overall dimensions

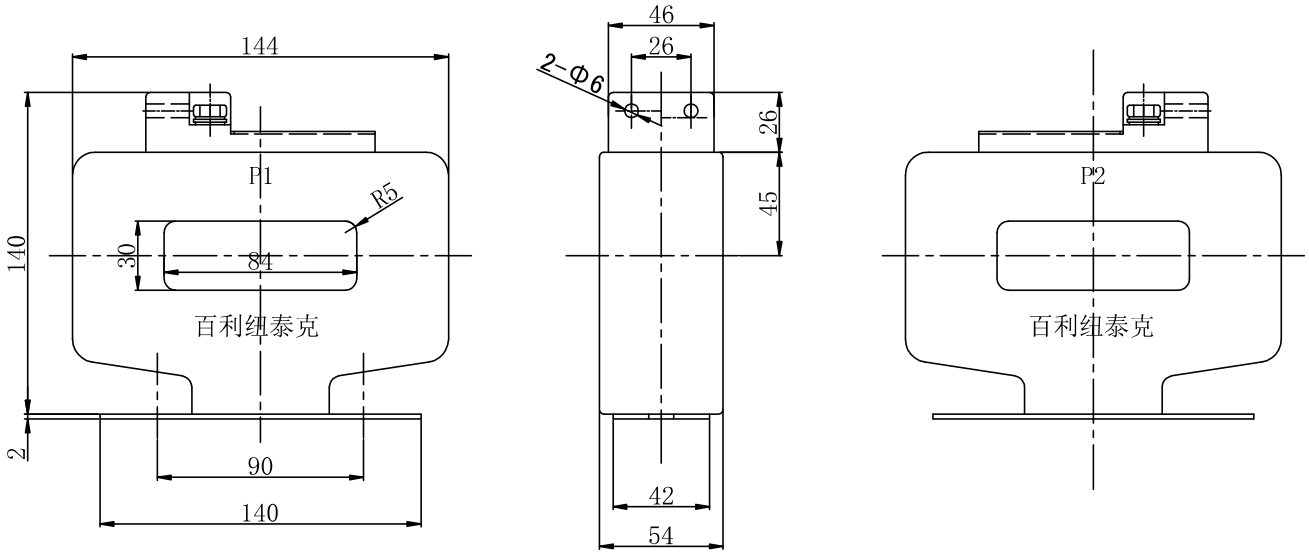

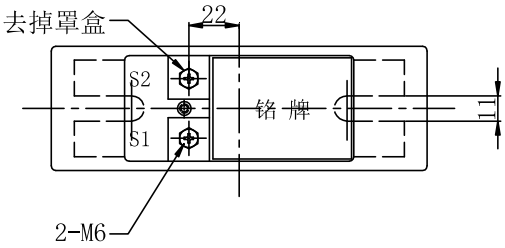

净重（Weight）：1.5kg

LMZ4D 电流互感器

额定电流比 Rated current ratio(A)	准确级/额定输出(VA) Accuracy classes/Rated output(VA)	
	0.5	0.5S
800/1　800/5	3.75	2.5
1000/1　1000/5	5	3.75

外形尺寸图 Overall dimensions

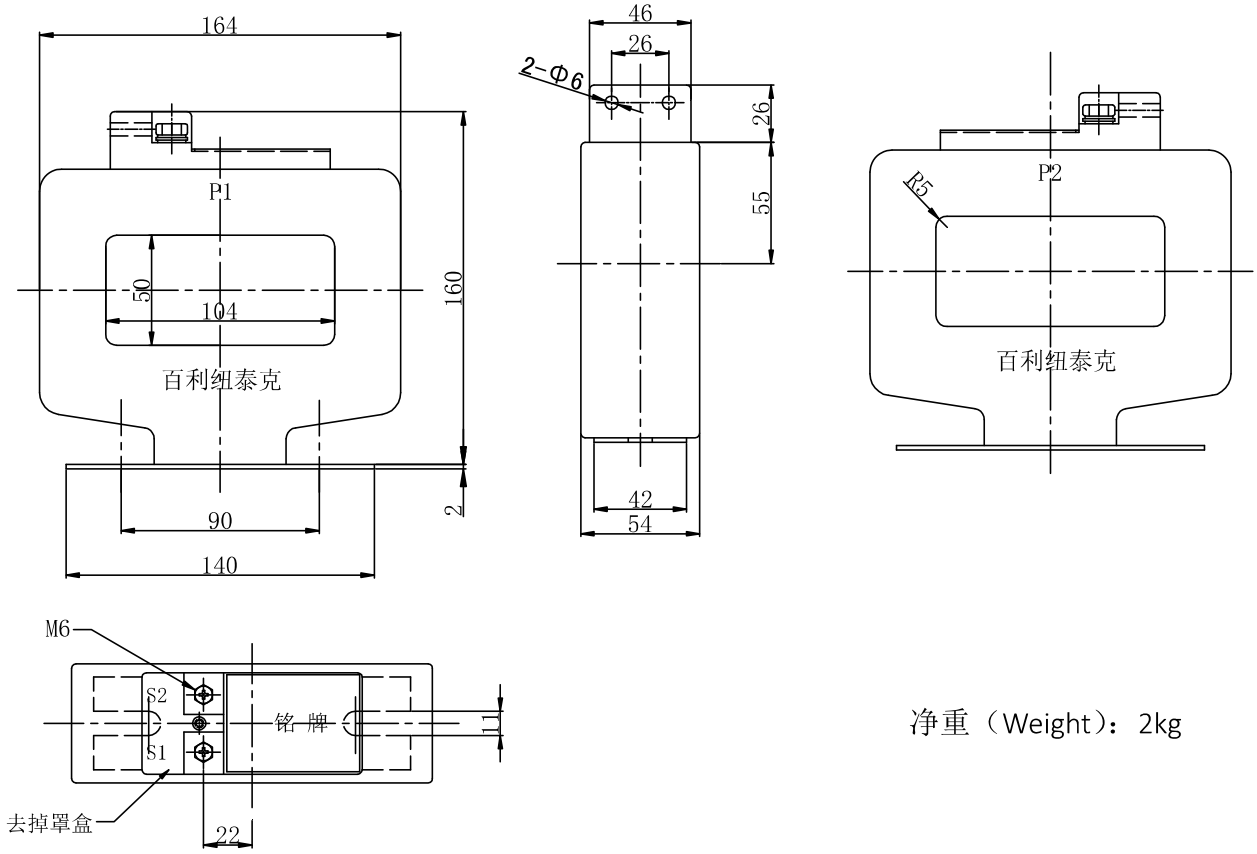

净重（Weight）：2kg

LMZ(J)1-0.5 电流互感器

型号 Type	变比 Current ratio	孔径 Aperture	参数 Data（只能选择一个准确级）					
			准确级 Accuracy class	容量 (VA) rated output	准确级 Accuracy class	容量(VA) rated output	准确级 Accuracy class	容量 (VA) rated output
LMZ1-0.5	10-100/5	出排式	0.5	5	0.5S/0.2	5-3.75	0.2S	5-3.75
	75/5	Φ30	0.5	2.5	0.5S/0.2	2.5	0.2S	2.5
	100/5	Φ30	0.5	5-3.75	0.5S/0.2	5-3.75	0.2S	2.5
	150/5	Φ30	0.5	5-3.75	0.5S/0.2	5-3.75	0.2S	5-3.75
	200/5	Φ30	0.5	5-3.75	0.5S/0.2	5-3.75	0.2S	5-3.75
	250/5	Φ30	0.5	5-3.75	0.5S/0.2	5-3.75	0.2S	5-3.75
	300/5	Φ35	0.5	5-3.75	0.5S/0.2	5-3.75	0.2S	5-3.75
	400/5	Φ35	0.5	5-3.75	0.5S/0.2	5-3.75	0.2S	5-3.75
	400/5	Φ45	0.5	5-3.75	0.5S/0.2	5-3.75	0.2S	5-3.75
LMZJ1-0.5	500/5	Φ40(55×10)	0.5	10	0.5S/0.2	5-3.75	0.2S	5-3.75
	600/5	Φ40(55×10)	0.5	10	0.5S/0.2	5-3.75	0.2S	5-3.75
	750/5	Φ50(63×11)	0.5	10	0.5S/0.2	5-3.75	0.2S	5-3.75
	800/5	Φ50(63×11)	0.5	10	0.5S/0.2	5-3.75	0.2S	5-3.75
	1000/5	100×50	0.5	15	0.5S/0.2	10	0.2S	10
	1200/5	100×50	0.5	15	0.5S/0.2	10	0.2S	10
	1250/5	100×50	0.5	15	0.5S/0.2	10	0.2S	10
	1500/5	100×50	0.5	15	0.5S/0.2	10	0.2S	10
	2000/5	138×70	0.5	20	0.5S/0.2	15	0.2S	10
	2500/5	138×70	0.5	20	0.5S/0.2	15	0.2S	10
	3000/5	138×70	0.5	20	0.5S/0.2	15	0.2S	10
	3500/5	138×70	0.5	20	0.5S/0.2	20	0.2S	10
	4000/5	138×70	0.5	20	0.5S/0.2	20	0.2S	10
	4500/5	138×70	0.5	20	0.5S/0.2	20	0.2S	10
	5000/5	138×70	0.5	20	0.5S/0.2	20	0.2S	10
LMZ1-0.5	10-100/1	出排式	0.5	5-3.75	0.5S/0.2	5-3.75	0.2S	5-3.75
	100/1	Φ30	0.5	5-3.75	0.5S/0.2	5-3.75	0.2S	5-3.75
	150/1	Φ30	0.5	5-3.75	0.5S/0.2	5-3.75	0.2S	5-3.75
	200/1	Φ30	0.5	5-3.75	0.5S/0.2	5-3.75	0.2S	5-3.75
	250/1	Φ30	0.5	5-3.75	0.5S/0.2	5-3.75	0.2S	5-3.75
	300/1	Φ35	0.5	5-3.75	0.5S/0.2	5-3.75	0.2S	5-3.75
	350/1	Φ35	0.5	5-3.75	0.5S/0.2	5-3.75	0.2S	5-3.75
	400/1	Φ35	0.5	5-3.75	0.5S/0.2	5-3.75	0.2S	5-3.75
	450/1	Φ35	0.5	5-3.75	0.5S/0.2	5-3.75	0.2S	5-3.75

型号 Type	变比 Current ratio	孔径 Aperture	参数 Data（只能选择一个准确级）					
			准确级 Accuracy class	容量 (VA) rated output	准确级 Accuracy class	容量(VA) rated output	准确级 Accuracy class	容量 (VA) rated output
LMZJ1-0.5	500/1	Φ40(55×10)	0.5	10	0.5S/0.2	5-3.75	0.2S	5-3.75
	600/1	Φ40(55×10)	0.5	10	0.5S/0.2	5-3.75	0.2S	5-3.75
	750/1	Φ50(63×11)	0.5	10	0.5S/0.2	5-3.75	0.2S	5-3.75
	800/1	Φ50(63×11)	0.5	10	0.5S/0.2	5-3.75	0.2S	5-3.75
	850/1	Φ50(63×11)	0.5	10	0.5S/0.2	5-3.75	0.2S	5-3.75
	1000/1	100×50	0.5	15	0.5S/0.2	10	0.2S	10
	1200/1	100×50	0.5	15	0.5S/0.2	10	0.2S	10
	1500/1	100×50	0.5	15	0.5S/0.2	10	0.2S	10
	2000/1	138×70	0.5	20	0.5S/0.2	20	0.2S	10
	2500/1	138×70	0.5	20	0.5S/0.2	20	0.2S	10
	3000/1	138×70	0.5	20	0.5S/0.2	20	0.2S	10
	3500/1	138×70	0.5	20	0.5S/0.2	20	0.2S	10
	4000/1	138×70	0.5	20	0.5S/0.2	20	0.2S	10
	4500/1	138×70	0.5	20	0.5S/0.2	20	0.2S	10
	5000/1	138×70	0.5	20	0.5S/0.2	20	0.2S	10

外形尺寸图 Overall dimensions

型号 规格	H	h	D	d	B	X	O	铭牌尺寸	图示
LMZ(J)1-0.5 Φ30	114	68	89	30	44	/	/	46.5×25	图一
LMZ(J)1-0.5 Φ30加大	120	70	95	30	48	/	/	50×30	图一
LMZ(J)1-0.5 Φ35	118	69	91	35	46	/	/	46.5×25	图一
LMZ(J)1-0.5 Φ45	120	69	93	45	46	/	/	46.5×25	图一
LMZ(J)1-0.5 Φ40	126	72	98	40	47	10	55	46.5×25	图二
LMZ(J)1-0.5 Φ50	135	78	110	50	48	11	63	46.5×25	图二

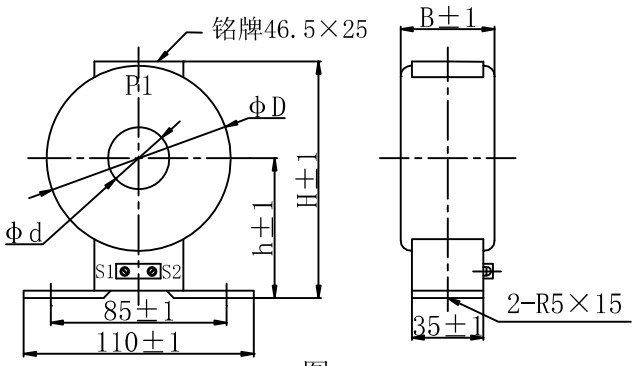

图一

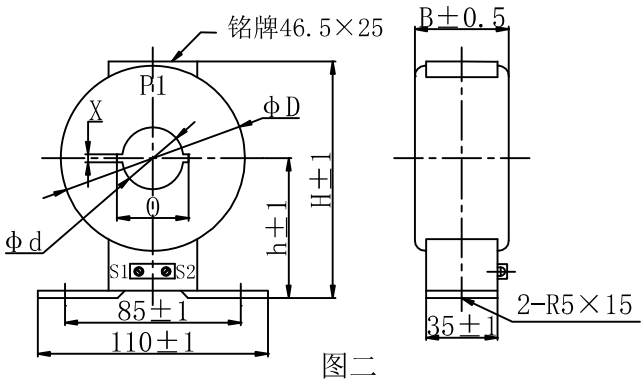

图二

型号	H	h	B	A1	A2	F	L1	L2	图示
LMZ(J)1-0.5 100×50	151	90	36	170	100	50	146	120	图三
LMZ(J)1-0.5 138×70	180	103	42	213	138	70	178	152	图三

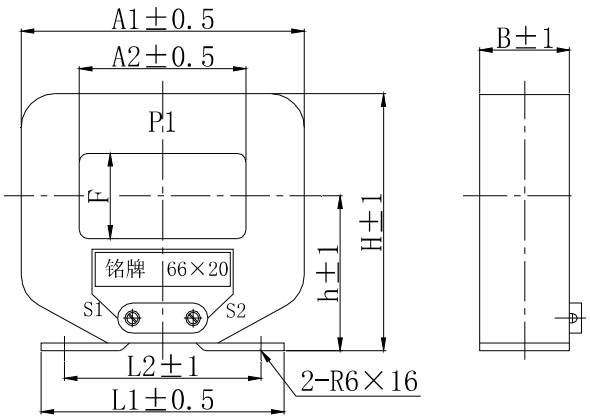

图三

注：1.孔径尺寸误差+2.5mm；
2.罩盒外形尺寸：长49，宽21，高11。

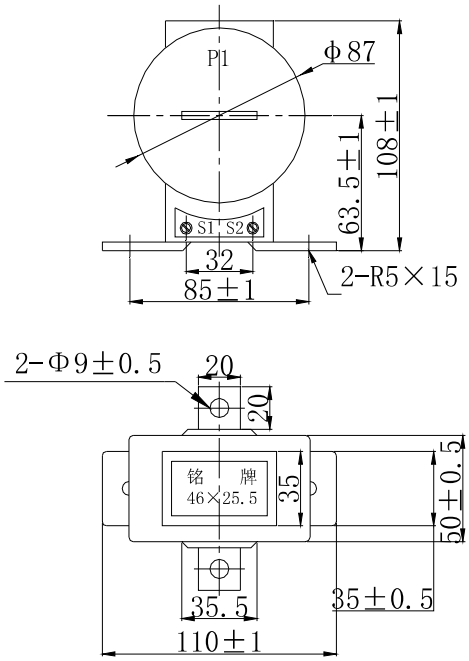

图四
LMZ1-0.5(LMZ2-0.66) 出排式

净重(Weight)：0.8-6kg

LMZB2-0.5 电流互感器

额定一次电流 Rated primary current (A)	额定二次电流 Rated secondary current (A)	准确级组合 Accuracy classes combination	额定输出 Rated output(VA)
240	1/5	1.0	2.5
300	1/5	1.0	2.5
400～500	1/5	0.5	5
600～800	1/5	0.5	10
1000～2000	1/5	0.5	15
240	1/5	10P20	2.5
300～500	1/5	10P20	5
600～1200	1/5	10P20	7.5
1000～1500	1/5	10P20	15
2000	1/5	10P20	25

外形尺寸图 Overall dimensions

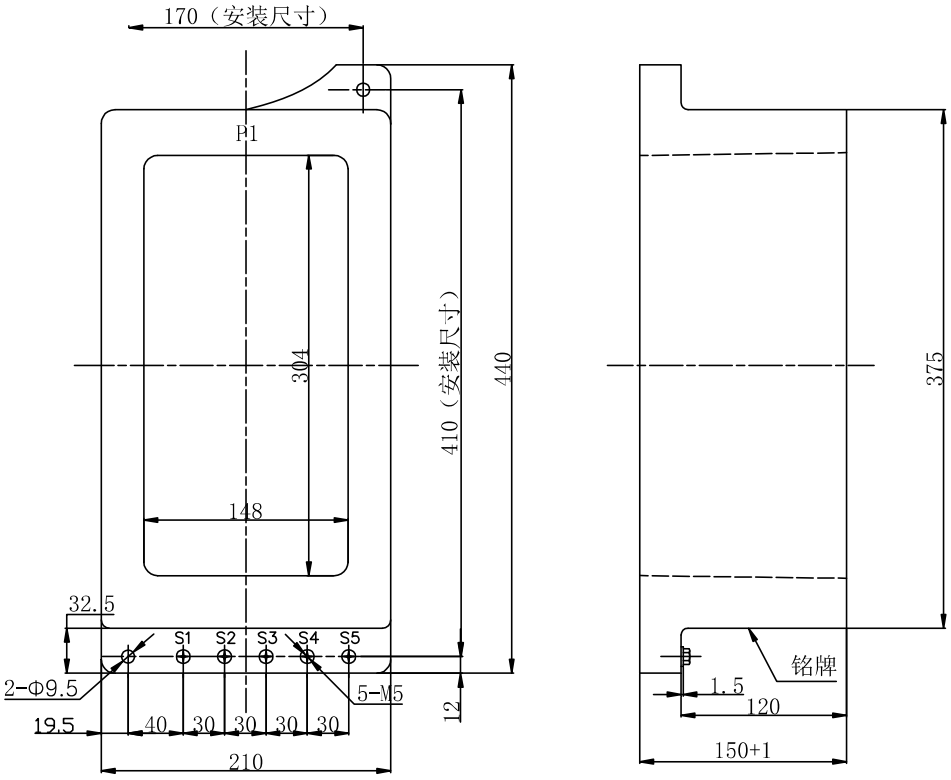

净重（Weight）：17.5kg

LMZB3-0.5 电流互感器

额定一次电流 Rated primary current (A)	额定二次电流 Rated secondary current (A)	准确级组合 Accuracy classes combination	额定输出 Rated output(VA)
240	1/5	1.0	2.5
300	1/5	1.0	5
400～500	1/5	0.5	10
	1/5	0.2	5
600～800	1/5	0.5	15
	1/5	0.2	10
1000～2000	1/5	0.5	15
	1/5	0.2	15
240	1/5	10P20	2.5
300～500	1/5	10P20	5
600～1200	1/5	10P20	7.5
1000～1500	1/5	10P20	15
2000～3150	1/5	10P20	20
4000(/5A)	5	10P20	20

外形尺寸图 Overall dimensions

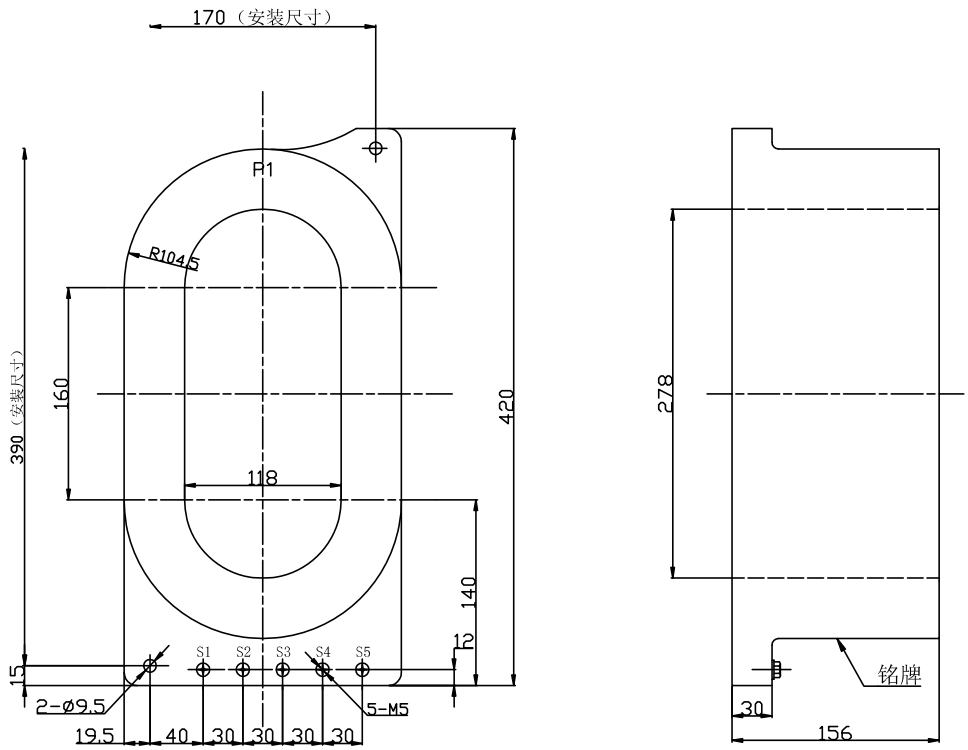

净重（Weight）：18.5kg

LMZBC-0.5 零序电流互感器

额定一次电流 Rated primary current (A)	额定二次电流 Rated secondary current (A)	准确级组合 Accuracy classes combination	额定输出 Rated output(VA)
200	1/5	10P20	1
300	1/5	10P20	2
400	1/5	10P20	2
500	1/5	10P20	3.75
600	1/5	10P20	5
800	1/5	10P20	5

外形尺寸图 Overall dimensions

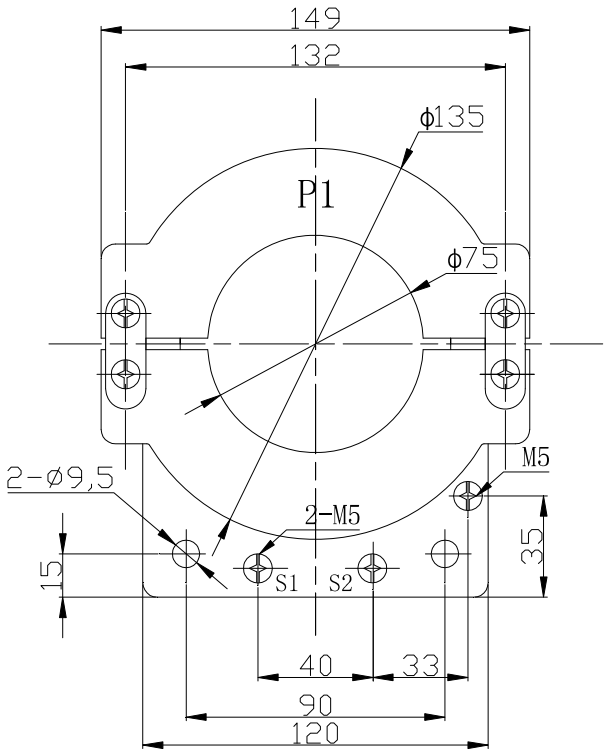

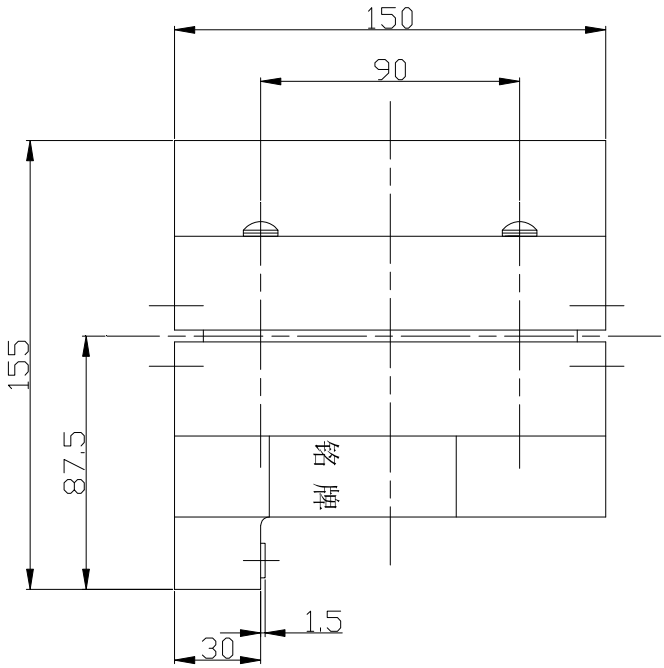

净重（Weight）：10kg

LMZC2-0.5b 整体式零序电流互感器

额定一次电流 Rated primary current (A)	额定二次电流 Rated secondary current (A)	准确级组合 Accuracy classes combination	额定输出 Rated output(VA)
100	1/5	10P10	5
150	1/5	10P10	7.5
200	1/5	10P10	15
300	1/5	10P10	20
400	1/5	10P10	20

外形尺寸图 Overall dimensions

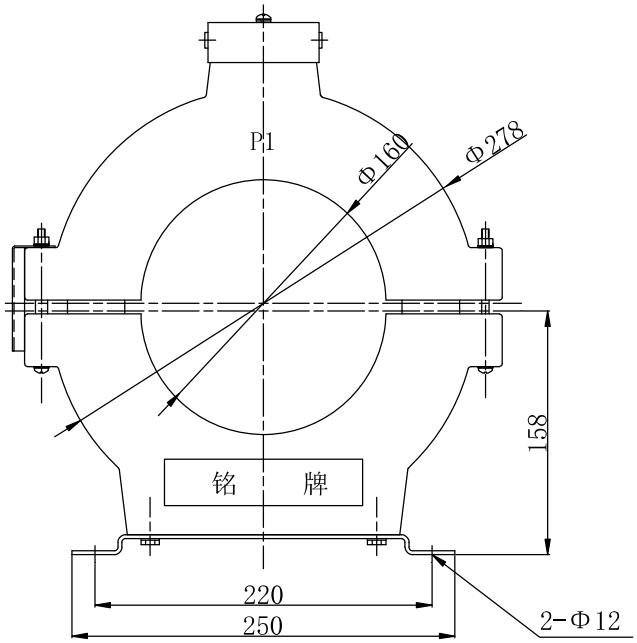

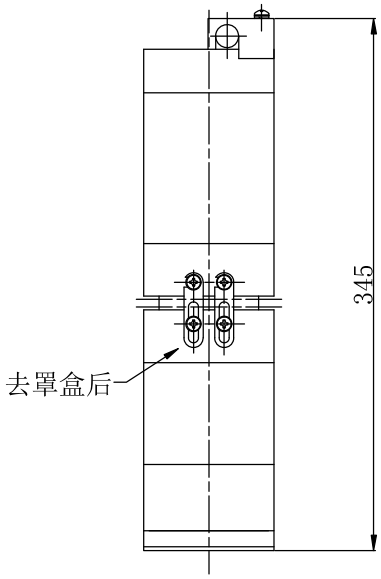

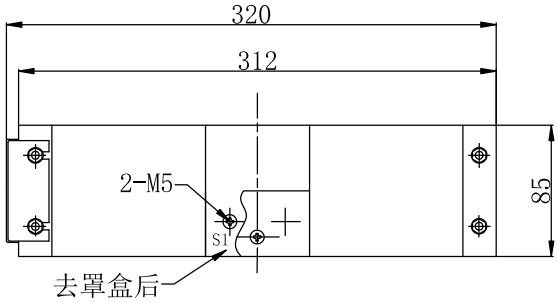

净重（Weight）：16.5kg

LMZC2-0.5 零序电流互感器

额定一次电流 Rated primary current (A)	额定二次电流 Rated secondary current (A)	准确级组合 Accuracy classes combination	额定输出 Rated output(VA)
100	1/5	10P10	3.75
150	1/5	10P10	7.5
200	1/5	10P10	10
300	1/5	10P10	15
400	1/5	10P10	15

外形尺寸图 Overall dimensions

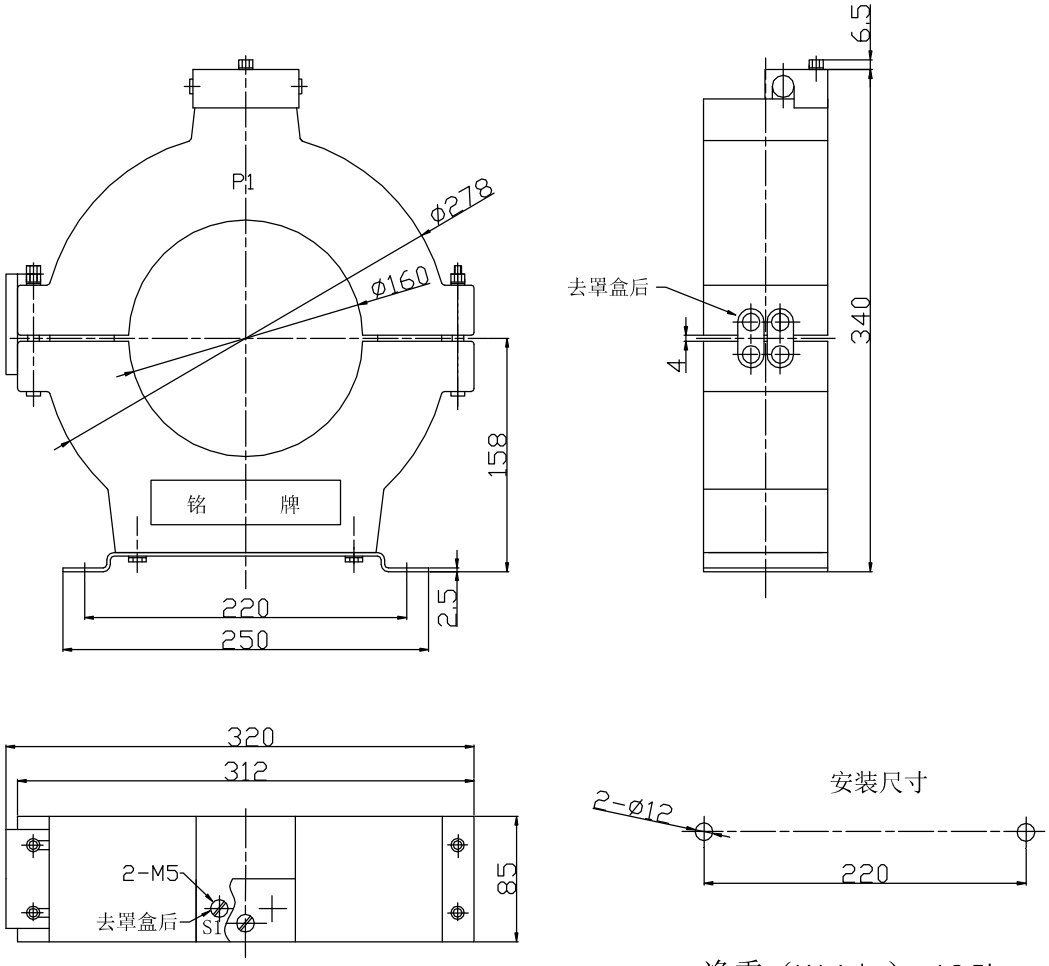

净重（Weight）：16.5kg

LMZC3-0.5 零序电流互感器

额定电流比 Rated current ratio(A)	准确级组合 Accuracy classes combination	额定输出 Rated output (VA)
50/1	10P10	1
100/1	10P10	2.5
100/5	10P10	2.5

外形尺寸图 Overall dimensions

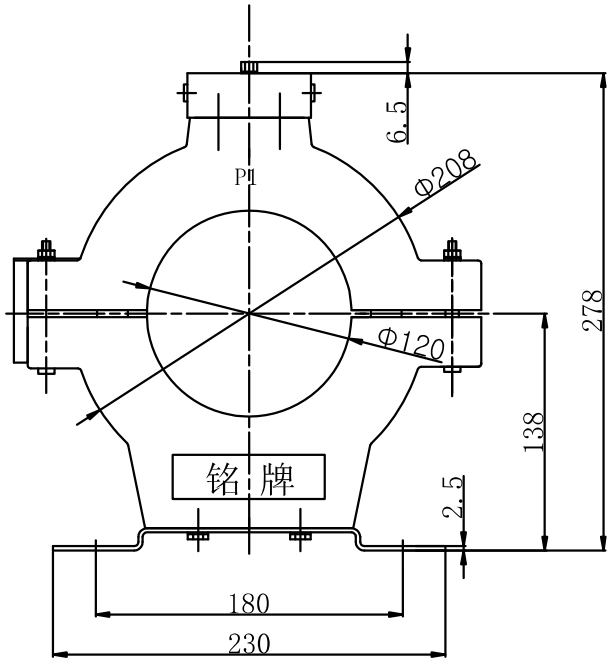

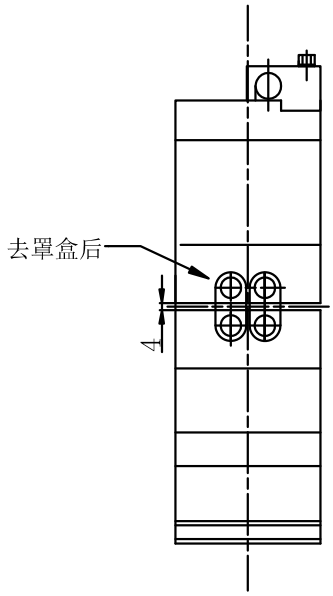

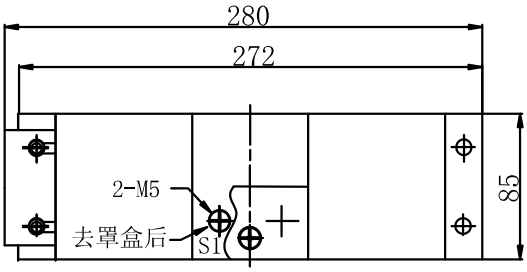

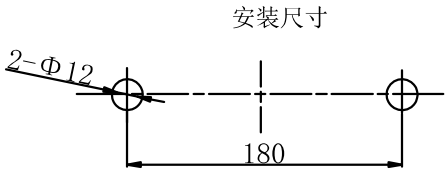

净重（Weight）：8.5kg

LMZC3-0.5b 整体式零序电流互感器

额定电流比 Rated current ratio(A)	额定二次电流 Rated secondary current (A)	准确级组合 Accuracy classes combination	额定输出 Rated output (VA)
50	1/5	10P10	1
100	1/5	10P10	3.75
200	1/5	10P10	5

外形尺寸图 Overall dimensions

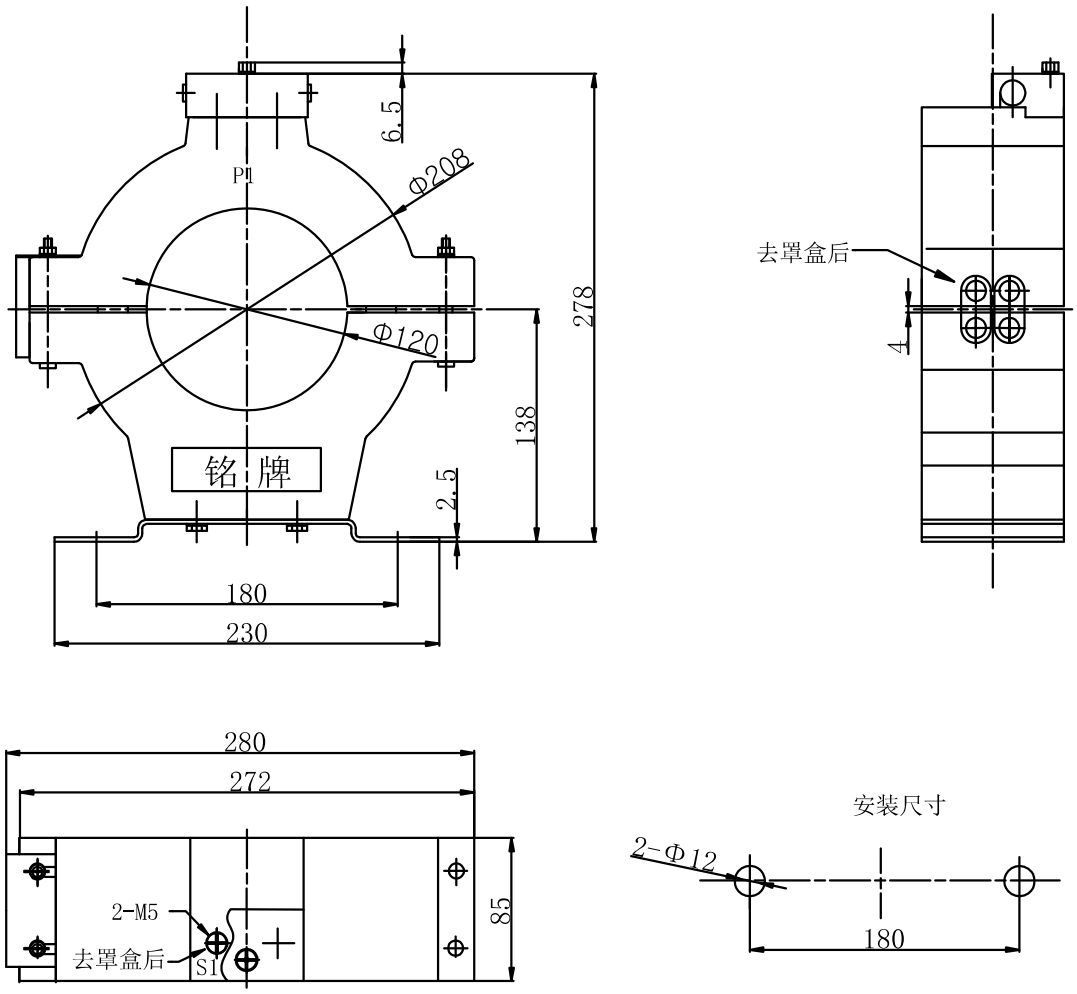

净重（Weight）：8.5kg

LMZC4-0.5 零序电流互感器

额定电流比 Rated current ratio(A)	准确级组合 Accuracy classes combination	额定输出 Rated output (VA)
50/1	10P10	1
100/1	10P10	2.5
100/5	10P10	2.5

外形尺寸图 Overall dimensions

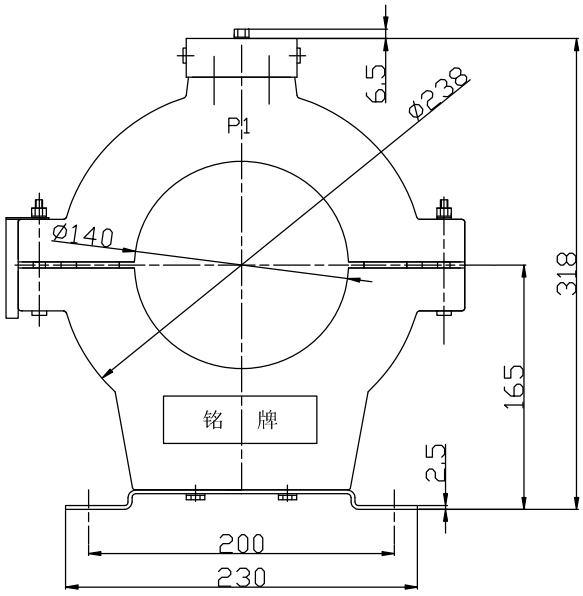

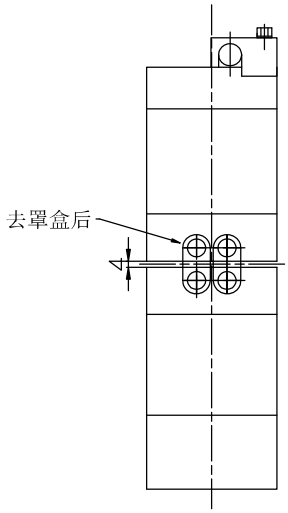

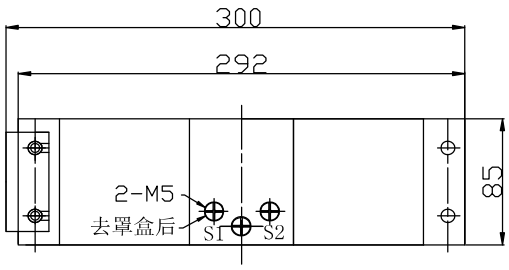

净重（Weight）：12.5kg

LMZC4-0.5b 整体式零序电流互感器

额定一次电流 Rated primary current (A)	额定二次电流 Rated secondary current (A)	准确级组合 Accuracy classes combination	额定输出 Rated output (VA)
50	1/5	10P10	1
100	1/5	10P10	3.75
200	1/5	10P10	5

外形尺寸图 Overall dimensions

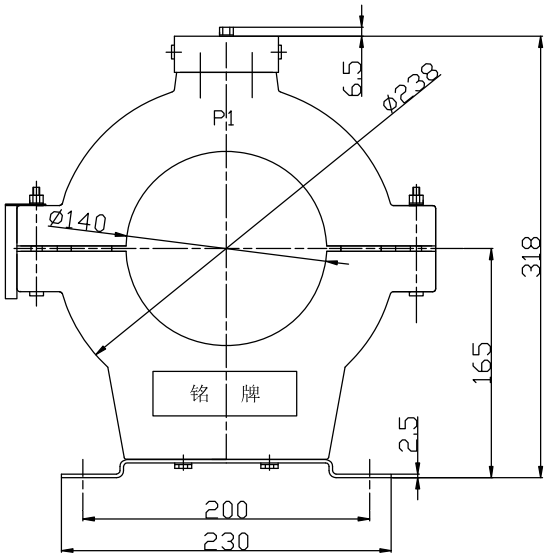

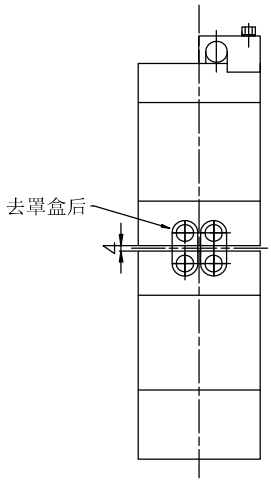

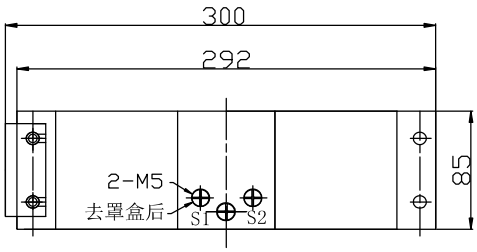

净重（Weight）：12.5kg

LMZC6-0.5 零序电流互感器

额定电流比 Rated current ratio(A)	准确级组合 Accuracy classes combination	额定输出 Rated output (VA)
50 — 75/1（5）	10P10	1
100/1（5）	10P10	2.5
150 — 400/1（5）	10P10	5

外形尺寸图 Overall dimensions

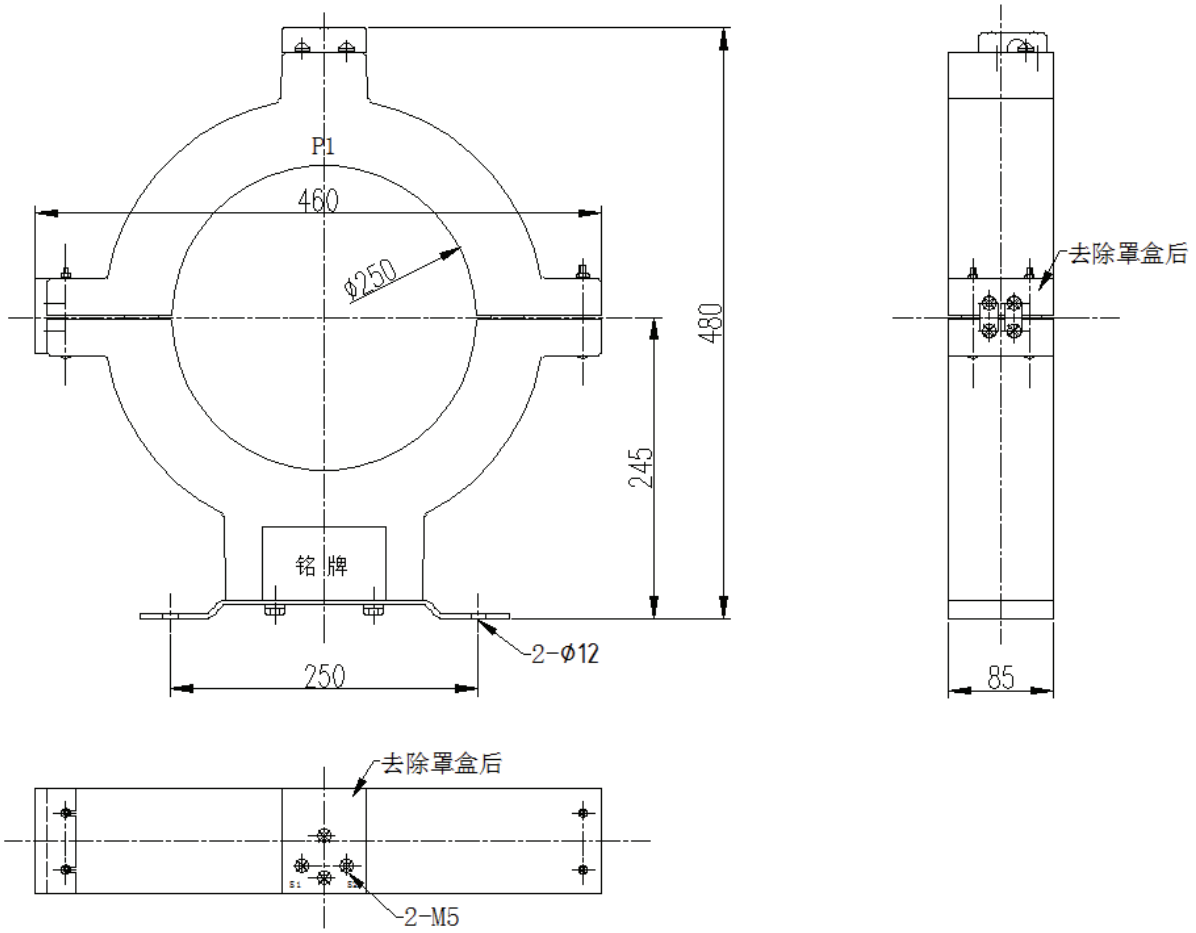

净重（Weight）：16.5kg

LMZC-0.5b 整体式零序电流互感器

额定一次电流 Rated primary current (A)	额定二次电流 Rated secondary current (A)	准确级组合 Accuracy classes combination	额定输出 Rated output(VA)
50	1/5	10P10	1.5
100	1/5	10P10	3.75
150	1/5	10P10	7.5
200	1/5	10P10	7.5
300	1/5	10P10	10

外形尺寸图 Overall dimensions

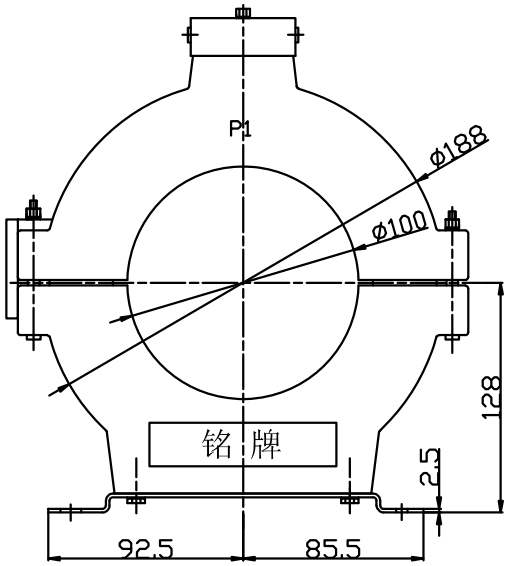

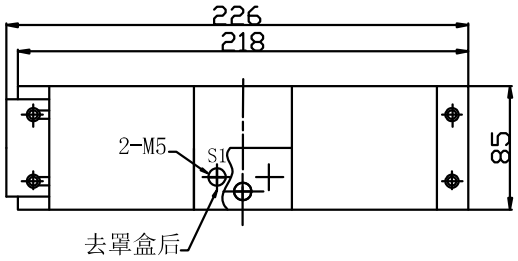

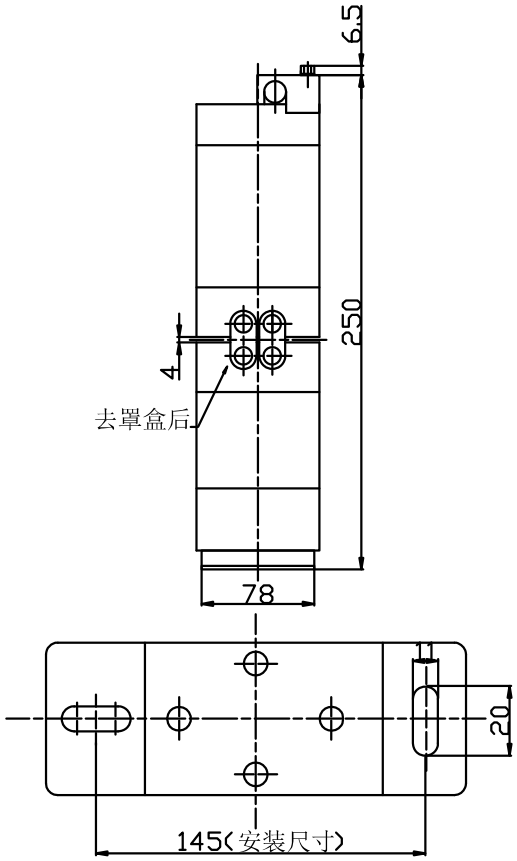

净重（Weight ）：8kg

LMZC-0.5 零序电流互感器

额定一次电流 Rated primary current (A)	额定二次电流 Rated secondary current (A)	准确级组合 Accuracy classes combination	额定输出 Rated output(VA)
50	1/5	10P10	1.5
100	1/5	10P10	3.75
150	1/5	10P10	5
200	1/5	10P10	5
300	1/5	10P10	5

外形尺寸图 Overall dimensions

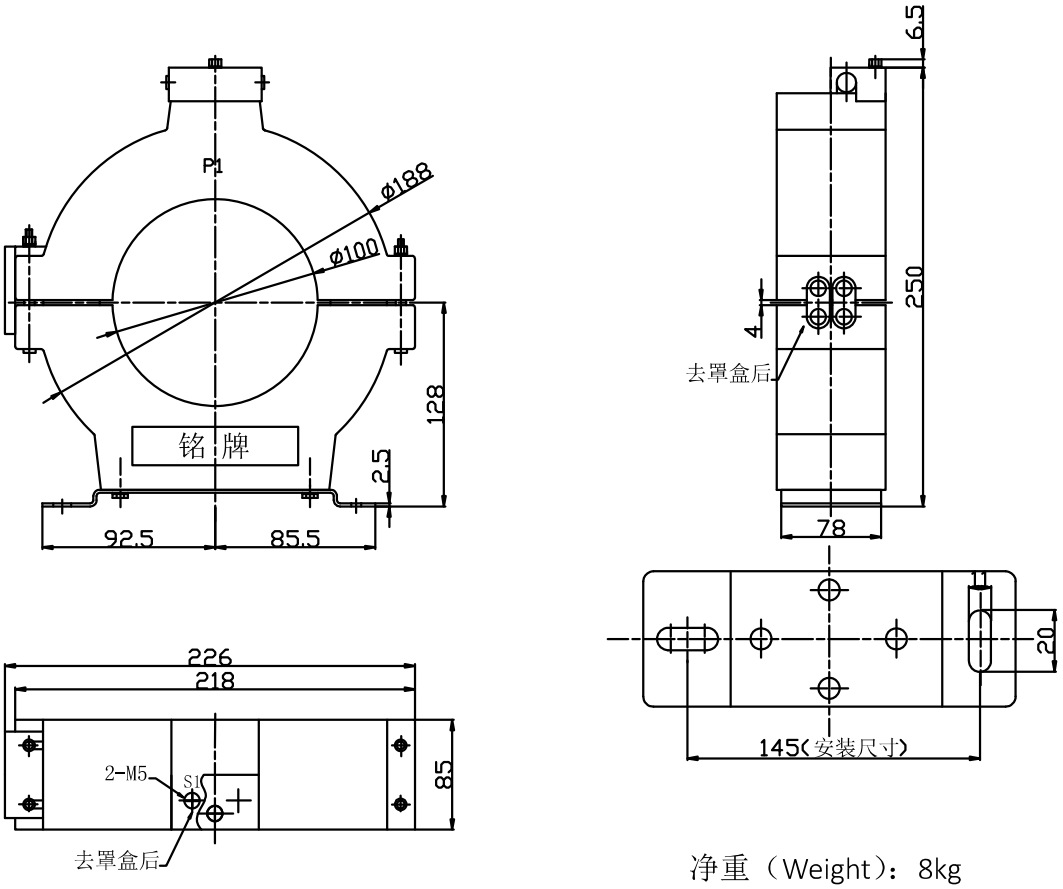

净重（Weight）：8kg

LMZ(J)2-0.66 型电流互感器

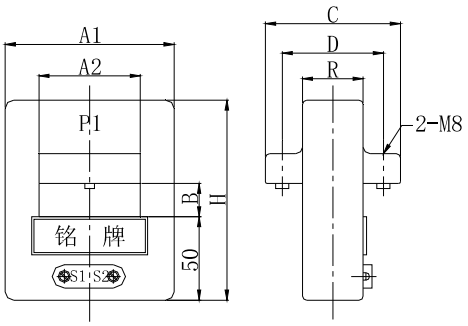

图一

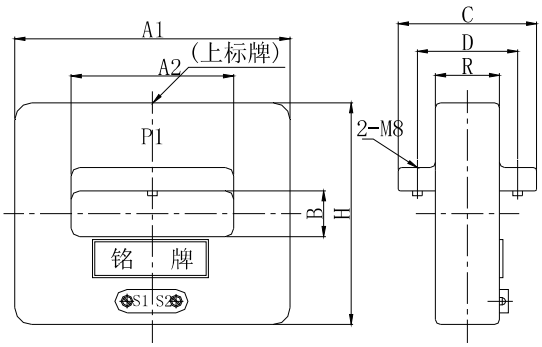

图二

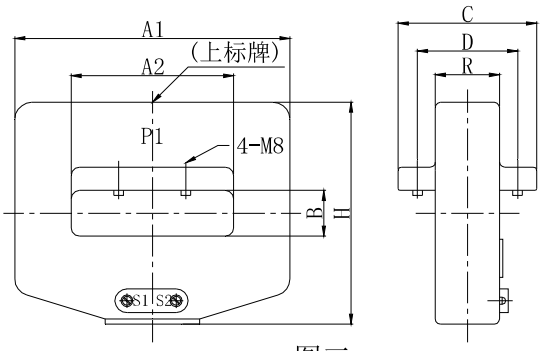

图三

净重（Weight）：0.8-6kg

型号 规格	A1	A2	B	H	C	D	R	图示	铭牌尺寸
LMZ(J)2-0.66 30×15	97	30	15	115	87	71	45.5	图一	66×20
LMZ(J)2-0.66 40×16	97	40	16	116	87	70	46	图一	66×20
LMZ(J)2-0.66 60×20	103	60	20	121	86	68	46	图一	66×20
LMZ(J)2-0.66 80×30	133	80	30	114	80	63	44	图二	66×20
LMZ(J)2-0.66 80×30加大	143	80	30	127	85	71	42	图二	上标牌71.5×35.5
LMZ(J)2-0.66 100×25	153	100	25	127	88	68	46	图二	66×20
LMZ(J)2-0.66 100×37	156	100	37	125	87	68	42	图二	上标牌99.5×34.5
LMZ(J)2-0.66 120×30	183	120	30	133	88	68	45	图二	70.5×20.5
LMZ(J)2-0.66 140×72	214	140	72	180	92	76	55	图三	上标牌91.5×45

注：1.孔径尺寸误差+2.5mm，其他尺寸误差±2mm；
2.罩盒外形尺寸：长52.5mm，宽17mm，高16mm。

型号 Type	变比 Current ratio	孔径 Aperture	参数 Data（只能选择一个准确级）					
			准确级 Accuracy class	容量(VA) Rated output	准确级 Accuracy class	容量(VA) Rated output	准确级 Accuracy class	容量(VA) Rated output
LMZ2-0.66	10-100/5	出排式	0.5	5-3.75	0.5S/0.2	5-3.75	0.2S	5-3.75
	100/5	30×15	0.5	5-3.75	0.5S/0.2	5-3.75	0.2S	2.5
	150/5	30×15	0.5	5-3.75	0.5S/0.2	5-3.75	0.2S	5-3.75
	200/5	30×15	0.5	5-3.75	0.5S/0.2	5-3.75	0.2S	5-3.75
	250/5	30×15	0.5	5-3.75	0.5S/0.2	5-3.75	0.2S	5-3.75
	300/5	40×16	0.5	5-3.75	0.5S/0.2	5-3.75	0.2S	5-3.75
LMZJ2-0.66	400/5	40×16	0.5	5-3.75	0.5S/0.2	5-3.75	0.2S	5-3.75
	500/5	60×20	0.5	10	0.5S/0.2	5-3.75	0.2S	5-3.75
	600/5	60×20	0.5	10	0.5S/0.2	5-3.75	0.2S	5-3.75
	750/5	60×20	0.5	10	0.5S/0.2	5-3.75	0.2S	5-3.75
	800/5	60×20	0.5	10	0.5S/0.2	5-3.75	0.2S	5-3.75
	800/5	100×25	0.5	10	0.5S/0.2	5-3.75	0.2S	5-3.75
	1000/5	100×25	0.5	15	0.5S/0.2	10	0.2S	10
	1200/5	100×25	0.5	15	0.5S/0.2	10	0.2S	10
	1500/5	100×25	0.5	15	0.5S/0.2	10	0.2S	10
	2000/5	120×30	0.5	20	0.5S/0.2	15	0.2S	10
	2500/5	120×30	0.5	20	0.5S/0.2	15	0.2S	10
	3000/5	120×30	0.5	20	0.5S/0.2	15	0.2S	10
	3500/5	120×30	0.5	20	0.5S/0.2	15	0.2S	10
	4000/5	120×30	0.5	20	0.5S/0.2	20	0.2S	10
	4500/5	120×30	0.5	20	0.5S/0.2	15	0.2S	10
	5000/5	120×30	0.5	20	0.5S/0.2	20	0.2S	10
LMZ2-0.66	10-100/1	出排式	0.5	5-3.75	0.5S/0.2	5-3.75	0.2S	5-3.75
	100/1	30×15	0.5	5-3.75	0.5S/0.2	5-3.75	0.2S	2.5
	150/1	30×15	0.5	5-3.75	0.5S/0.2	5-3.75	0.2S	5-3.75
	200/1	30×15	0.5	5-3.75	0.5S/0.2	5-3.75	0.2S	5-3.75
	250/1	30×15	0.5	5-3.75	0.5S/0.2	5-3.75	0.2S	5-3.75
	300/1	40×16	0.5	5-3.75	0.5S/0.2	5-3.75	0.2S	5-3.75
	350/1	40×16	0.5	5-3.75	0.5S/0.2	5-3.75	0.2S	5-3.75
LMZJ2-0.66	400/1	40×16	0.5	5-3.75	0.5S/0.2	5-3.75	0.2S	5-3.75
	450/1	40×16	0.5	5-3.75	0.5S/0.2	5-3.75	0.2S	5-3.75
	500/1	60×20	0.5	10	0.5S/0.2	5-3.75	0.2S	5-3.75
	600/1	60×20	0.5	10	0.5S/0.2	5-3.75	0.2S	5-3.75
	750/1	60×20	0.5	10	0.5S/0.2	5-3.75	0.2S	5-3.75
	800/1	60×20	0.5	10	0.5S/0.2	5-3.75	0.2S	5-3.75
	800/1	100×25	0.5	10	0.5S/0.2	5-3.75	0.2S	5-3.75
	1000/1	100×25	0.5	15	0.5S/0.2	10	0.2S	10
	1200/1	100×25	0.5	15	0.5S/0.2	10	0.2S	10
	1500/1	100×25	0.5	15	0.5S/0.2	10	0.2S	10
	2000/1	120×30	0.5	20	0.5S/0.2	20	0.2S	10
	2500/1	120×30	0.5	20	0.5S/0.2	20	0.2S	10
	3000/1	120×30	0.5	20	0.5S/0.2	20	0.2S	10
	3500/1	120×30	0.5	20	0.5S/0.2	20	0.2S	10
	4000/1	140×72	0.5	20	0.5S/0.2	20	0.2S	10
	4500/1	140×72	0.5	20	0.5S/0.2	20	0.2S	10
	5000/1	140×72	0.5	20	0.5S/0.2	20	0.2S	10

LMZJ-0.5b 电流互感器

额定一次电流 Rated primary current (A)	额定二次电流 Rated secondary current (A)	准确级组合/负荷 Accuracy classes /Rated output(VA)
1500	1/5	0.5/15
	1/5	10P10/20
2000	1/5	0.5/20
	1/5	10P10/30
3000	1/5	0.5/20
	1/5	10P10/30
4000	1/5	0.5/20
	1/5	10P10/30
5000	1/5	0.5/20
	1/5	10P10/30

外形尺寸图 Overall dimensions

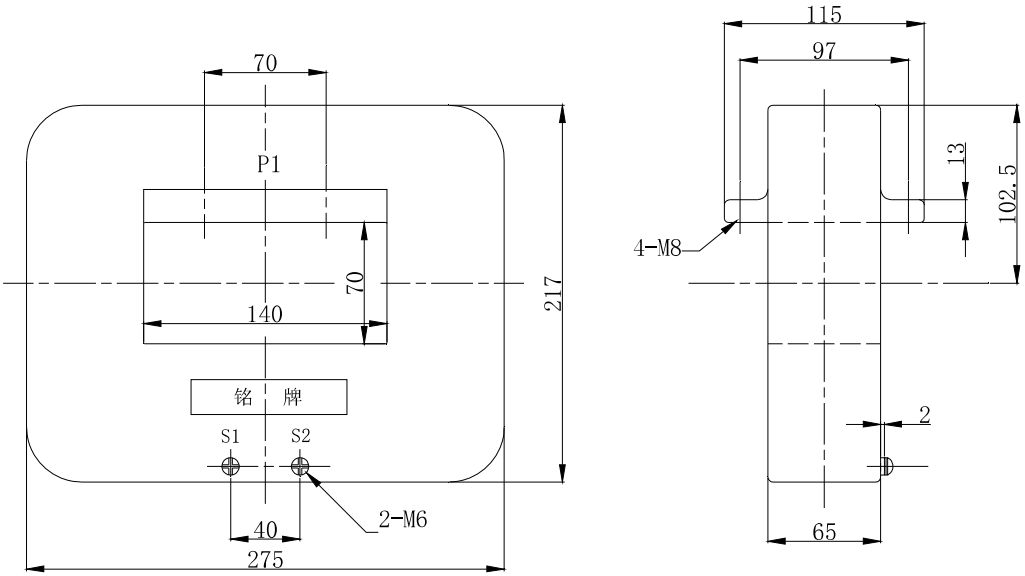

净重(Weight)：7kg

LMZJ-0.5c 电流互感器

额定一次电流 Rated primary current (A)	额定二次电流 Rated secondary current (A)	准确级组合/负荷 Accuracy classes /Rated output(VA)
4000	1/5	0.5/30
5000	1/5	0.5/30 10P10/45

外形尺寸图 Overall dimensions

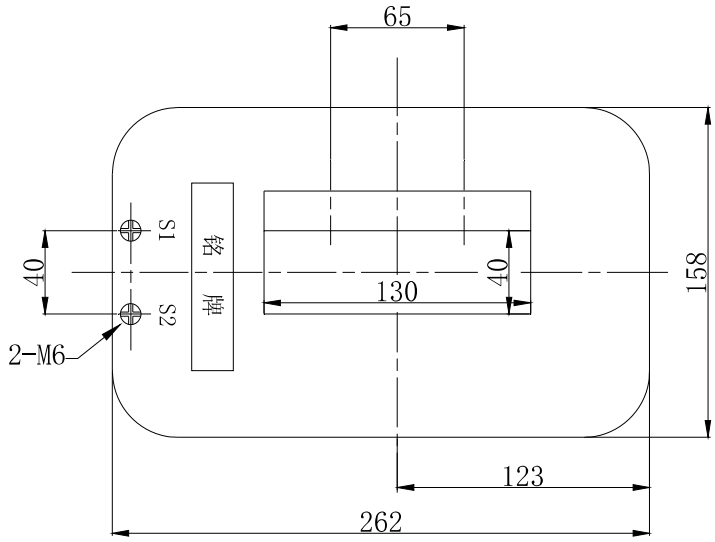

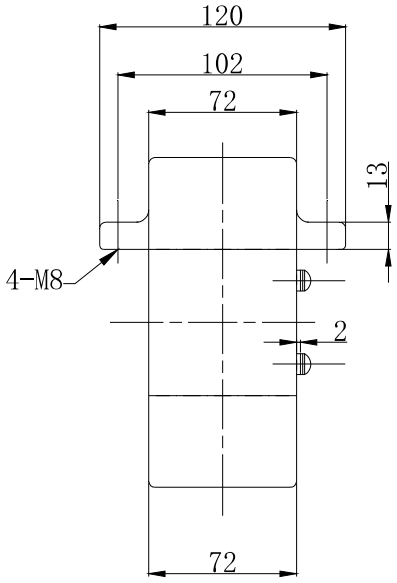

净重（Weight）：5.8kg

LMZJ-0.5d 电流互感器

额定电流比 Rated current ratio (A)	准确级组合/负荷 Accuracy classes /Rated output(VA)
1000/1 或 1000/5	5P20/10VA
1500/1 或 1500/5	5P20/15VA
2000/1 或 2000/5	5P20/25VA
3000/1 或 3000/5	5P20/30VA
4000/1 或 4000/5	5P20/20VA
5000/1 或 5000/5	5P20/20VA

外形尺寸图 Overall dimensions

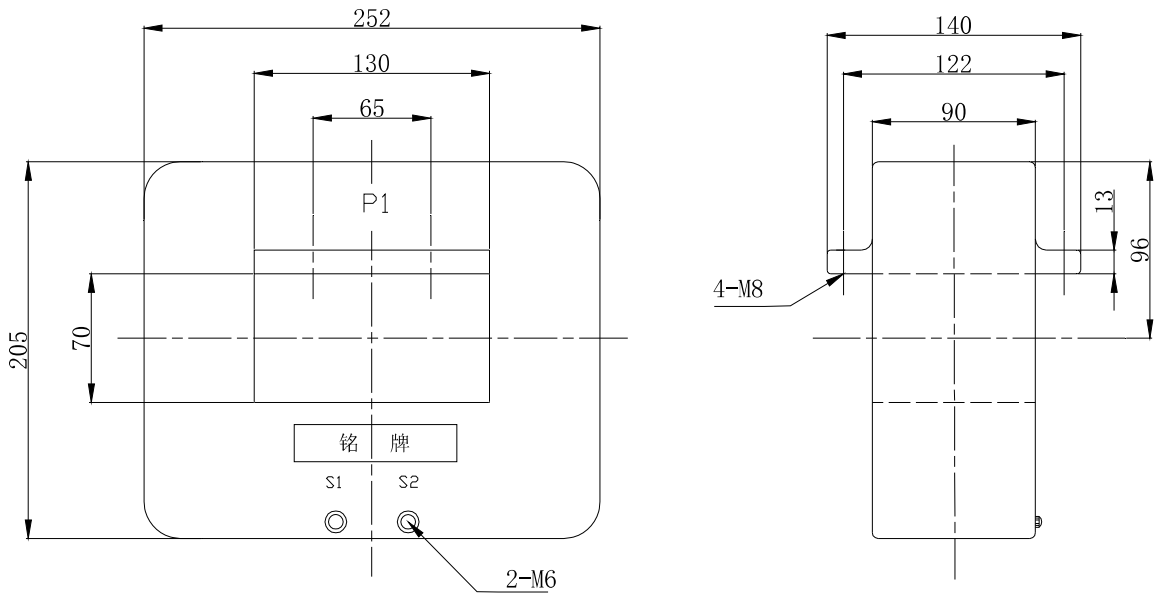

净重(Weight)：8kg

LQG-0.66 电流互感器

额定一次电流(A) Rated primary current	额定二次电流 Rated secondary current (A)	铜排尺寸（mm） Copper bar size		图示 Graphic	尺寸误差（mm） Dimension error
		宽 Width	厚 Thickness		
50-150	1/5	25	3	图一	±2
200-300	1/5	40	3	图一	
400-500	1/5	40	5	图二	
600-750	1/5	40	6	图二	

外形尺寸图 Overall dimensions

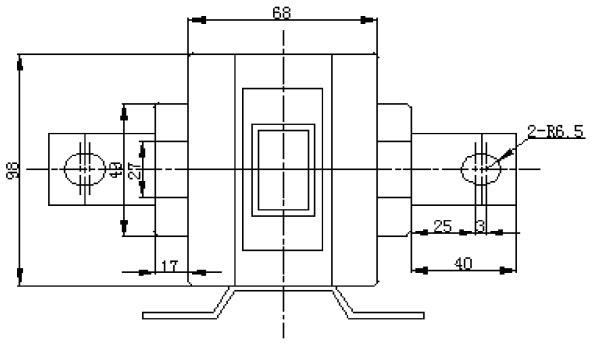

图一

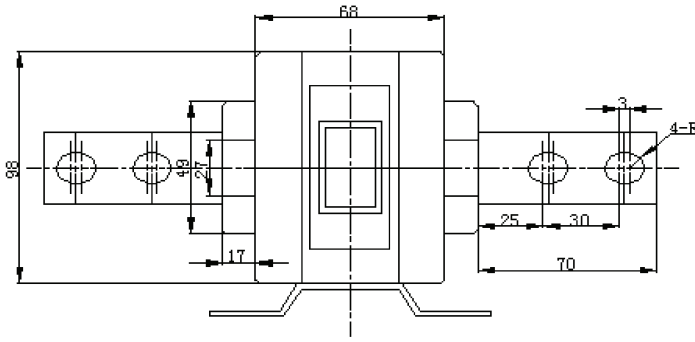

图二

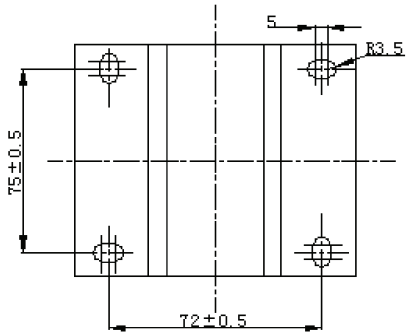

安装尺寸

外壳尺寸公差为±2mm

净重（Weight ）：2.2kg

LS(X)Z 系列三相(零序)一体组合式电流互感器

LS(X)Z 型三相(零序)一体组合式电流互感器适合安装在户外断路器或环网开关柜中，用于三相及零序电流的测量和保护，也可用于多根电缆回路的零序电流测量和保护。

外形尺寸图 Overall dimensions

LS(X)Z2-110085105

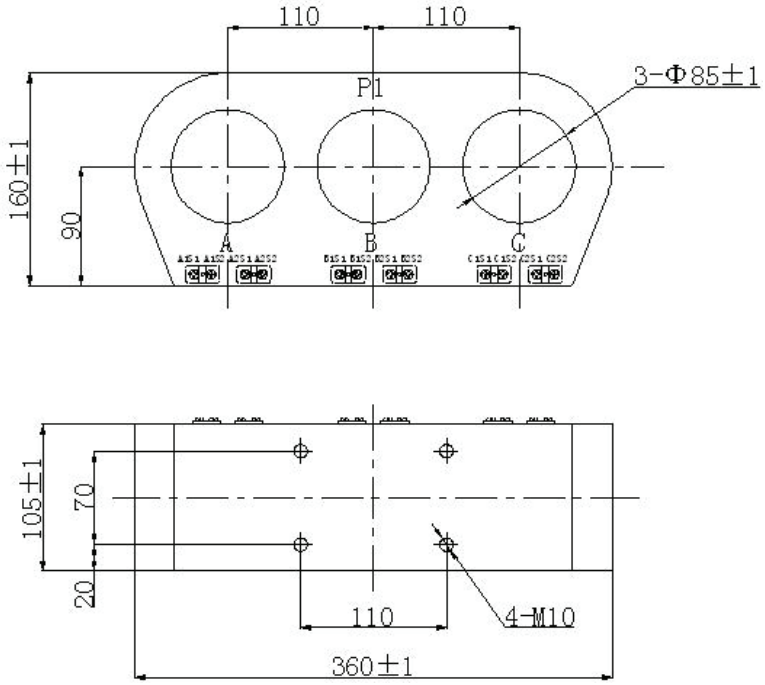

净重(Weight)：25kg

LS(X)Z-135083070

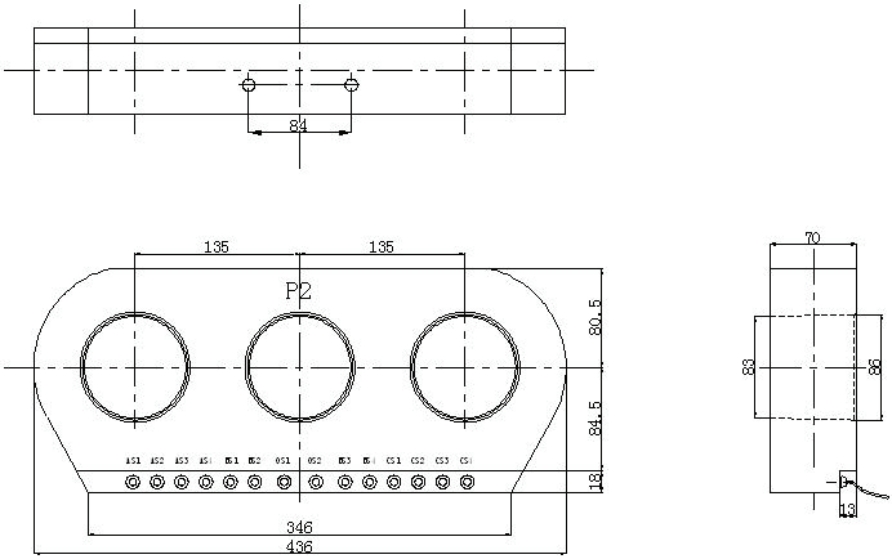

净重(Weight)：21kg

LXK-Φ120，LXKB-Φ120 零序电流互感器

型号 Type	额定电流比(A) Rated current ratio	动作电流(A) Starting Current	额定输出 Rated output (VA)	准确限值系数 Accuracy limit factor	继电器型号 Type of relay	继电器连接方式 Connected style of relay
LXK-Φ120	----	2-5	----	----	DD11/60	并联
LXKB-Φ120	300/5	----	1-15	15	----	----
	200/5			10		
	150/5			5		
	----	2-5	----	----	D11/60	并联

外形尺寸图 Overall dimensions

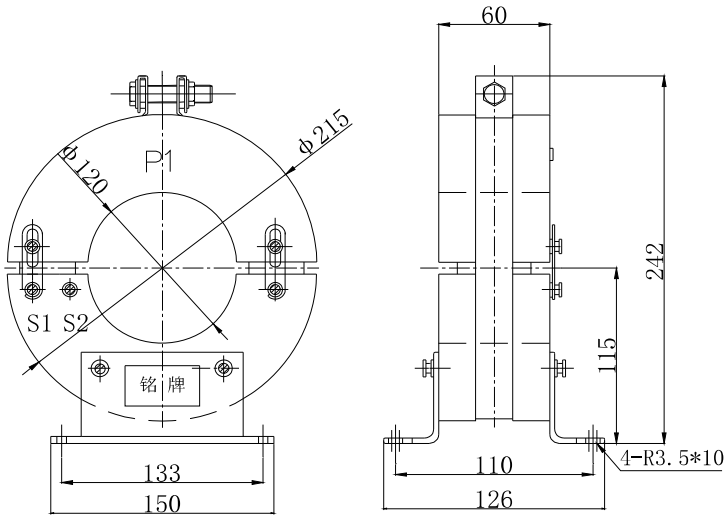

LXK-Φ120　　净重(Weight)：8.2kg

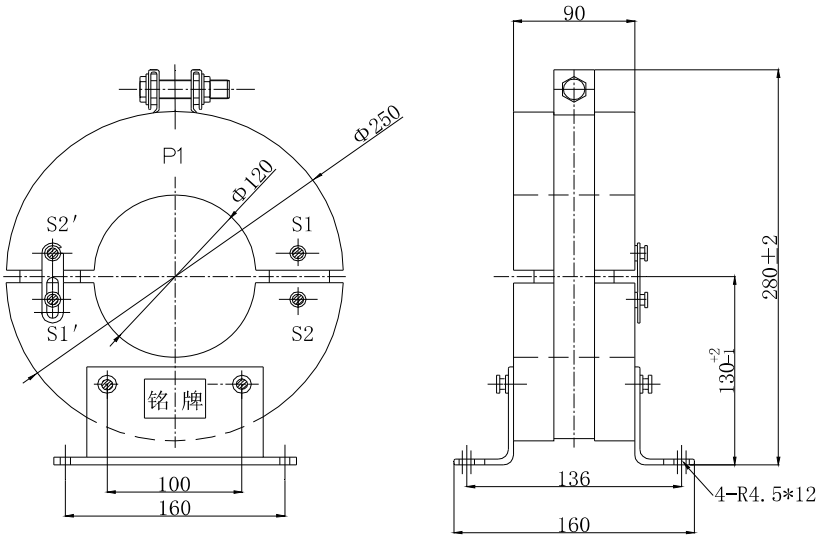

LXKB-Φ120　　净重(Weight)：18kg

LXKB2-Φ120S 零序电流互感器

额定电流比(A) Rated current ratio	额定输出 Rated output (VA)	准确限值系数 Accuracy limit factor
600/5	1-15	15
500/5		15
400/5		15
300/5		15
200/5		10
150/5		5

外形尺寸图 Overall dimensions

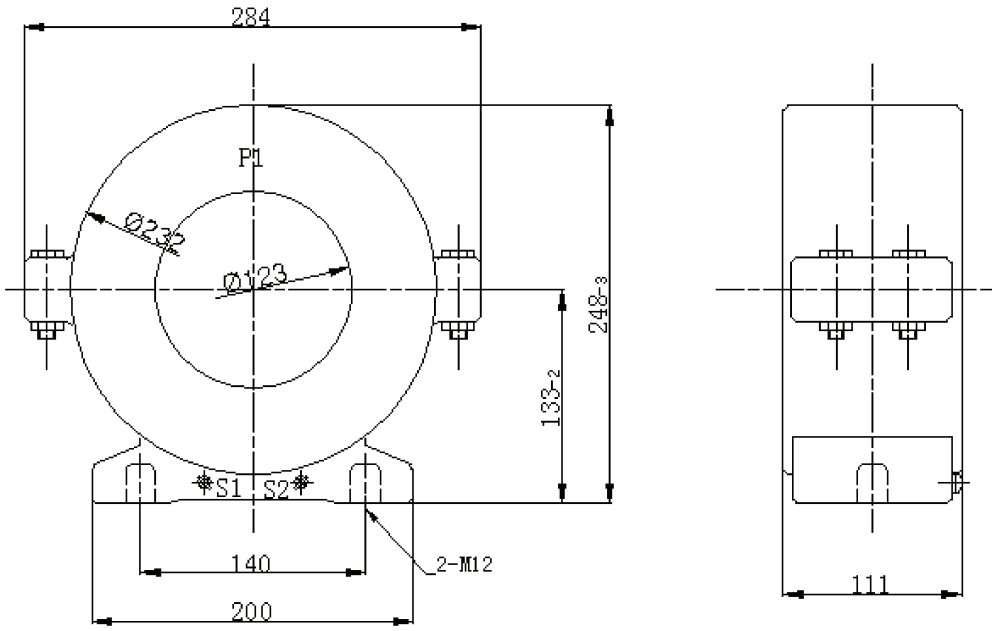

净重(Weight)：18kg

LXKB-Φ100S(120S、140S、160S、180S、200S)零序电流互感器

外形尺寸图 Overall dimensions

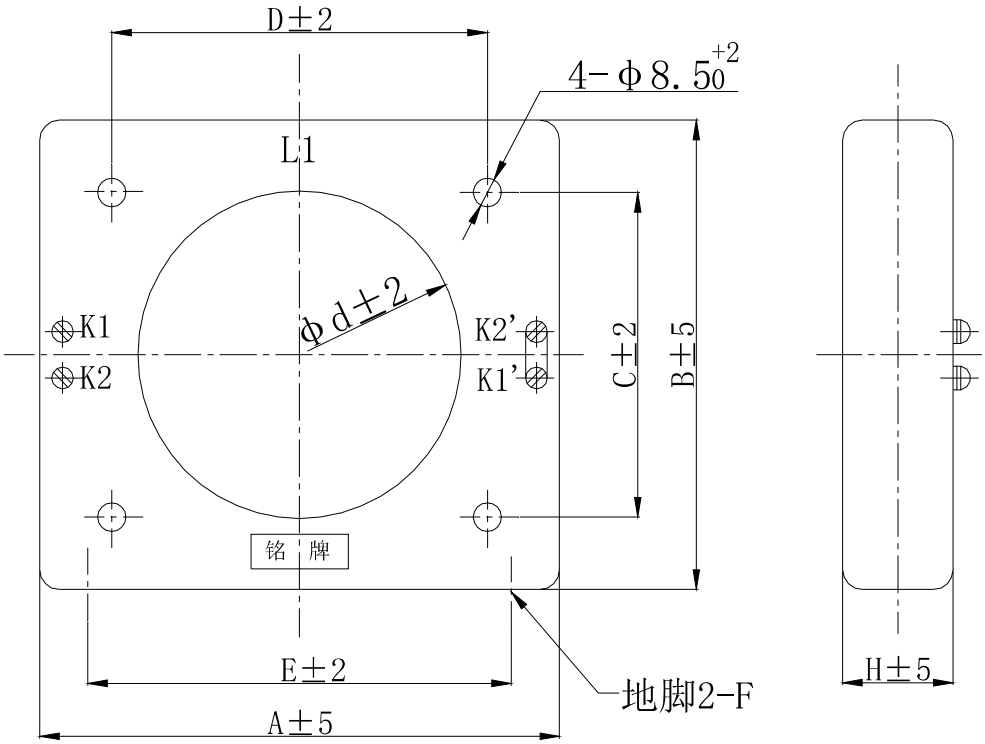

净重（Weight）：6-15kg

型号	d	外形尺寸			安装尺寸			
		A	B	H	C	D	E	F
LXKB-Φ100S	100	216	190	54	140	158	192	M8
LXKB-Φ120S	120	236	210	60	156	173	212	M8
LXKB-Φ140S	140	300	270	82	180	216	270	M12
LXKB-Φ160S	160	300	270	82	180	216	270	M12
LXKB-Φ180S	180	300	270	82	180	216	270	M12
LXKB-Φ200S	200	387	345	82	238	279	355	M12

LXKB-Φ120b 整体式零序电流互感器

额定一次电流 Rated primary current (A)	额定二次电流 Rated secondary current (A)	准确级组合 Accuracy classes combination	额定输出 Rated output (VA)
50	1/5	10P10	2.5
100	1/5	10P10	7.5
200	1/5	10P10	15
300	1/5	10P10	20
400	1/5	10P15	15
600	1/5	10P20	15

外形尺寸图 Overall dimensions

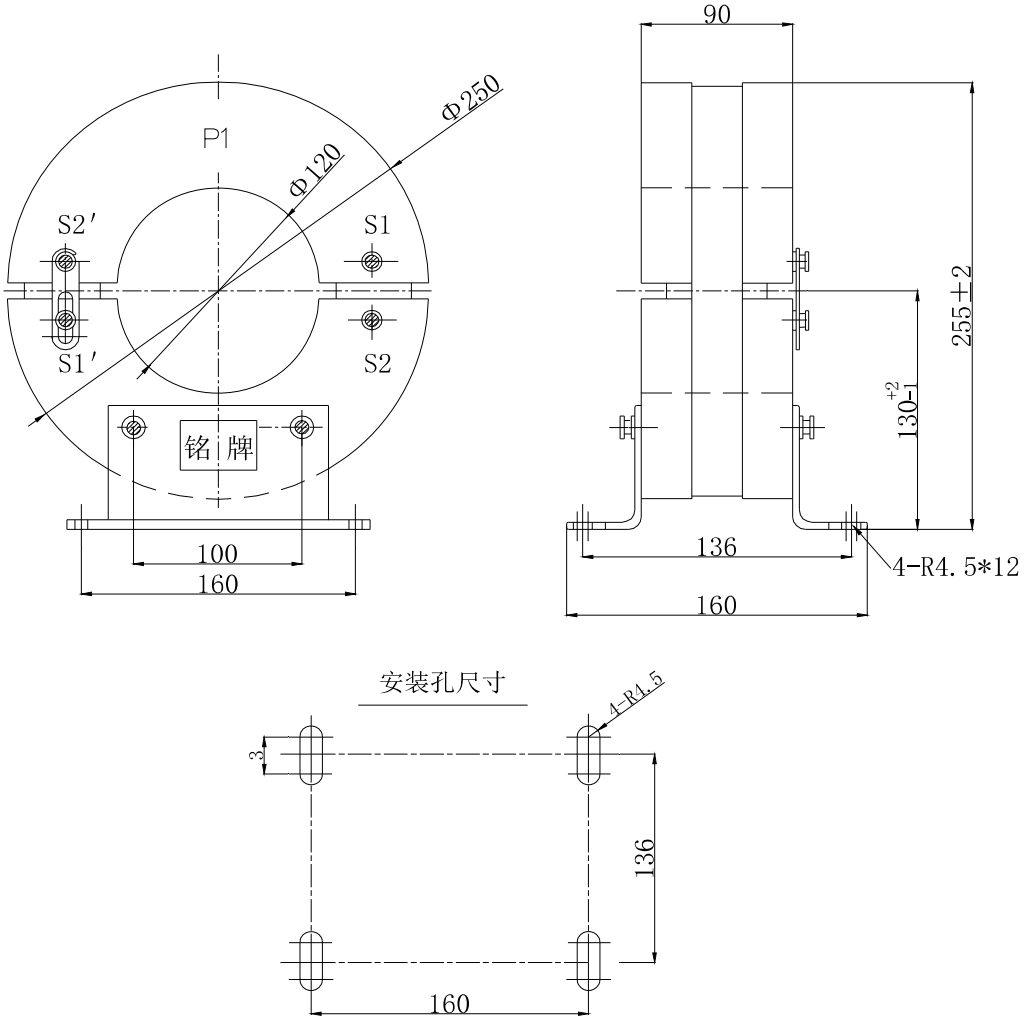

净重(Weight)：18kg

LXKB-Φ240、300 零序电流互感器

外形尺寸图 Overall dimensions

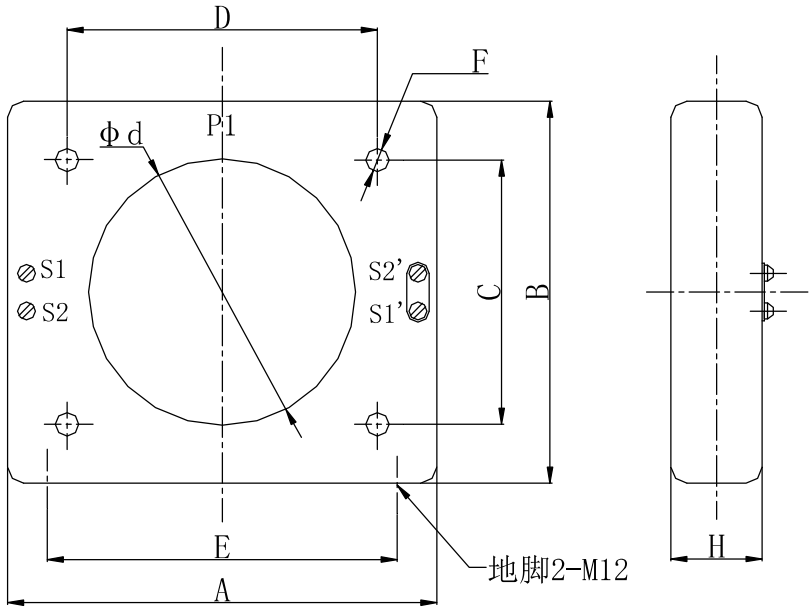

图中未注公差尺寸±5mm

净重（Weight）：11-20kg

型号 type	d（mm）	外形尺寸（mm） Overall dimensions			安装尺寸（mm） Inatalling dimensiongs			
		A	B	H	C	D	E	F
LXKB-Φ240	240	386	344	82	238	279	355	4×10.5
LXKB-Φ300	300	464	412	81	290	340	428	4×9.5

LXZB2-Φ120S 整体式零序电流互感器

额定电流比(A) Rated current ratio	额定输出 Rated output (VA)	准确限值系数 Accuracy limit factor
600/5	1-15	15
500/5		15
400/5		15
300/5		15
200/5		10
150/5		5

外形尺寸图 Overall dimensions

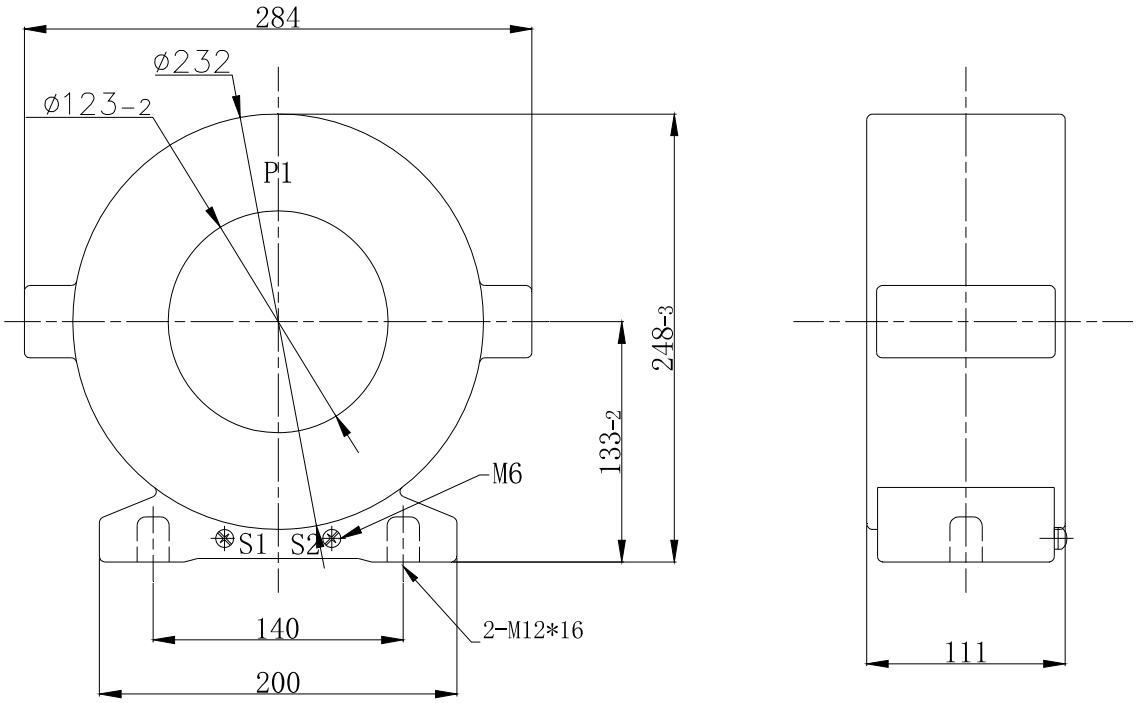

净重(Weight)：18kg

LXZB-Φ100S(120S、140S、160S、180S、200S)整体式零序电流互感器

外形尺寸图 Overall dimensions

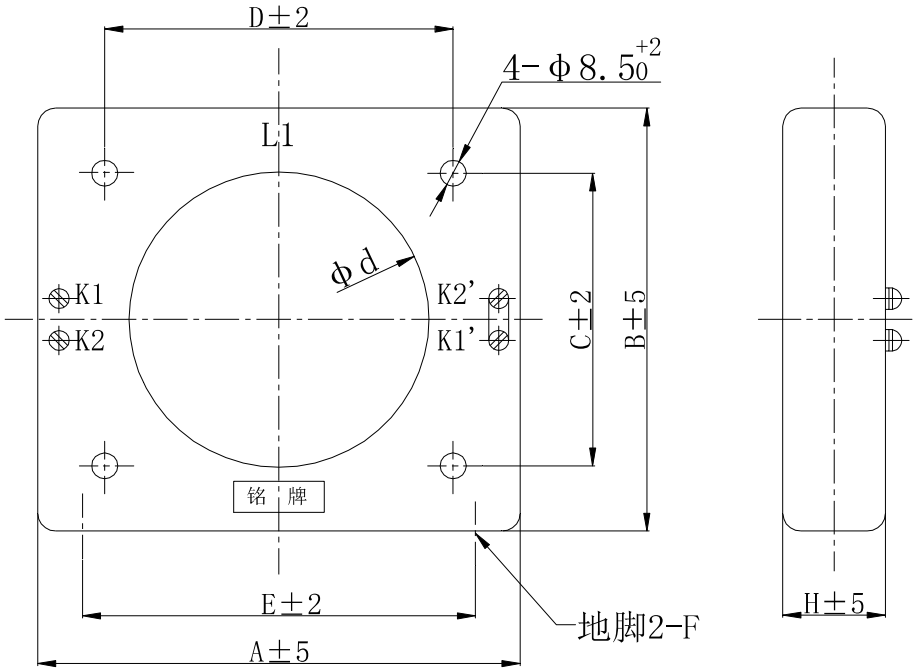

净重(Weight)：5-14kg

型号	d	外形尺寸			安装尺寸			
		A	B	H	C	D	E	F
LXZB-Φ100S	100	216	190	54	140	158	192	M8
LXZB-Φ120S	120	236	210	60	156	173	212	M8
LXZB-Φ140S	140	300	270	82	180	216	270	M12
LXZB-Φ160S	160	300	270	82	180	216	270	M12
LXZB-Φ180S	180	300	270	82	180	216	270	M12
LXZB-Φ200S	200	387	345	82	238	279	355	M12

LZK-0.66I 型系列电流互感器（等同于 BH-0.66I 系列、SDH-0.66I 系列）

变比 Current ratio	孔径 Aperture	参数 Date（只能选择一个准确级）					
		准确级 Accuracy class	容量 (VA)rated output	准确级 Accuracy class	容量 (VA)rated output	准确级 Accuracy class	容量 (VA)rated output
10-100/5	出排式	0.5	2.5	0.5S/0.2	2.5	0.2S	2.5
75/5	Φ30 加大	0.5	2.5	0.5S/0.2	/	0.2S	/
100/5	Φ30 加大	0.5	2.5	0.5S/0.2	2.5	0.2S	2.5
150/5	Φ30	0.5	2.5	0.5S/0.2	/	0.2S	/
200/5	Φ30	0.5	5-3.75	0.5S/0.2	/	0.2S	/
250/5	Φ30	0.5	5-3.75	0.5S/0.2	/	0.2S	/
300/5	Φ30	0.5	5-3.75	0.5S/0.2	/	0.2S	/
300/5	Φ40	0.5	5-3.75	0.5S/0.2	2.5	0.2S	2.5
400/5	Φ40	0.5	5	0.5S/0.2	2.5	0.2S	2.5
500/5	Φ40	0.5	5	0.5S/0.2	2.5	0.2S	2.5
500/5	Φ60	0.5	10	0.5S/0.2	5	0.2S	5-3.75
600/5	Φ60	0.5	10	0.5S/0.2	5	0.2S	5-3.75
700/5	Φ60	0.5	10	0.5S/0.2	5	0.2S	5-3.75
750/5	Φ60	0.5	10	0.5S/0.2	5	0.2S	5-3.75
800/5	Φ60	0.5	10	0.5S/0.2	5	0.2S	5-3.75
1000/5	Φ60	0.5	10	0.5S/0.2	10	0.2S	10
1200/5	Φ60	0.5	20	0.5S/0.2	10	0.2S	10
750/5	Φ80	0.5	10	0.5S/0.2	5	0.2S	5-3.75
800/5	Φ80	0.5	10	0.5S/0.2	10	0.2S	10
1000/5	Φ80	0.5	10	0.5S/0.2	10	0.2S	10
1200/5	Φ80	0.5	15	0.5S/0.2	10	0.2S	10
1000/5	Φ100	0.5	15	0.5S/0.2	10	0.2S	10
1200/5	Φ100	0.5	15	0.5S/0.2	10	0.2S	10
1500/5	Φ100	0.5	20	0.5S/0.2	20	0.2S	10
2000/5	Φ100	0.5	20	0.5S/0.2	20	0.2S	10
2500/5	Φ100	0.5	20	0.5S/0.2	20	0.2S	10
10-100/1	出排式	0.5	2.5	0.5S/0.2	2.5	0.2S	2.5
150/1	Φ30 加大	0.5	2.5	0.5S/0.2	1	0.2S	1
200/1	Φ30 加大	0.5	2.5	0.5S/0.2	1	0.2S	1
250/1	Φ30 加大	0.5	2.5	0.5S/0.2	2.5	0.2S	2.5
300/1	Φ30 加大	0.5	2.5	0.5S/0.2	2.5	0.2S	2.5
400/1	Φ40	0.5	5	0.5S/0.2	2.5	0.2S	2.5
500/1	Φ40	0.5	5	0.5S/0.2	5	0.2S	5-3.75
500/1	Φ60	0.5	5	0.5S/0.2	5	0.2S	5-3.75
600/1	Φ60	0.5	10	0.5S/0.2	5	0.2S	5-3.75
750/1	Φ60	0.5	10	0.5S/0.2	5	0.2S	5-3.75
800/1	Φ60	0.5	10	0.5S/0.2	5	0.2S	5-3.75
1000/1	Φ60	0.5	10	0.5S/0.2	10	0.2S	10
750/1	Φ80	0.5	10	0.5S/0.2	5	0.2S	5-3.75
800/1	Φ80	0.5	10	0.5S/0.2	5	0.2S	5-3.75
1000/1	Φ80	0.5	10	0.5S/0.2	10	0.2S	10
1500/1	Φ100	0.5	10	0.5S/0.2	10	0.2S	10
2000/1	Φ100	0.5	10	0.5S/0.2	10	0.2S	10

型号 规格	外形尺寸			安装孔距
	A	B	C	D
LZK-0.66I 出排式	87	54	103	45
LZK-0.66I Φ30	60	36	79	31
LZK-0.66I Φ30加大	75	43	98	44
LZK-0.66I Φ40	77	43	98	42
LZK-0.66I Φ60	103	40	127	50
LZK-0.66I Φ80	125	40	118	50
LZK-0.66I Φ100	170	40	135	100

注：孔径尺寸误差+2.5mm，其余尺寸误差±2mm.

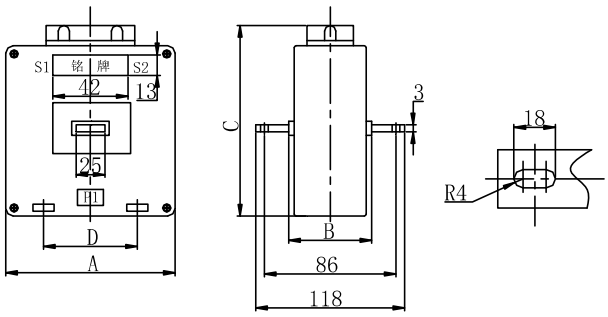

LZK-0.66I 出排式 示意图

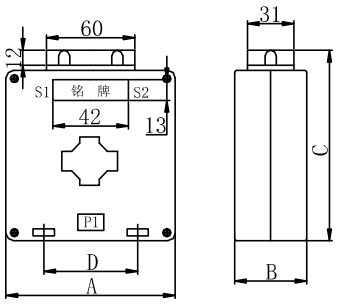

LZK-0.66I 穿心式 示意图

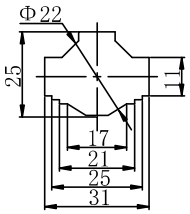

LZK-0.66I
Φ30

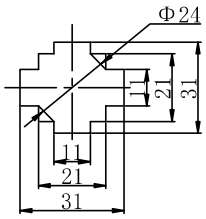

LZK-0.66I
Φ30加大

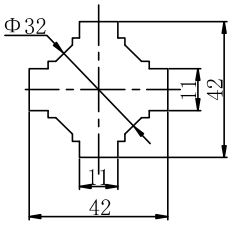

LZK-0.66I
Φ40

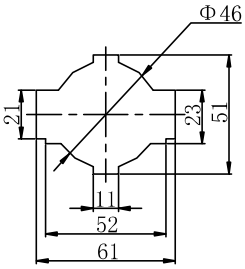

LZK-0.66I
Φ60

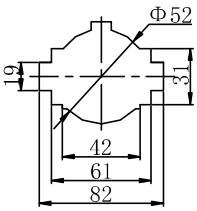

LZK-0.66I
Φ80

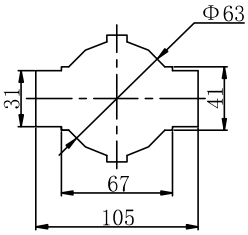

LZK-0.66I
Φ100

配件示意图

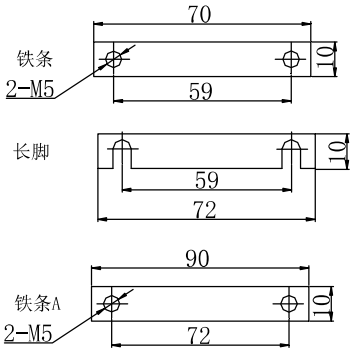

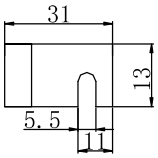

短脚

吸盘

孔距误差尺寸±1mm，其余误差尺寸±2mm。

孔径与配件搭配如下

1、出排式

短脚
4

2、Φ30孔、Φ30加大孔、Φ40孔、Φ60孔

铁条	长脚	吸盘	M5×30 螺钉
1	2	2	2

3、Φ80孔、Φ100孔

铁条	长脚	吸盘	M5×50 螺钉
1	2	2	2

LZK-0.66II 型系列电流互感器（等同于 BH-0.66II 系列、SDH-0.66II 系列）

变比 Current ratio	孔径 Aperture	参数 Date（只能选择一个准确级）					
		准确级 Accuracy class	容量 (VA) rated output	准确级 Accuracy class	容量 (VA) rated output	准确级 Accuracy class	容量 (VA) rated output
100/5	40×30	0.5	2.5	0.5S/0.2	/	0.2S	/
150/5	40×30	0.5	2.5	0.5S/0.2	/	0.2S	/
200/5	40×30	0.5	2.5	0.5S/0.2	/	0.2S	/
250/5	40×30	0.5	2.5	0.5S/0.2	/	0.2S	/
300/5	40×30	0.5	5	0.5S/0.2	2.5	0.2S	2.5
400/5	40×30	0.5	5	0.5S/0.2	5-3.75	0.2S	5-3.75
500/5	50×30	0.5	5	0.5S/0.2	5	0.2S	5-3.75
600/5	50×30	0.5	10	0.5S/0.2	10	0.2S	10
750/5	50×30	0.5	10	0.5S/0.2	10	0.2S	10
800/5	50×30	0.5	10	0.5S/0.2	10	0.2S	10
500/5	60×30	0.5	10	0.5S/0.2	5	0.2S	5-3.75
600/5	60×30	0.5	10	0.5S/0.2	5	0.2S	5-3.75
600/5	60×50	0.5	10	0.5S/0.2	10	0.2S	10
750/5	60×50	0.5	10	0.5S/0.2	10	0.2S	10
800/5	60×50	0.5	10	0.5S/0.2	10	0.2S	10
1000/5	60×50	0.5	10	0.5S/0.2	10	0.2S	10
1200/5	60×50	0.5	10	0.5S/0.2	10	0.2S	10
1500/5	60×50	0.5	10	0.5S/0.2	10	0.2S	10
700/5	80×30	0.5	10	0.5S/0.2	5	0.2S	5-3.75
750/5	80×30	0.5	10	0.5S/0.2	5	0.2S	5-3.75
800/5	80×30	0.5	10	0.5S/0.2	5	0.2S	5-3.75
1000/5	80×30	0.5	15	0.5S/0.2	10	0.2S	10
1200/5	80×30	0.5	15	0.5S/0.2	10	0.2S	10
1500/5	80×30	0.5	20	0.5S/0.2	15	0.2S	10
800/5	80×50	0.5	10	0.5S/0.2	10	0.2S	10
1000/5	80×50	0.5	10	0.5S/0.2	10	0.2S	10
1200/5	80×50	0.5	10	0.5S/0.2	10	0.2S	10
1500/5	80×50	0.5	20	0.5S/0.2	10	0.2S	10
2000/5	80×50	0.5	20	0.5S/0.2	10	0.2S	10
2500/5	80×50	0.5	20	0.5S/0.2	10	0.2S	10
1500/5	100×30	0.5	10	0.5S/0.2	10	0.2S	10
2000/5	100×30	0.5	10	0.5S/0.2	10	0.2S	10
2500/5	100×30	0.5	10	0.5S/0.2	10	0.2S	10
3000/5	100×30	0.5	10	0.5S/0.2	10	0.2S	10
1000/5	100×50	0.5	15	0.5S/0.2	10	0.2S	10
1200/5	100×50	0.5	15	0.5S/0.2	10	0.2S	10
1500/5	100×50	0.5	20	0.5S/0.2	15	0.2S	10
2000/5	100×50	0.5	20	0.5S/0.2	15	0.2S	10
1500/5	125×52	0.5	10	0.5S/0.2	10	0.2S	10
1800/5	125×52	0.5	10	0.5S/0.2	10	0.2S	10
2000/5	125×52	0.5	10	0.5S/0.2	10	0.2S	10

变比 Current ratio	孔径 Aperture	参数 Date（只能选择一个准确级）					
		准确级 Accuracy class	容量 (VA)rated output	准确级 Accuracy class	容量 (VA)rated output	准确级 Accuracy class	容量 (VA)rated output
2500/5	125×52	0.5	10	0.5S/0.2	10	0.2S	10
3000/5	125×52	0.5	10	0.5S/0.2	10	0.2S	10
3500/5	125×52	0.5	10	0.5S/0.2	/	0.2S	/
4000/5	125×52	0.5	10	0.5S/0.2	/	0.2S	/
1000/5	140×50	0.5	10	0.5S/0.2	10	0.2S	10
1200/5	140×50	0.5	10	0.5S/0.2	10	0.2S	10
1500/5	140×50	0.5	10	0.5S/0.2	10	0.2S	10
2000/5	140×50	0.5	20	0.5S/0.2	10	0.2S	10
2500/5	140×50	0.5	20	0.5S/0.2	10	0.2S	10
3000/5	140×50	0.5	20	0.5S/0.2	10	0.2S	10
1500/5	155×50	0.5	10	0.5S/0.2	10	0.2S	10
2000/5	155×50	0.5	20	0.5S/0.2	10	0.2S	10
2500/5	155×50	0.5	20	0.5S/0.2	10	0.2S	10
3000/5	155×50	0.5	20	0.5S/0.2	10	0.2S	10
4000/5	155×50	0.5	20	0.5S/0.2	10	0.2S	10
4500/5	155×50	0.5	20	0.5S/0.2	20	0.2S	10
5000/5	155×50	0.5	20	0.5S/0.2	20	0.2S	10
300/1	40×30	0.5	5-3.75	0.5S/0.2	5-3.75	0.2S	2.5
400/1	40×30	0.5	5-3.75	0.5S/0.2	5-3.75	0.2S	5-3.75
500/1	40×30	0.5	5-3.75	0.5S/0.2	5-3.75	0.2S	5-3.75
300/1	50×30	0.5	5-3.75	0.5S/0.2	5-3.75	0.2S	2.5
400/1	50×30	0.5	5	0.5S/0.2	5-3.75	0.2S	5-3.75
500/1	50×30	0.5	5	0.5S/0.2	5	0.2S	5-3.75
600/1	50×30	0.5	10	0.5S/0.2	5	0.2S	5-3.75
700/1	60×30	0.5	10	0.5S/0.2	5	0.2S	5-3.75
800/1	60×30	0.5	10	0.5S/0.2	5	0.2S	5
1000/1	60×30	0.5	10	0.5S/0.2	5	0.2S	5
600/1	60×50	0.5	10	0.5S/0.2	10	0.2S	5
750/1	60×50	0.5	10	0.5S/0.2	10	0.2S	10
800/1	60×50	0.5	10	0.5S/0.2	10	0.2S	10
1000/1	60×50	0.5	10	0.5S/0.2	10	0.2S	10
700/1	80×30	0.5	10	0.5S/0.2	10	0.2S	5
800/1	80×30	0.5	10	0.5S/0.2	10	0.2S	10
1000/1	80×30	0.5	10	0.5S/0.2	10	0.2S	10
800/1	80×50	0.5	10	0.5S/0.2	10	0.2S	5
1000/1	80×50	0.5	10	0.5S/0.2	10	0.2S	10
1200/1	80×50	0.5	10	0.5S/0.2	10	0.2S	10
1500/1	80×50	0.5	20	0.5S/0.2	10	0.2S	10
2000/1	80×50	0.5	20	0.5S/0.2	10	0.2S	10
2500/1	80×50	0.5	20	0.5S/0.2	10	0.2S	10
800/1	100×50	0.5	10	0.5S/0.2	10	0.2S	10
1000/1	100×50	0.5	10	0.5S/0.2	10	0.2S	10
1200/1	100×50	0.5	10	0.5S/0.2	10	0.2S	10
1500/1	100×50	0.5	10	0.5S/0.2	10	0.2S	10
1500/1	125×52	0.5	15	0.5S/0.2	10	0.2S	10
2000/1	125×52	0.5	20	0.5S/0.2	10	0.2S	10
2500/1	125×52	0.5	20	0.5S/0.2	10	0.2S	10

变比 Current ratio	孔径 Aperture	参数 Date（只能选择一个准确级）					
		准确级 Accuracy class	容量 (VA)rated output	准确级 Accuracy class	容量 (VA)rated output	准确级 Accuracy class	容量 (VA)rated output
3000/1	125×52	0.5	20	0.5S/0.2	10	0.2S	10
1000/1	140×50	0.5	20	0.5S/0.2	10	0.2S	10
1200/1	140×50	0.5	20	0.5S/0.2	10	0.2S	10
1500/1	140×50	0.5	20	0.5S/0.2	10	0.2S	10
2000/1	140×50	0.5	20	0.5S/0.2	10	0.2S	10
2500/1	140×50	0.5	20	0.5S/0.2	10	0.2S	10
3000/1	140×50	0.5	20	0.5S/0.2	10	0.2S	10
1500/1	155×50	0.5	20	0.5S/0.2	10	0.2S	10
2000/1	155×50	0.5	20	0.5S/0.2	10	0.2S	10
2500/1	155×50	0.5	20	0.5S/0.2	10	0.2S	10
3000/1	155×50	0.5	20	0.5S/0.2	10	0.2S	10
4000/1	155×50	0.5	20	0.5S/0.2	10	0.2S	10

型号 规格	窗口尺寸			外形尺寸			安装孔距 D	图示
	a	b	d	A	B	C		
LZK-0.66II 40×30	40	31	/	79	47	105	45	图一
LZK-0.66II 50×30	52	31	/	87	46	107	54	图一
LZK-0.66II 60×30	62	31	/	102.5	46	112	53	图一
LZK-0.66II 60×50	61	51	/	100	45	139.5	53.5	图一
LZK-0.66II 80×30	82	31	/	122	45	119	58	图一
LZK-0.66II 80×50	82	51.5	/	122	45	147	60	图一
LZK-0.66II 100×30	102	32	/	141	48	124	70	图一
LZK-0.66II 100×50	101	51	/	148.5	45	154	79	图一
LZK-0.66II 102×85	102	84.5	/	149	48	189	79	图一
LZK-0.66II 125×52	125	52	34.5	167	48	150	79.5	图二
LZK-0.66II 140×50	141	51	41	190	49	160	80.5	图二
LZK-0.66II 155×50	155	51	40.5	202	49	160.5	79.5	图二
LZK-0.66II 132×80	132	81	37.5	192	50	197	119	图二
LZK-0.66II 225×65	图三							

注：孔径尺寸误差+0.5mm，其余尺寸误差±2mm

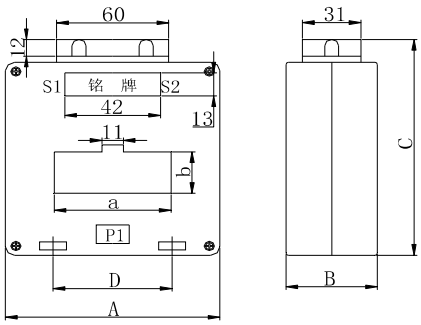

图一

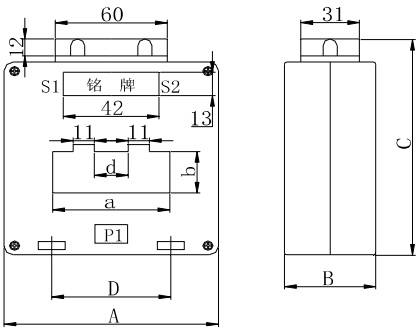

图二

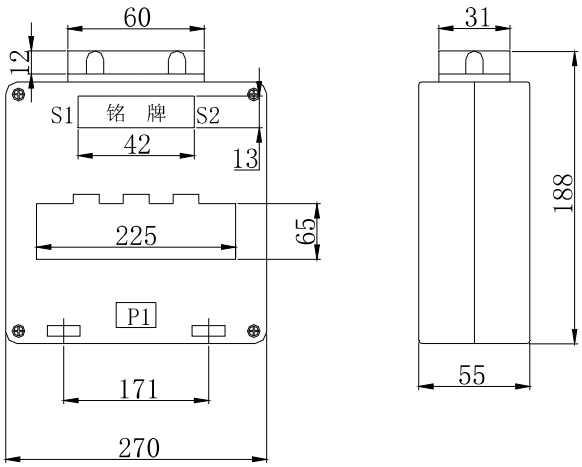

图三

配件示意图

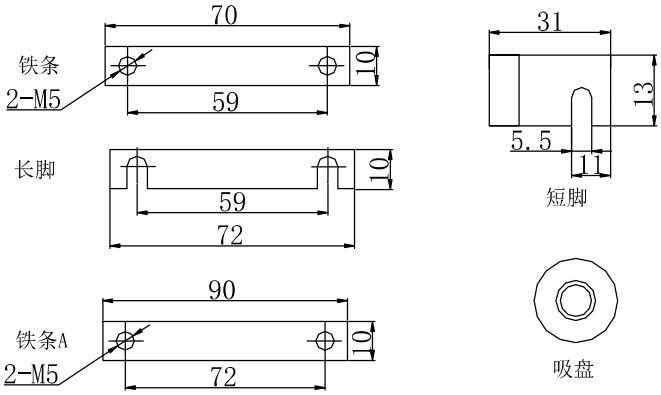

孔距误差尺寸±1mm，其余误差尺寸±2mm。

孔径与配件搭配如下

1、40×30孔、50×30孔、60×30孔、80×30孔、100×30孔

铁条	长脚	吸盘	M5×30 螺钉
1	2	2	2

2、60×50孔、80×50孔、100×50孔、102×85孔

铁条	长脚	吸盘	M5×50 螺钉
1	2	2	2

3、125×52孔、140×50孔 、155×50孔、132×80孔

铁条A	长脚	吸盘	M5×50 螺钉
2	2	4	4

4、225×65孔

铁条A	长脚	吸盘	M5×50 螺钉
3	2	6	6

四、户外互感器

JDZW-10 型电压互感器

电压比 Voltage ratio(V)	额定绝缘水平 Rated insulation(kV)	准确级及额定输出 Accuracy class and Rated output(VA)	极限输出 Max. output(VA)
10000/100	12/42/75	0.2—30 0.5—50	350
10000/100/220	12/42/75	0.5/3.0—20/300(3.0 级短时使用)	

外形尺寸图 Overall dimensions

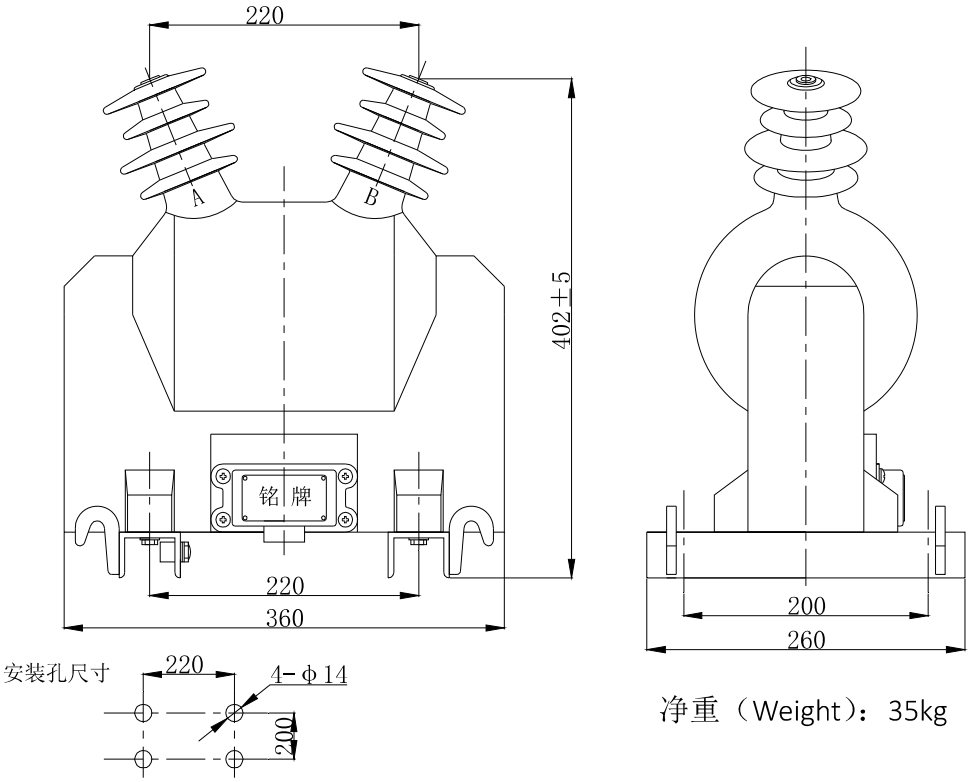

净重（Weight）：35kg

JDZW-10 型电压互感器参见接线图 1-图 4
Type JDZW-10 voltage transformer see figure1-figure4

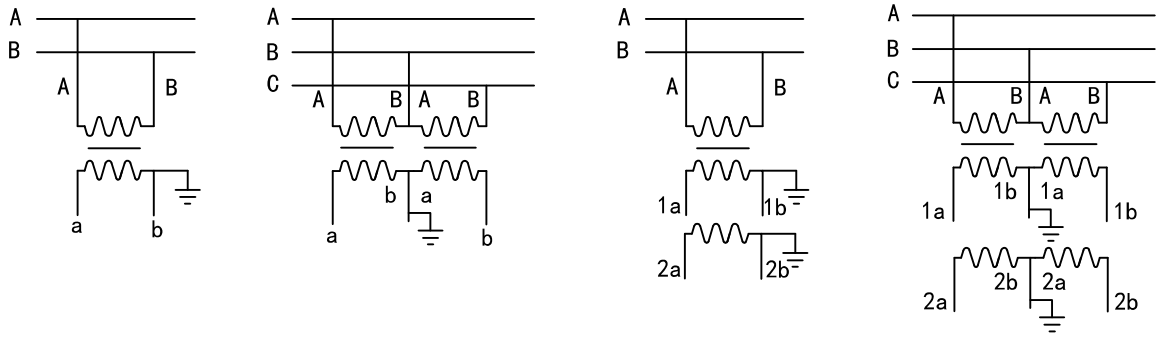

图 1 Figure1　图 2 Figure2　图 3 Figure3　图 4 Figure4

JDZW-35 型电压互感器

电压比 Voltage ratio(V)	额定绝缘水平 Rated insulation(kV)	准确级及额定输出 Accuracy class and Rated output(VA)	极限输出 Max. output(VA)
35000/100	40.5/95/200	0.2/75 0.5/200 1.0/350 3.0/650	1000（注：有两个测量级时对应第一个测量级）
35000/100, 100	40.5/95/200	0.2/0.5-40/50	

外形尺寸图 Overall dimensions

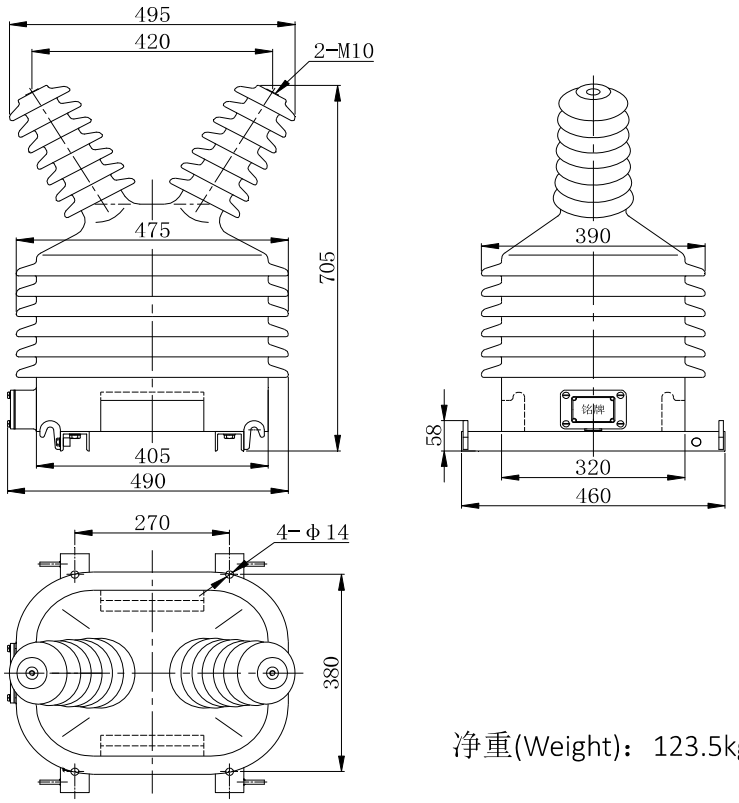

净重(Weight)：123.5kg

JDZW-35 型电压互感器参见接线图 1-图 4
Type JDZW-35 voltage transformer see figure1-figure4

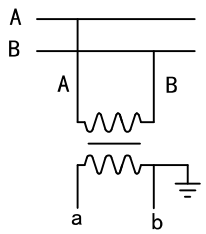

图 1
Figure1

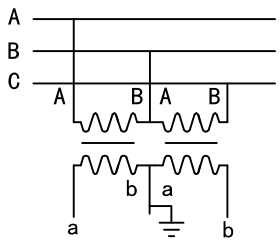

图 2
Figure2

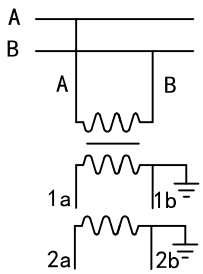

图 3
Figure3

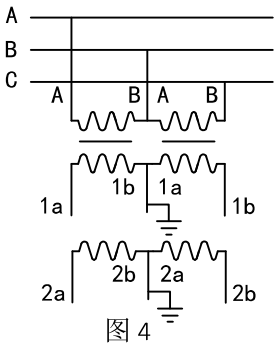

图 4
Figure4

JDZXW-10 型电压互感器

电压比 Voltage ratio(V)	额定绝缘水平 Rated insulation(kV)	准确级及额定输出 Accuracy class and Rated output(VA)	极限输出 Max. output(VA)
10000：√3/100：√3, 100:3	12/42/75	0.2/3P—30/50 0.5/3P—50/50	350
10000：√3/100：√3, 100:3	12/42/75		

外形尺寸图 Overall dimensions

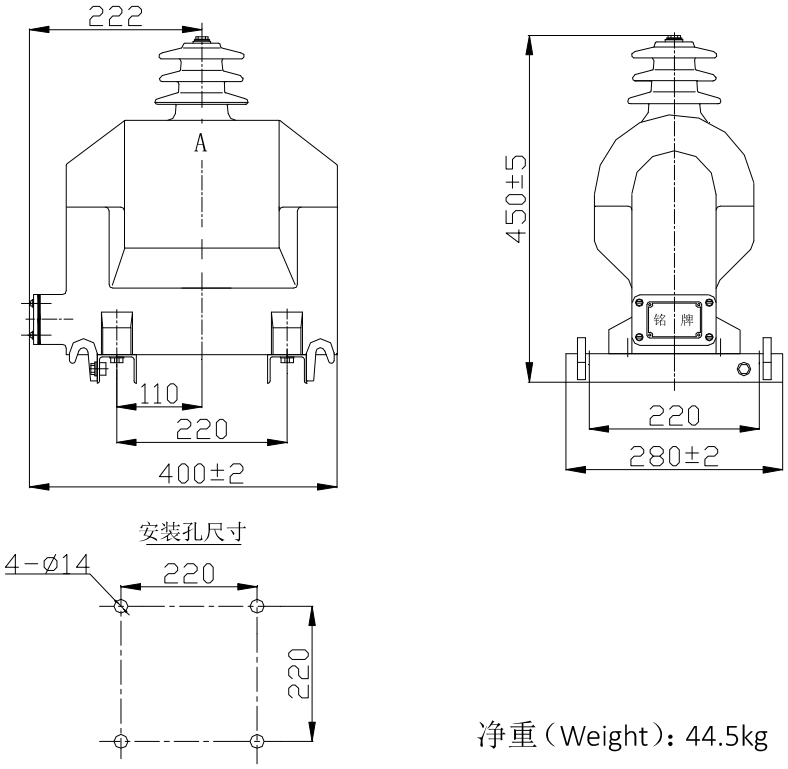

净重（Weight）：44.5kg

JDZXW-10 型电压互感器参见接线图 1
Type JDZXW-10 voltage transformation see figure1

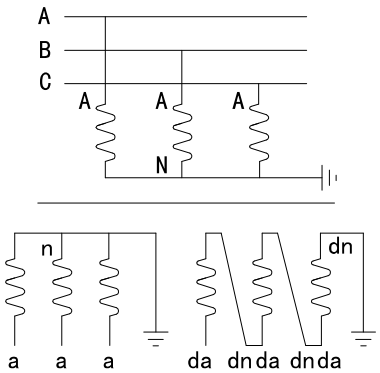

图 1
Figure1

JDZXW-35 型电压互感器

电压比 Voltage ratio(V)	额定绝缘水平 Rated insulation(kV)	准确级及额定输出 Accuracy class and Rated output(VA)	极限输出 Max. output(VA)
35000：√3/100：√3, 100:3	40.5/95/200	0.2/3P-45/100 0.2/6P-45/100 0.5/3P-100/100 0.5/6P-100/100 1.0/3P-200/100 1.0/6P-200/100	600(注：有两个测量级时对应第一个测量级)
35000：√3/110：√3, 110:3			
35000：√3/100：√3, 100：√3, 100:3	40.5/95/200	0.2/0.5/3P-30/30/100	
35000：√3/110：√3, 110：√3, 110:3		0.2/0.5/6P-30/30/100	

外形尺寸图 Overall dimensions

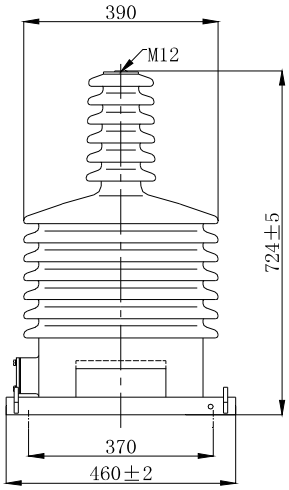

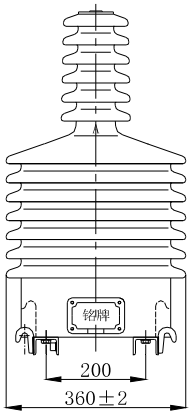

安装孔尺寸

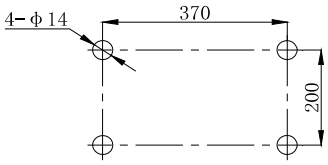

净重（Weight）：140kg

JDZXW-35 型电压互感器参见接线图 1-2

Type JDZXW-35 voltage transformation see figure1-2

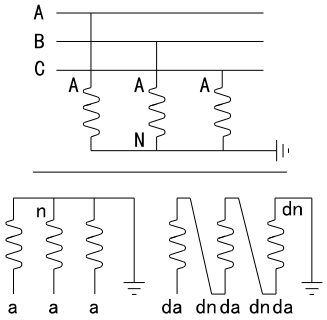

图 1（Figure1）

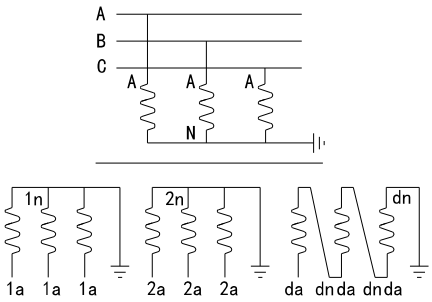

图 2（Figure2）

JZW2-10 型电压互感器

电压比 Voltage ratio(V)	额定绝缘水平 Rated insulation(kV)	准确级及额定输出 Accuracy class and Rated output(VA)	COS Φ
10000/100	12/42/75	0.2/45 或 0.5/100	0.8
10000/220		0.2/45 或 0.5/100 或 3.0/500	
10000/100，100		0.2/0.5 15/30	
10000/100，220		0.2/0.5 15/30 0.2/3.0 15/300（短时使用） 0.5/3.0 30/300（短时使用）	

外形尺寸图 Overall dimensions

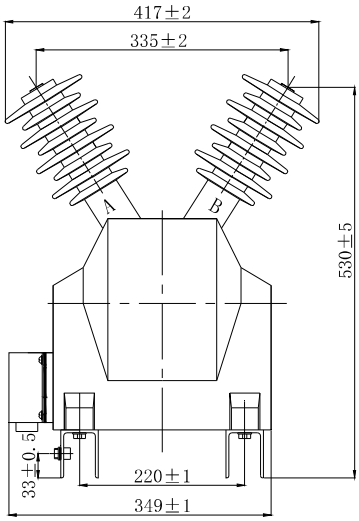

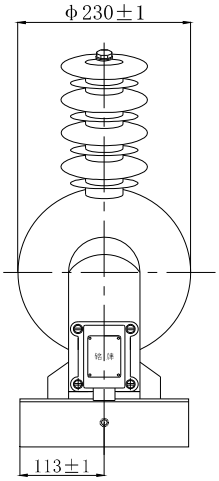

接线图 Wiring diagram

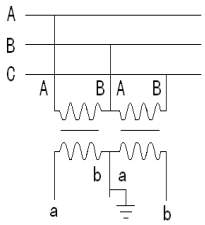

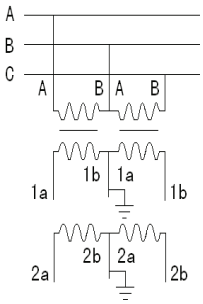

安装孔尺寸：

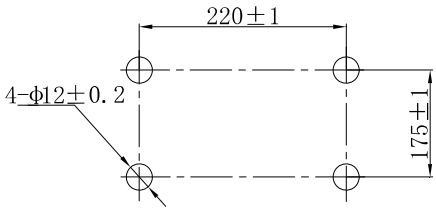

净重（Weight）：36.5kg

JZW3-10R2 型电压互感器

电压比 Voltage ratio(V)	额定绝缘水平 Rated insulation(kV)	准确级及额定输出 Accuracy class and Rated output(VA)	COS Φ
10000/100	12/42/75	0.2/45 或 0.5/100	0.8
10000/220		0.2/45 或 0.5/100 或 3.0/500	
10000/100，100		0.2/0.5　15/30	
10000/100，220		0.2/0.5　15/30 0.2/3.0　15/300（短时使用） 0.5/3.0　30/500（短时使用）	

外形尺寸图 Overall dimensions

A,B 相均可配熔断器

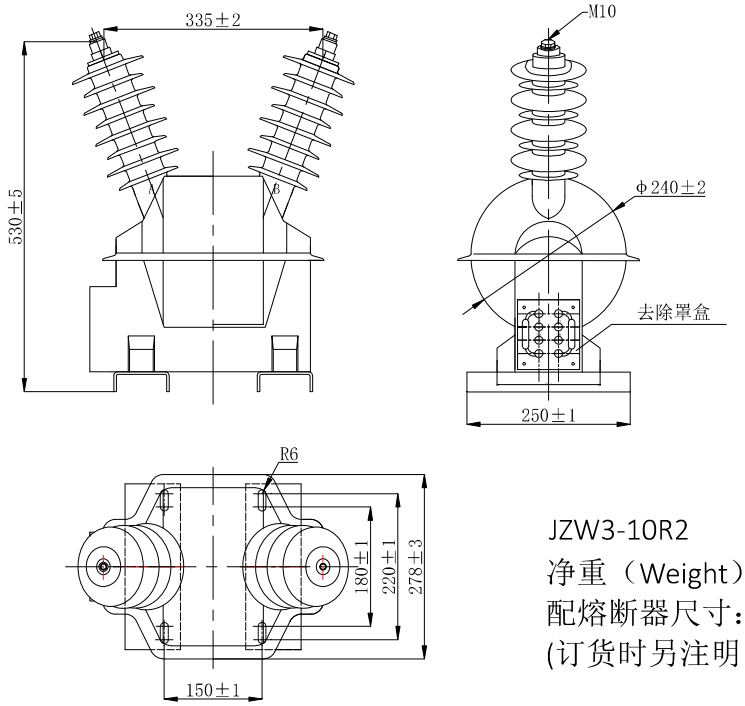

JZW3-10R2

净重（Weight）：36.5kg

配熔断器尺寸：Φ25mm×195mm

(订货时另注明，本体不配熔断器）

接线图 Wiring diagram

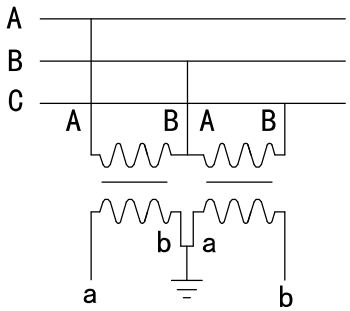

单绕组

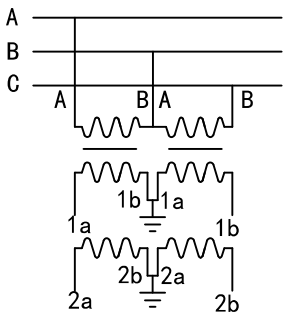

双绕组

JZW4-10-D(R2) 型电压互感器

电压比 Voltage ratio(V)	额定绝缘水平 Rated insulation(kV)	准确级及额定输出 Accuracy class and Rated output(VA)	COS Φ
10000/100	12/42/75	0.2/45 或 0.5/100	0.8
10000/220		0.2/45 或 0.5/100 或 3.0/500	
10000/100，100		0.2/0.5 15/30	
10000/100，220		0.2/0.5 15/30 0.2/3.0 15/300（短时使用） 0.5/3.0 30/500（短时使用）	

外形尺寸图 Overall dimensions

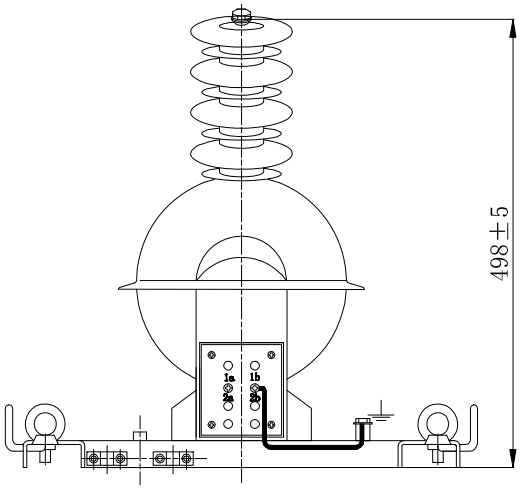

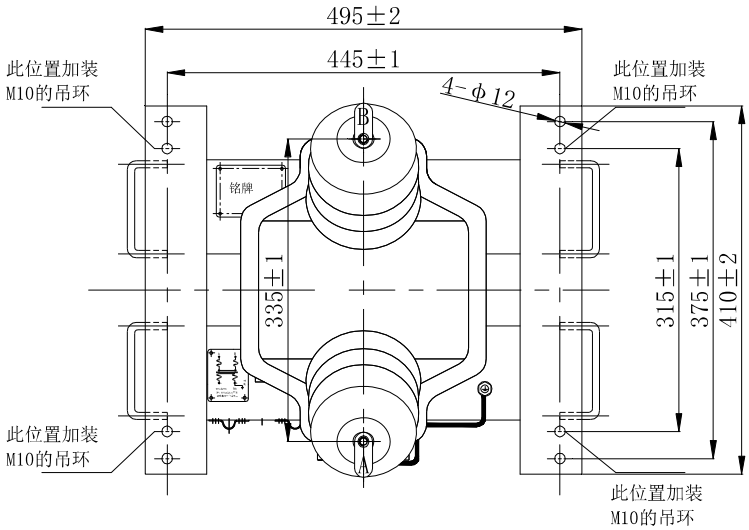

JZW4-10-D

净重（Weight）：36.5kg

A, B 相可配熔断器

JZW4-10-DR2
配熔断器尺寸： Φ25mm×195mm
(订货时另注明，本体不配熔断器）
净重（Weight）：36.5kg

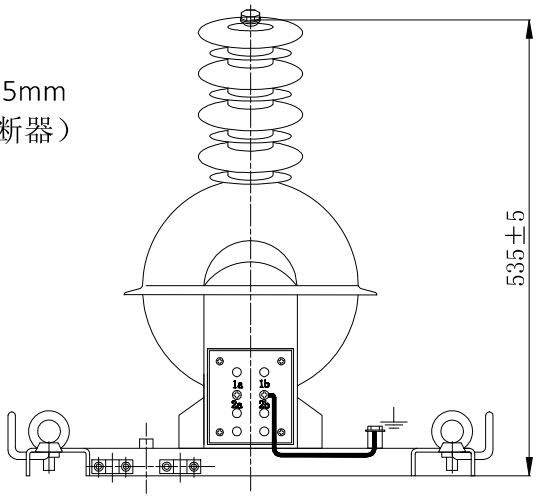

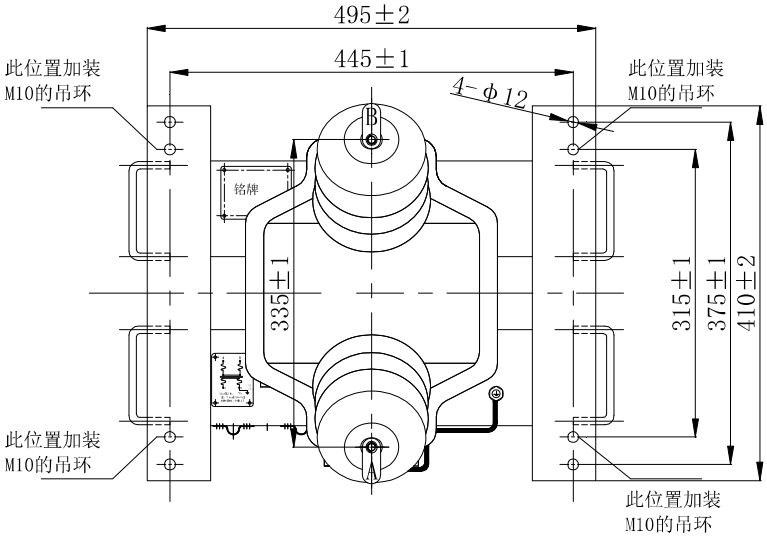

接线图 Wiring diagram

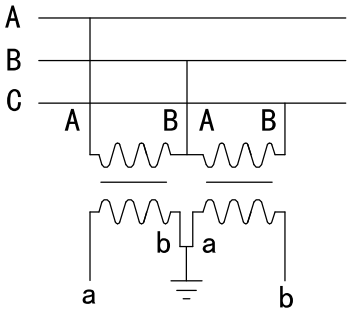

单绕组

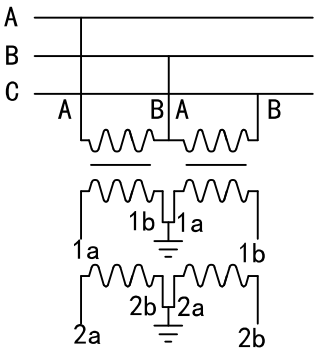

双绕组

JZW4-10-S（R2） 型电压互感器

电压比 Voltage ratio(V)	额定绝缘水平 Rated insulation(kV)	准确级及额定输出 Accuracy class and Rated output(VA)	COS Φ
10000/100	12/42/75	0.2/45 或 0.5/100	0.8
10000/220		0.2/45 或 0.5/100 或 3.0/500	
10000/100，100		0.2/0.5 15/30	
10000/100，220		0.2/0.5 15/30 0.2/3.0 15/300（短时使用） 0.5/3.0 30/300（短时使用）	

外形尺寸图 Overall dimensions

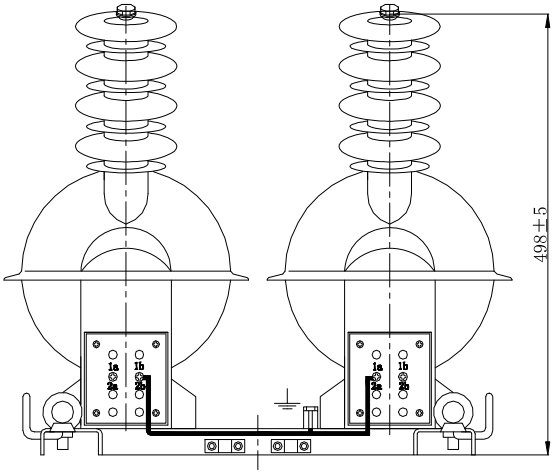

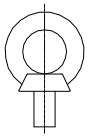

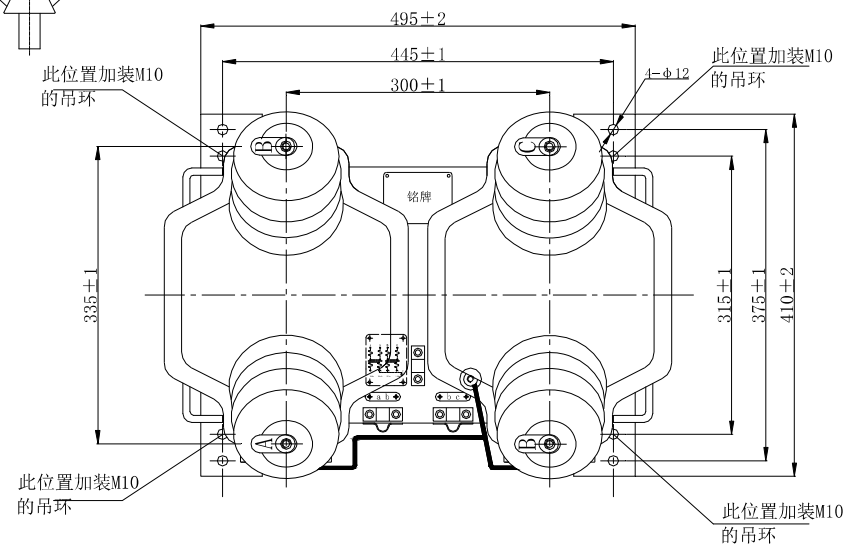

JZW4-10-S

净重（Weight）：78kg

接线图 Wiring diagram

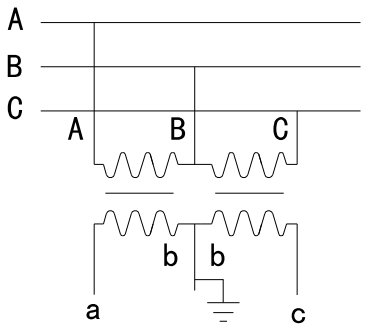

单绕组

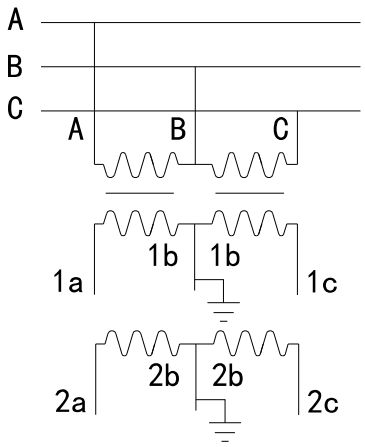

双绕组

A, B 相均可配熔断器

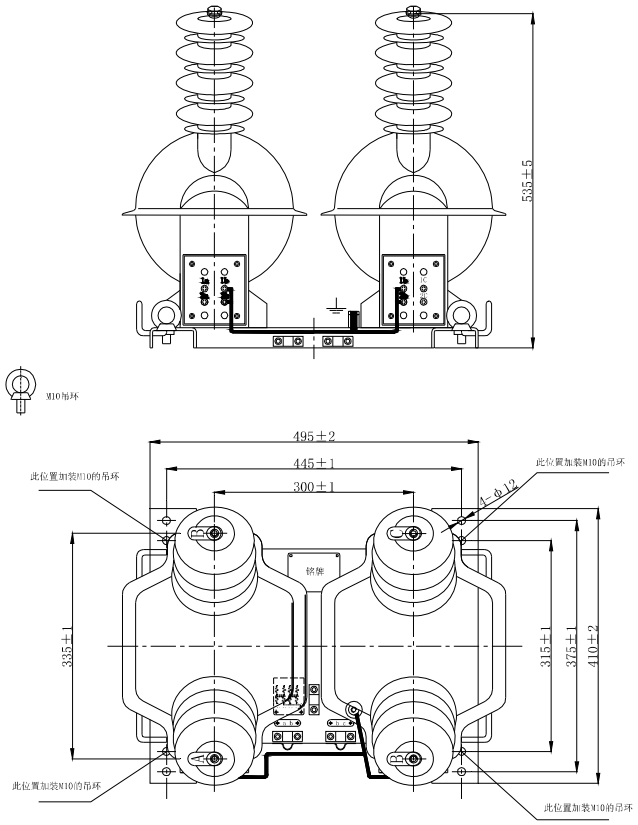

JZW4-10-SR2　　净重（Weight）：78kg

配熔断器尺寸：Φ25mm×195mm
(订货时另注明，本体不配熔断器）

LMZW2-0.5 电流互感器

额定一次电流 Rated primary current(A)	准确级组合/负荷 Accuracy classes/Rated output(VA)
1200(600)/1	5P10/15
200/1	10P10/10

外形尺寸图

Overall dimensions

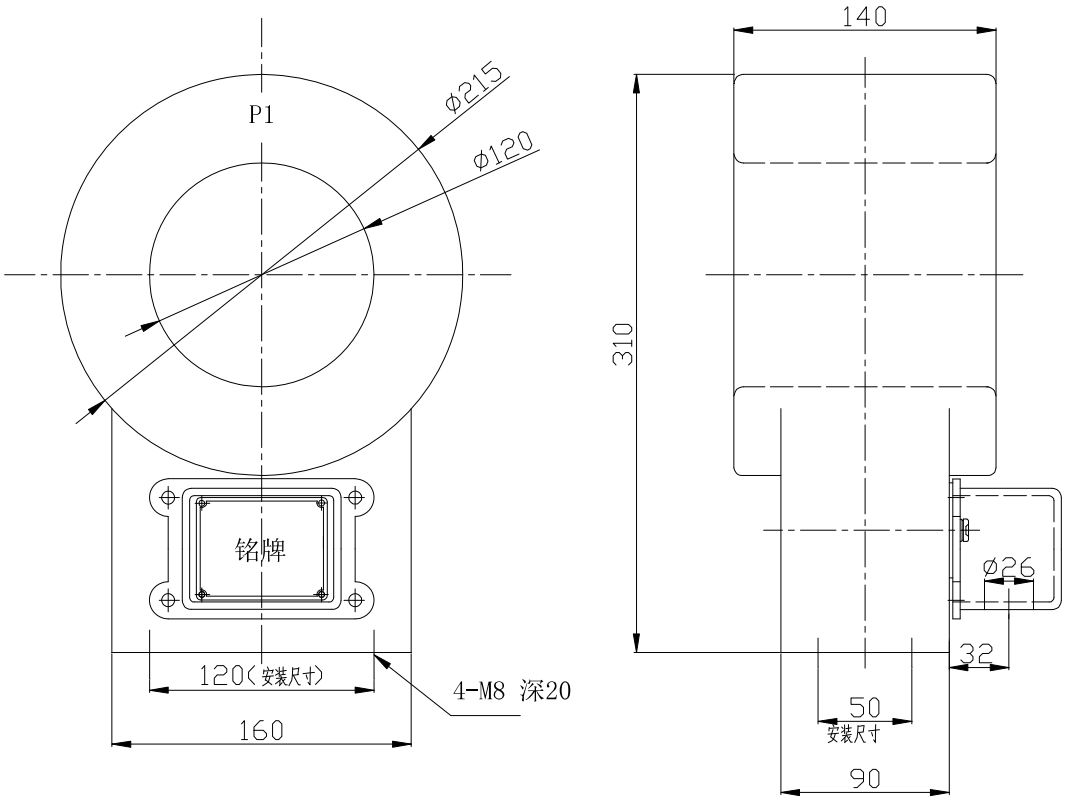

净重(Weight)：10kg

LMZW-0.5 电流互感器

额定一次电流 Rated primary current(A)	额定二次电流 Rated secondary current (A)	准确级组合/负荷 Accuracy classes/Rated output(VA)
250	1/5	0.5S/10
300-400	1/5	
600	1/5	

外形尺寸图 Overall dimensions

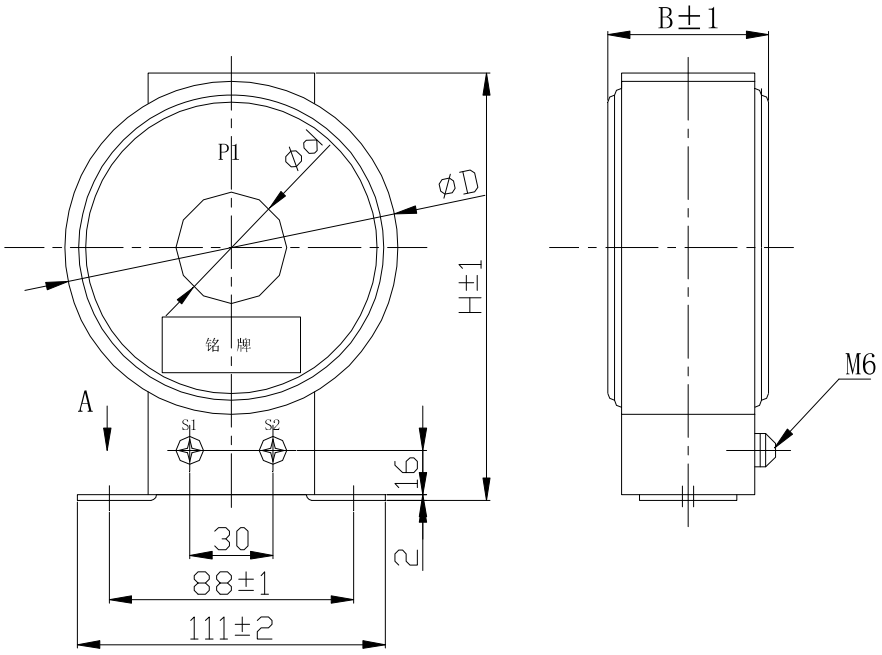

A 安装孔

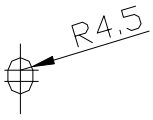

净重(Weight)：2kg

额定一次电流（A）	Φd	ΦD	H	B
250	40	120	154	58
300	45	112	146	58
400～600	60	130	169	65

LZZBJ9-35W 型电流互感器

额定一次电流 Rated primary current (A)	额定二次电流 Rated secondary current (A)	准确级组合 Accuracy classes combination	额定输出 Rated output (VA)	额定短时热电流 Rated short-time thermal current (kA/s)	额定动稳定电流 Rated dynamic current (kA)
100～600 区间	1/5	0.2S/5P10/5P10	100/100/100	100I1n/1	250I1n
		0.2S/5P20/5P20	50/50/50		
		0.2S/5P30/5P30	30/30/30		
		0.2S/0.5S/5P10/5P10	80/80/80/80		
		0.2S/0.5S/5P20/5P20	40/40/40/40		
		0.2S/0.5S/5P30/5P30	30/30/30/30		
750～800 区间		0.2S/5P10/5P10	120/120/120	40/4	100
		0.2S/5P20/5P20	60/60/60		
		0.2S/5P30/5P30	40/40/40		
		0.2S/0.5S/5P10/5P10	100/100/100/100		
		0.2S/0.5S/5P20/5P20	50/50/50/50		
		0.2S/0.5S/5P30/5P30	40/40/40/40		
1000		0.2S/5P10/5P10	150/150/150	40/4	100
		0.2S/5P20/5P20	80/80/80		
		0.2S/5P30/5P30	50/50/50		
		0.2S/0.5S/5P10/5P10	120/120/120/120		
		0.2S/0.5S/5P20/5P20	60/60/60/60		
		0.2S/0.5S/5P30/5P30	45/45/45/45		
1200～1600 区间		0.2S/5P10/5P10	150/150/150	50/4	125
		0.2S/5P20/5P20	80/80/80		
		0.2S/5P30/5P30	50/50/50		
		0.2S/0.5S/5P10/5P10	120/120/120/120		
		0.2S/0.5S/5P20/5P20	60/60/60/60		
		0.2S/0.5S/5P30/5P30	45/45/45/45		
2000		0.2S/5P10/5P10	200/200/200	50/4	125
		0.2S/5P20/5P20	100/100/100		
		0.2S/5P30/5P30	80/80/80		
		0.2S/0.5S/5P10/5P10	200/200/200/200		
		0.2S/0.5S/5P20/5P20	90/90/90/60		
		0.2S/0.5S/5P30/5P30	50/50/50/50		

外形尺寸图 Overall dimensions

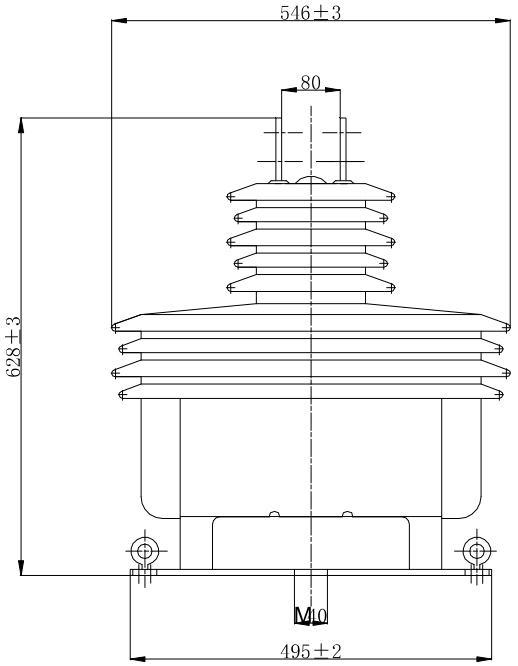

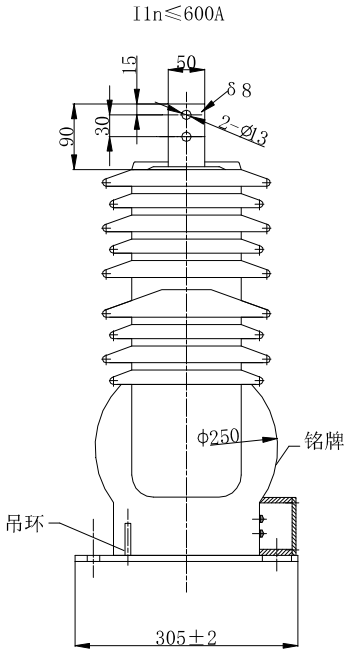

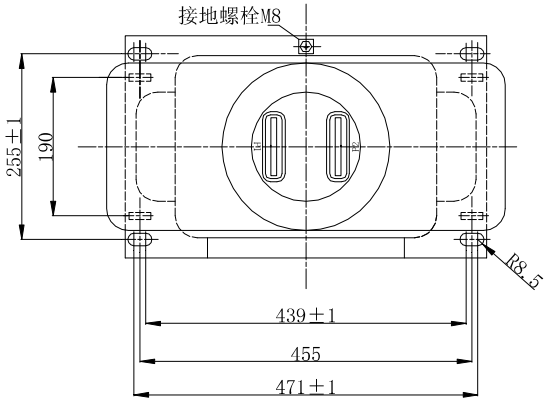

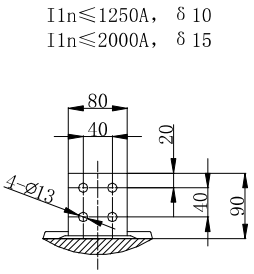

LZZBJ9-35W

净重（Weight）：100kg

LZZBW1-35 型电流互感器

额定一次电流 Rated primary current (A)	额定二次电流 Rated secondary current (A)	准确级组合 Accuracy classes combination	额定输出 Rated output (VA)	额定短时热电流 Rated short-time thermal current (kA/1s)	额定动稳定电流 Rated dynamic current (kA)
30	1/5	0.2/5P10	30/60	6	15
		0.5/10P10	30/60	6	15
		0.2/5P20	30/30	6	15
		0.5/10P20	30/30	6	15
40		0.2/5P10	30/60	7	18
		0.5/10P10	30/60	7	18
		0.2/5P20	30/30	7	18
		0.5/10P20	30/30	7	18
50		0.2/5P10	30/60	10	25
		0.5/10P10	30/60	10	25
		0.2/5P20	30/30	10	25
		0.5/10P20	30/30	10	25
75		0.2/5P10	30/60	20	50
		0.5/10P10	30/60	20	50
		0.2/5P20	30/30	20	50
		0.5/10P20	30/30	20	50
100		0.2/5P10	30/60	20	50
		0.5/10P10	30/60	20	50
		0.2/5P20	30/30	20	50
		0.5/10P20	30/30	20	50
200		0.2/5P10	30/60	31.5	80
		0.5/10P10	30/60	31.5	80
		0.2/5P20	30/30	31.5	80
		0.5/10P20	30/30	31.5	80
300		0.2/5P10	30/60	40	100
		0.5/10P10	30/60	40	100
		0.2/5P20	30/30	40	100
		0.5/10P20	30/30	40	100
400		0.2/5P10	30/60	45	113
		0.5/10P10	30/60	45	113
		0.2/5P20	30/30	45	113
		0.5/10P20	30/30	45	113

注： 如顾客要求的参数超出上表范围，可与我公司协商后确定。

Note： If user's data go beyond the above-mentioned scopes，they may be subject to an agreement between manufacturer and purchaser.

外形尺寸图 Overall dimensions

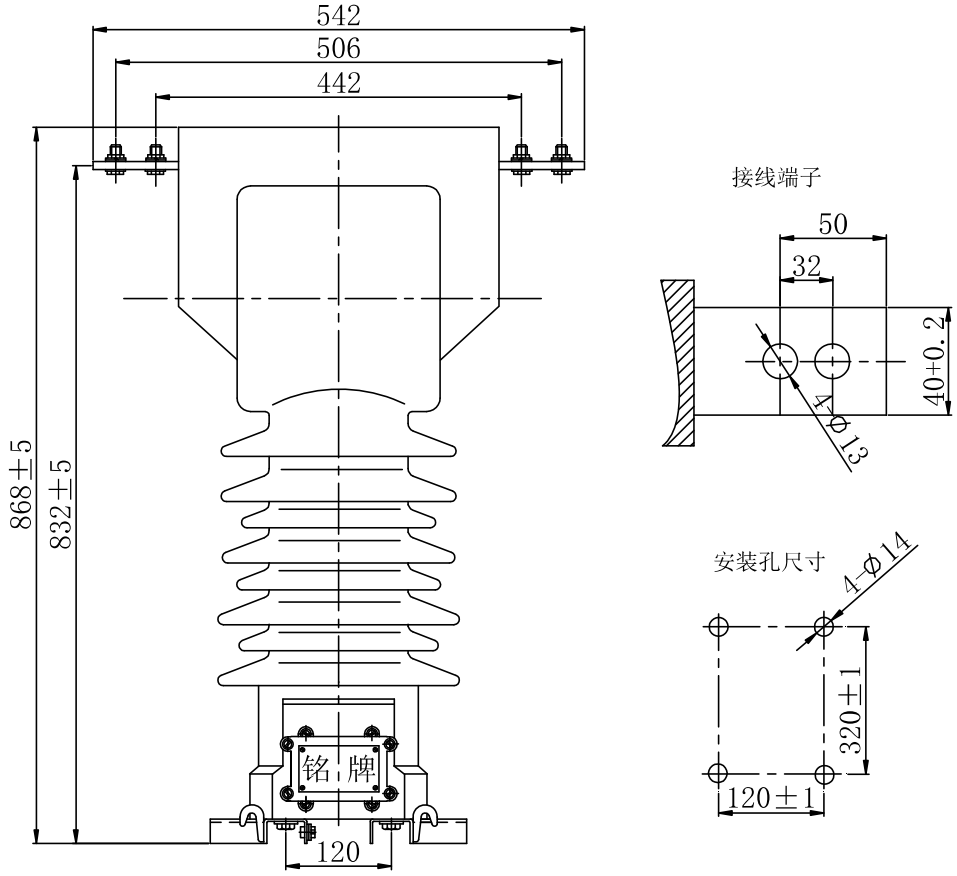

净重（Weight ）：87.5kg

LZZBW2-10 电流互感器

额定一次电流 Rated primary current (A)	额定二次电流 Rated secondary current (A)	准确级组合 Accuracy classes combination	额定输出 Rated output (VA)	额定短时热电流 Rated short-time thermal current (kA/1s)	额定动稳定电流 Rated dynamic current (kA)
30	1/5	0.2/0.5/5P10	20/20/30	6	15
		0.2/5P10/5P10	20/30/30	6	15
		0.2/0.5/5P20	20/20/15	6	15
		0.2/5P20/5P20	20/15/15	6	15
40		0.2/0.5/5P10	20/20/30	7	18
		0.2/5P10/5P10	20/30/30	7	18
		0.2/0.5/5P20	20/20/15	7	18
		0.2/5P20/5P20	20/15/15	7	18
50		0.2/0.5/5P10	20/20/30	10	25
		0.2/5P10/5P10	20/30/30	10	25
		0.2/0.5/5P20	20/20/15	10	25
		0.2/5P20/5P20	20/15/15	10	25
75		0.2/0.5/5P10	20/20/30	20	50
		0.2/5P10/5P10	20/30/30	20	50
		0.2/0.5/5P20	20/20/15	20	50
		0.2/5P20/5P20	20/15/15	20	50
100		0.2/0.5/5P10	20/20/30	20	50
		0.2/5P10/5P10	20/30/30	20	50
		0.2/0.5/5P20	20/20/15	20	50
		0.2/5P20/5P20	20/15/15	20	50
200		0.2/0.5/5P10	20/20/30	31.5	80
		0.2/5P10/5P10	20/30/30	31.5	80
		0.2/0.5/5P20	20/20/15	31.5	80
		0.2/5P20/5P20	20/15/15	31.5	80
300		0.2/0.5/5P10	20/20/30	40	100
		0.2/5P10/5P10	20/30/30	40	100
		0.2/0.5/5P20	20/20/15	40	100
		0.2/5P20/5P20	20/15/15	40	100
400		0.2/0.5/5P10	20/20/30	45	113
		0.2/5P10/5P10	20/30/30	45	113
		0.2/0.5/5P20	20/20/15	45	113
		0.2/5P20/5P20	20/15/15	45	113
500		0.2/0.5/5P10	20/30/30	55	138
		0.2/5P10/5P10	20/30/30	55	138
		0.2/0.5/5P20	20/30/15	55	138
		0.2/5P20/5P20	20/15/15	55	138
600		0.2/0.5/5P10	20/30/40	55	138
		0.2/5P10/5P10	20/30/40	55	138
		0.2/0.5/5P20	20/30/20	55	138
		0.2/5P20/5P20	20/15/20	55	138
800		0.2/0.5/5P10	30/30/40	55	138
		0.2/5P10/5P10	20/40/40	55	138
		0.2/0.5/5P20	30/30/20	55	138
		0.2/5P20/5P20	20/20/20	55	138
1000		0.2/0.5/5P10	30/30/60	70	175
		0.2/5P10/5P10	20/60/60	70	175
		0.2/0.5/5P20	30/30/30	70	175
		0.2/5P20/5P20	20/30/30	70	175

外形尺寸图 Overall dimensions

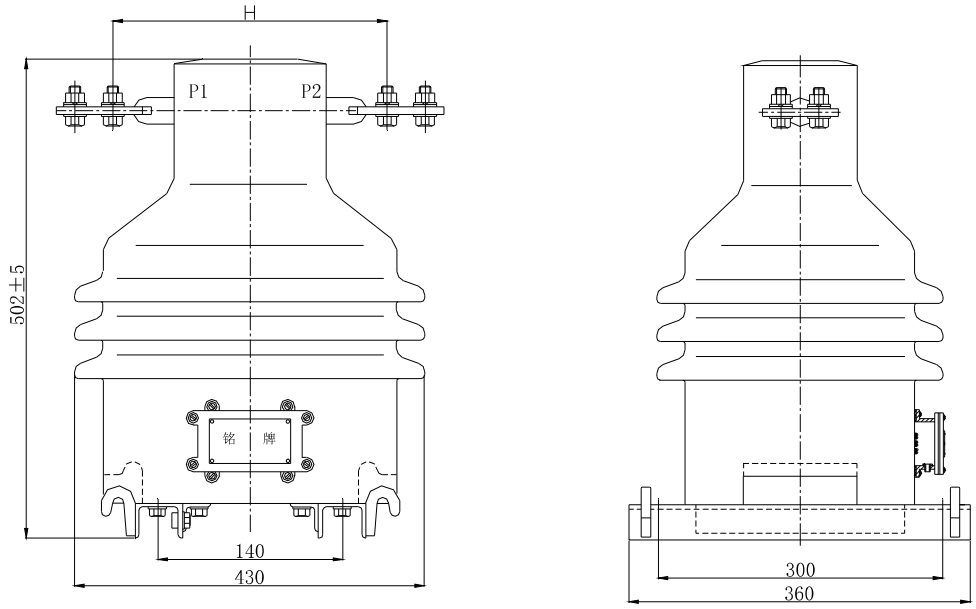

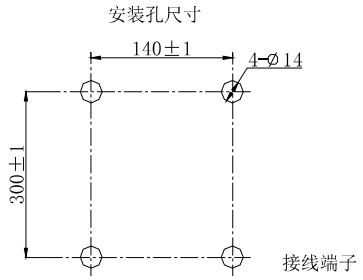

一次电流(A)	H
30-600	450
800	410
1000	460

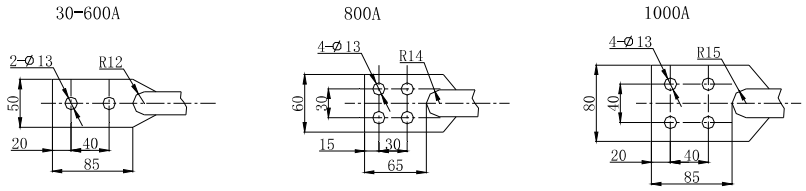

LZZBW2-10

净重（Weight）：85kg

LZZBW2-35 型电流互感器

额定一次电流 Rated primary current (A)	额定二次电流 Rated secondary current (A)	准确级组合 Accuracy classes combination	额定输出 Rated output (VA)	额定短时热电流 Rated short-time thermal current (kA/1s)	额定动稳定电流 Rated dynamic current (kA)
500	1/5	0.2/5P10	30/60	55	138
		0.5/10P10	30/60	55	138
		0.2/5P20	30/30	55	138
		0.5/10P20	30/30	55	138
600		0.2/5P10	30/60	55	138
		0.5/10P10	30/60	55	138
		0.2/5P20	30/30	55	138
		0.5/10P20	30/30	55	138
800		0.2/5P10	30/80	55	138
		0.5/10P10	30/80	55	138
		0.2/5P20	30/40	55	138
		0.5/10P20	30/40	55	138
1000		0.2/5P10	30/100	70	175
		0.5/10P10	30/100	70	175
		0.2/5P20	30/50	70	175
		0.5/10P20	30/50	70	175
1200		0.2/5P10	30/100	70	175
		0.5/10P10	30/100	70	175
		0.2/5P20	30/50	70	175
		0.5/10P20	30/50	70	175
1500		0.2/5P10	30/100	70	175
		0.5/10P10	30/100	70	175
		0.2/5P20	30/50	70	175
		0.5/10P20	30/50	70	175
2000		0.2/5P10	30/120	70	175
		0.5/10P10	30/120	70	175
		0.2/5P20	30/60	70	175
		0.5/10P20	30/60	70	175

注： 如顾客要求的参数超出上表范围，可与我公司协商后确定。
Note: If user's data go beyond the above-mentioned scopes, they may be subject to an agreement between manufacturer and purchaser.

外形尺寸图 Overall dimensions

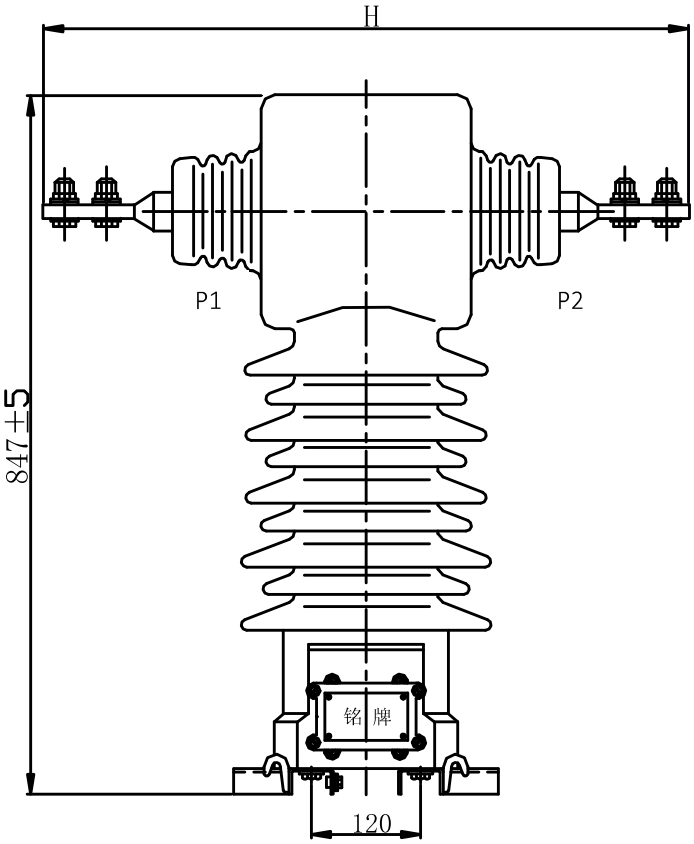

接线端子

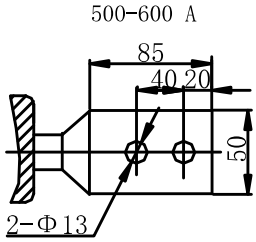

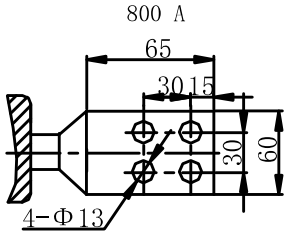

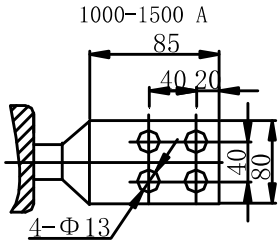

安装孔尺寸

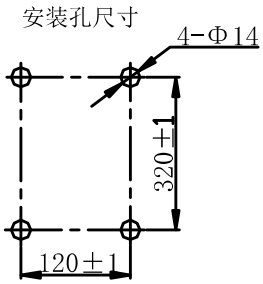

一次电流（A）	H(mm)
500-600	710
800	670
1000-1500	710
2000	750

2000 A

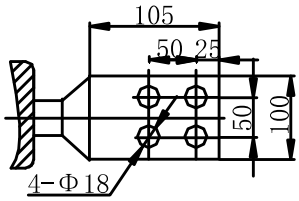

LZZBW2-35 电流互感器

净重（Weight）：100kg

JZW6-10R2 型电压互感器

电压比 Voltage ratio(V)	额定绝缘水平 Rated insulation(kV)	准确级及额定输出 Accuracy class and Rated output(VA)	COS Φ
10000/100	12/42/75	0.2/45 或 0.5/100	0.8
10000/220		0.2/45 或 0.5/100 或 3.0/500	
10000/100，100		0.2/0.5 15/30	
10000/100，220		0.2/0.5 15/30 0.2/3.0 15/300（短时使用） 0.5/3.0 30/500（短时使用）	

外形尺寸图 Overall dimensions： A,B 相均可配熔断器

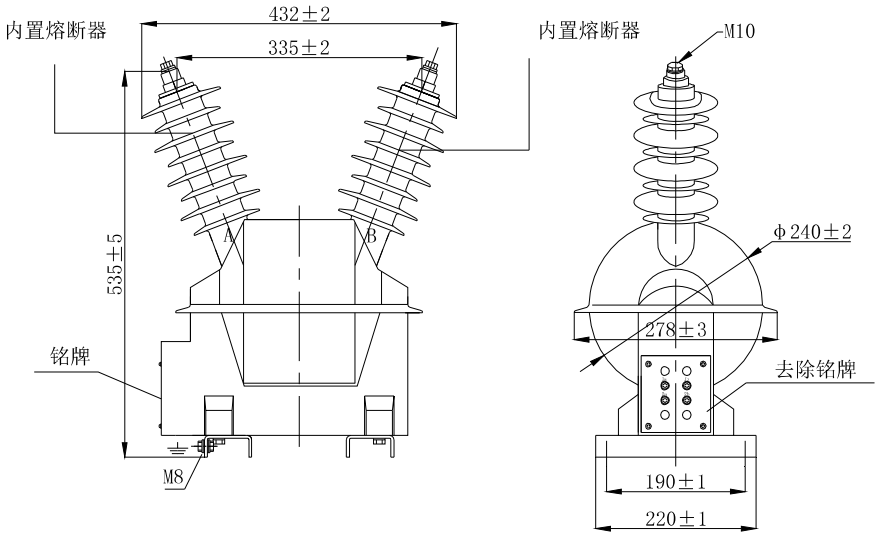

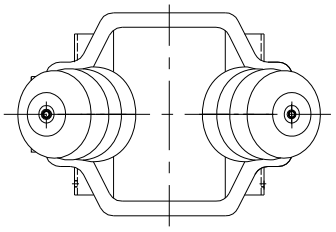

安装尺寸：

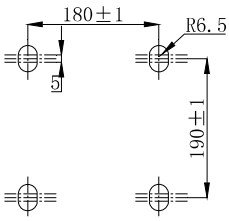

净重（Weight）：36.5kg
配熔断器尺寸： Φ25mm×195mm
(订货时另注明，本体不配熔断器)

JZW6-10R2 型电压互感器参见接线图 1-图 4 Type JZW6-10R2 voltage transformer see figure1-figure4

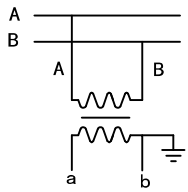

图 1
Figure1

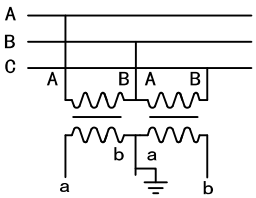

图 2
Figure2

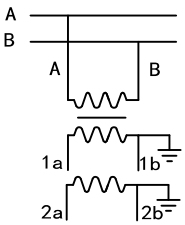

图 3
Figure3

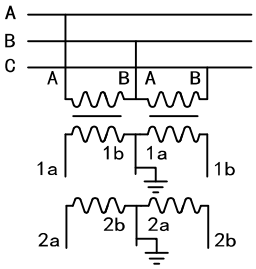

图 4
Figure4

JZW7-10R2 型电压互感器

电压比 Voltage ratio(V)	额定绝缘水平 Rated insulation(kV)	准确级及额定输出 Accuracy class and Rated output(VA)	COS Φ
10000/100	12/42/75	0.2/20 或 0.5/100	0.8
10000/220		0.2/20 或 0.5/100 或 3.0/500	
10000/100，220		0.5/3.0　30/300	

外形尺寸图 Overall dimensions：　A,B 相均可配熔断器

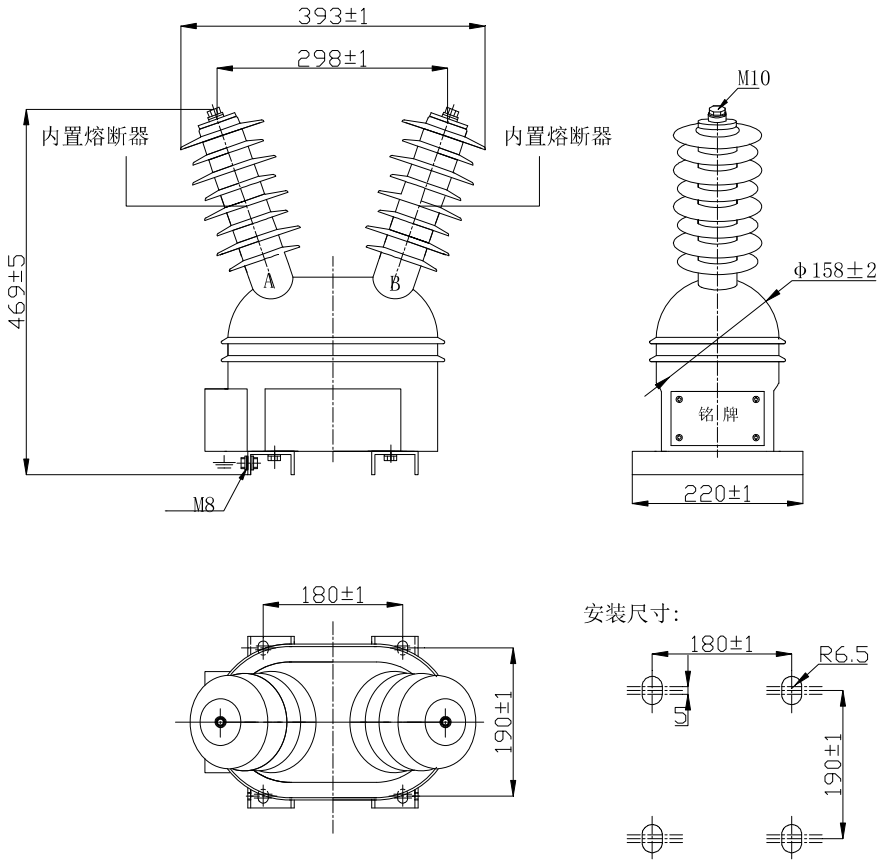

净重（Weight）：32kg
配熔断器尺寸：Φ25mm×195mm
(订货时另注明，本体不配熔断器）

JZW7-10R2 型电压互感器参见接线图 1-图 4　　Type JZW7-10R2 voltage transformer see figure1-figure4

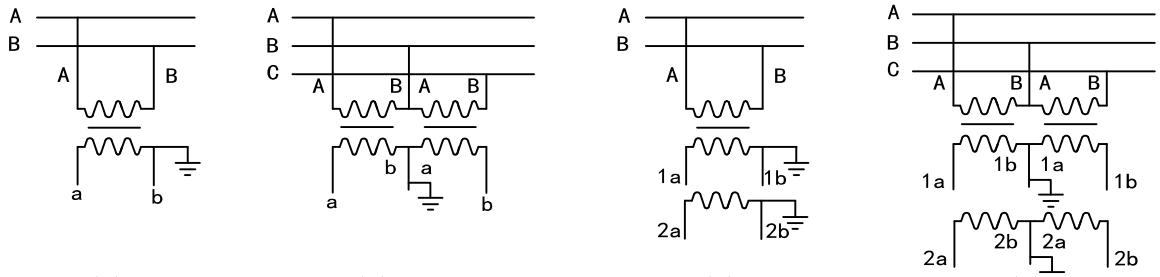

图 1　　图 2　　图 3　　图 4

Figure1　　Figure2　　Figure3　　Figure4

五、计量手车

计量手车

计量手车（带电流互感器、电压互感器、熔断器）供额定电压 10kV，额定电流 1250A 及以下的铠装金属封闭式（手车式）开关设备，如 GZS1、KYN 等中置式手车柜使用。

专用电流互感器

表 1

型号 Type	额定一次电流 Rated primary current (A)	准确级组合 Accuracy classes combination	额定输出 Rated output (VA)	额定短时热电流 Rated short-time thermal current (kA/1s)	额定动稳定电流 Rated dynamic current (kA)
LZZBJ9-10C3	20-300 400 500-600	0.2/10P10 0.2/0.5	10/15 10/15	80I1n	200I1n
	800-1000 1200-1250	0.2/0.5 0.2/10P15	10/15 15/20	45	113

专用电压互感器

表 2

型号 Type	电压比 Voltage ratio(V)	额定绝缘水平 Rated insulation(kV)	准确级及额定输出 Accuracy class and Rated output(VA)	极限输出 Max. output(VA)
JDZ10-10DA JDZ10-10DC	10000/100	0.2 0.5	15 30	300

外形尺寸图 Overall dimensions

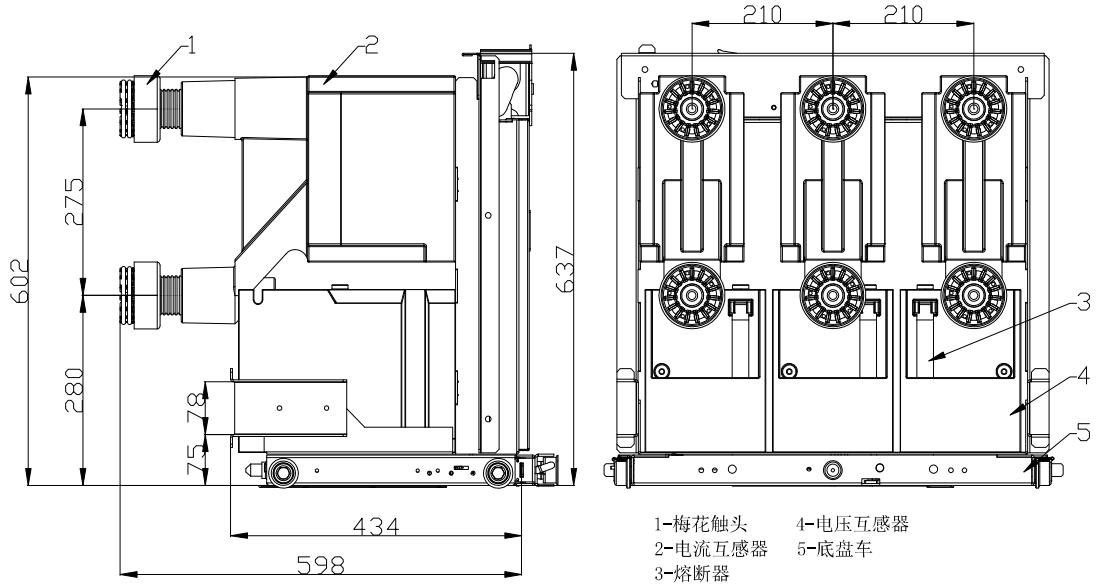

计量手车

净重（Weight）：176.5kg